C: Dir., Department of Public Works

City of NORFOLK

To the Honorable Council
City of Norfolk, Virginia

February 25, 2014

From: John M. Keifer, Director of Public Works

Subject: Encroach into Brooke Avenue right-of-way 12' with a 5'-3" wide canopy, the bottom of which will be 8' above the sidewalk at 116 Brooke Avenue.

Reviewed: Ronald H. Williams, Jr., Assistant City Manager

Ward/Superward: 2/6

Approved: Marcus D. Jones, City Manager

Item Number: R-5

I. **Recommendation:** Adopt Ordinance

II. **Applicant:** Byrd & Baldwin Brothers, L.L.C.
116 Brooke Avenue
Norfolk, Virginia 23510

III. **Description**

This agenda item is an encroachment to permit Byrd & Baldwin Brothers, L.L.C. to encroach into Brooke Avenue right-of-way 12' with a 5'-3" wide canopy, the bottom of which will be 8' above the sidewalk at 116 Brooke Avenue.

IV. **Analysis**

An encroachment is an object or structure that infringes into the City of Norfolk's right-of-way or property. Norfolk City Code, Section 42-10, requires all encroachments into the right-of-way to be approved by City Council. The encroachment in this location will allow Byrd & Baldwin Brothers, L.L.C. to install an entrance canopy into its place of business at 116 Brooke Avenue.

V. **Financial Impact**

Liability insurance has been provided naming the City of Norfolk as additional insured in the amount of $500,000; therefore, there should be no financial risk to the City. The City of Norfolk did not charge a fee for this encroachment.

810 Union Street #1101 ▪ Norfolk, Virginia 23510
Phone: 757-664-4242 ▪ Fax: 757-664-4239

VI. Environmental

There is no negative environmental impact associated with this action.

VII. Community Outreach/Notification

Public notification for this agenda item was conducted through the City of Norfolk's agenda notification process.

VIII. Board/Commission Action

The Department of Public Works, the Department of Planning & Community Development, and the City Attorney's Office has reviewed this request for encroachment and offer no objections. The encroachment was reviewed and recommended by the Norfolk Design Review Committee and the City Planning Commission.

IX. Coordination/Outreach

This letter has been coordinated with Department of Public Works, the Department of Planning & Community Development, and the City Attorney's Office.

Supporting Material from the Department of Public Works:

- Ordinance
- Exhibit A (2 sheets)

mr1/21/2014

Form and Correctness Approved:

By _____
Office of the City Attorney

Contents Approved:

By _____
DEPT.

NORFOLK, VIRGINIA

ORDINANCE No.

AN ORDINANCE PERMITTING BYRD & BALDWIN BROTHERS, L.L.C. TO ENCROACH INTO THE BROOKE AVENUE RIGHT-OF-WAY 12′ WITH A 5′-3′ WIDE CANOPY, THE BOTTOM OF WHICH WILL BE 8′ ABOVE THE SIDEWALK AT 116 BROOKE AVENUE.

- - -

BE IT ORDAINED by the Council of the City of Norfolk:

Section 1:- That permission is hereby granted to Byrd & Baldwin Brothers, L.L.C. ("Owner") to encroach into the Brooke Avenue right-of-way 12′ with a 5′-3′ wide canopy, the bottom of which will be 8′ above the sidewalk at 116 Brooke Avenue, as shown on Exhibit A attached hereto, such permission being further subject to the following conditions:

(1) That this permission is expressly subject to the right of revocation by the Council and that in the event of such revocation Owner, or its successors and assigns, shall immediately remove the encroaching structure.

(2) That upon the removal of the encroaching structure or any part thereof the authority hereby granted shall cease and terminate.

(3) That Owner, or its successors and assigns, at its own cost and expense, shall take out and keep in full force and effect public liability insurance in some company authorized to do business in the Commonwealth of Virginia, insuring it and naming the City of Norfolk as an additional insured in the minimum amounts of $500,000.00 against liability from any and all claims, actions and suits that may be asserted or brought against the City of Norfolk and/or Owner, and its successors and assigns, for any injury to or death of any person or persons or for any damage to or destruction of property resulting from the installation, maintenance, or existence of said

encroaching structure; that evidence of such insurance shall be filed with the Director of Risk Management of the City of Norfolk.

(4) That the City of Norfolk shall not be responsible for any damage to the encroaching structure, including replacement and reinstallation costs, resulting from the City's operation, maintenance, repair, or replacement of any utilities located in the right-of-way of Brooke Avenue.

Section 2:- That the failure of Owner, or its successors and assigns, to fully comply with all contingencies set forth herein shall operate as an automatic revocation of the permission granted hereby.

Section 3:- That the use of the said encroaching structure shall be deemed an acceptance by Owner, and its successors and assigns, of all conditions to which the permission herein granted is subject.

Section 4:- That this ordinance shall be in effect from and after its adoption.

EXHIBIT

A.

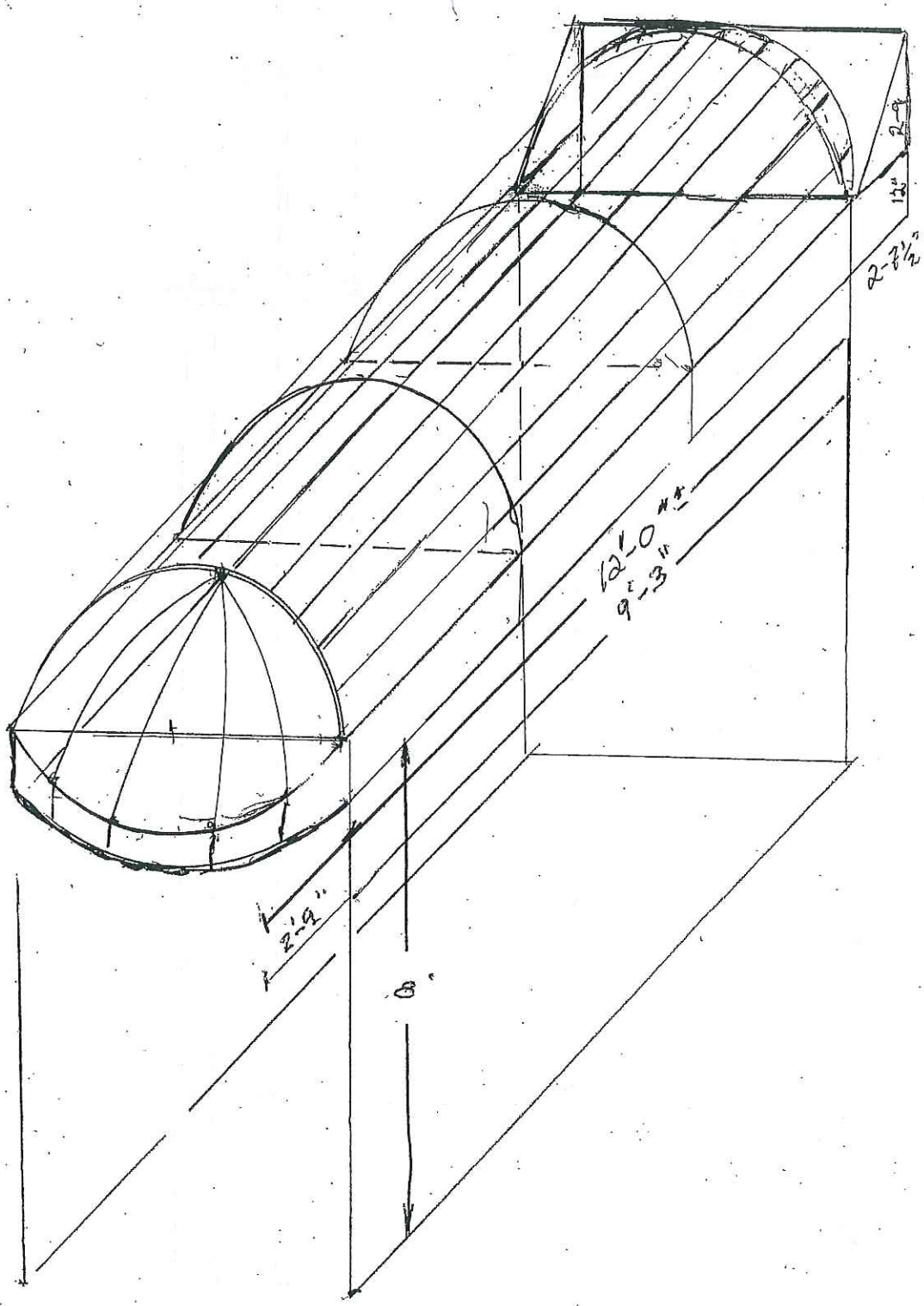

Byrd & Baldwin

Byrd & Baldwin Bros Steakhouse : Isometric View ; Scale : ½" = 1'-0"
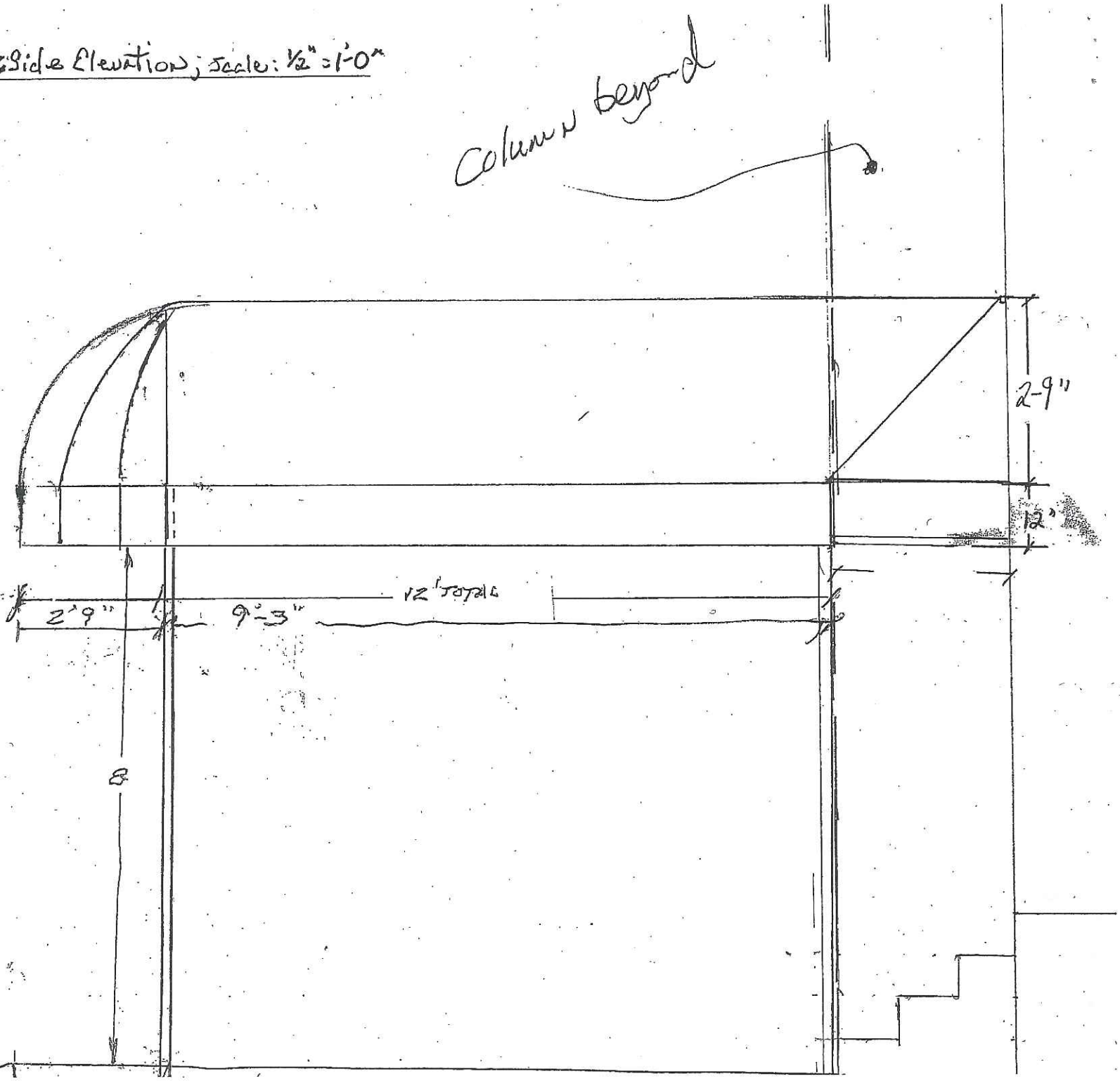
Byrd & Baldwin Bros: Side Elevation; Scale: ½" = 1'-0"