CONTRACT DOCUMENTS
and
TECHNICAL SPECIFICATIONS

for

TRAFFIC SIGNALS
INDEFINITE QUANTITY CONTRACT

August 2015

City of Norfolk

Department of Public Works

7th Floor, City Hall Building
Norfolk, Virginia 23510
(757) 664-4631

TABLE OF CONTENTS
for
TRAFFIC SIGNALS – INDEFINITE QUANTITY CONTRACT
CITY OF NORFOLK

FRONT END DOCUMENTS

Section	**Page(s)**
Table of Contents	i to iii
Invitation for Bids	1
Instructions to Bidders	1.2-1 to 1.2-4
Form of Bid	1.3-1 to 1.3-35
Contract	1.4-1 to 1.4-5
Performance Bond	1 to 2
Payment Bond	1 to 2
AIA A201-2007, "General Conditions of the Contract for Construction" (as modified)	1 to 49

VDOT SPECIAL PROVISIONS

VDOT Civil Rights Division Requirements for Locally-Administered Projects (Federally Funded)	1 to 13
VDOT Federal Provision Form C-104 (rev. 7-13-05) Affidavit **(MUST BE SUBMITTED WITH BID)**	1
VDOT Federal Provision Form C-105 (rev. 7-13-05) Affidavit **(MUST BE SUBMITTED WITH BID)**	1 to 2
VDOT Form C-48 (rev. 2-23-11) Subcontractor/Supplier Solicitation And Utilization Form **(MUST BE SUBMITTED WITH BID)**	1
VDOT Form C-49 (rev. 2-24-14) DBE Good Faith Efforts Documentation **(MUST BE SUBMITTED WITH BID)**	1 to 10
VDOT Form C-111 (rev. 2-15-11) Minimum DBE Requirements Worksheet **(MUST BE SUBMITTED WITH BID)**	1
VDOT form C-112 (rev. 3-1-11) Certification of Binding Agreement **(MUST BE SUBMITTED WITH BID)**	1 to 2
S107HF1-0211 - VDOT Special Provision, Section 107.15 – Use of Disadvantaged Business Enterprises (DBEs)	1 to 20
SF030AF-0708 - VDOT Special Provision, "Notice of Requirement for Affirmative Action to Ensure Equal Employment Opportunity (Executive Order 11246)	1 to 6
SF010DF-0512 - FHWA 1273, Memorandum and CFR Change – Required Contract Provisions in Federal-Aid Construction Contracts	1 to 20
SF001AF-0708, Predetermined Minimum Wage Rates	1 to 2
Federal Wage Decision for Highway Construction Projects in Hampton Roads, Virginia dated January 2, 2015	1 to 5

S102CF2-0813, Use of Domestic Material 1 to 3

VDOT SPECIAL PROVISIONS FOR CONSTRUCTION

c100II2-0112, VDOT Supplemental Specifications (SSs), Special Provisions (SPs) and Special Provisions Copies Notes (SPCNs) 1
c103i01 – Section 103 – Award and Execution of Contracts 1
VDOT Special Provisions 1 to 3
Federal Aid Notice 1
Wage Rate Information (VDOT Form C-59) 1
Non-Discrimination Notice Form (VDOT Form C-60 rev. 6-3-98) 1
Equal Employment Opportunity Notice 1
cu105000a, VDOT Special Provision for Personnel Requirements for Work Zone Traffic Control 1
c105hf1-0309, Section 105.06 – Subcontracting 1
Statement of Compliance (VDOT Form C-56 rev. 4-18-99) 1 to 2
Basic Hourly Rates Paid By Contractor (VDOT Form C-28 rev.2-6-03) 1 to 4
Construction Directive Memorandum (CD-2005-1) 1 to 3
Contractor/Subcontractor Equal Employment Opportunity Information Request (VDOT Form C-64 rev. 10-28-06) 1
Contractor's Progress Schedule for Construction Projects (VDOT Form C-13 rev. 9-28-98c) 1 to 2
Monthly EEO Report (VDOT Form C-57 rev. 0610) 1
Subletting Request (VDOT Form C-31 rev. 5-29-08) 1 to 2
DBE and SWAM Payment Compliance Report (VDOT Form C-63 rev. 7-06-07) 1 to 4

TECHNICAL SPECIFICATIONS

Section	Title	Page(s)
100	General Requirements	100-1 to 100-10
303	Earthwork	303-1 to 303-2
502	Incidental Concrete Items	502-1
504	Sidewalks, Steps & Handrails	504-1
508	Demolition of Pavement	508-1
510	Relocating or Modifying Existing Miscellaneous Items	510-1 to 510-9
512	Maintenance of Traffic	512-1 to 512-8
513	Mobilization	513-1
700	General Traffic Control Devices	700-1 to 700-4
701	Traffic Signs	701-1 to 701-3
703	Norfolk Traffic Controller Assembly	703-1 to 703-34
706	Traffic Signal Heads Assembly	706-1 to 706-5
708	Selective View Traffic Signal Assembly	708-1 to 708-3
709	LED Traffic Signal Lamp	709-1 to 709-2
710	ADA Pedestrian Pushbutton Assembly	710-1 to 710-4

711	Fiber Optic Cable	711-1 to 711-19
712	Mast Arm Assembly Standard	712-1 to 712-7
713	Finishing Structures	713-1 to 713-4
716	Conduits	716-1 to 716-9
720	Steel Strain Poles	720-1 to 720-5
725	Pedestal Pole and Base	725-1 to 725-7
735	Internal 170 Ethernet Module	735-1 to 735-2
750	Signal, Interconnect, Loop Lead-In, Loop Wire and Street Light Cable	750-1 to 750-9
755	Span, Tether, and Lashing Wire & Span Wire Assembly	755-1 to 755-3
760	Loop Sealant	760-1
765	Inductive Loop Detectors	765-1 to 765-9
770	Foundations	770-1 to 770-3
780	Audible ADA Pedestrian Pushbutton Assembly	780-1 to 780-3
804	Fiber Optic Splice Cabinets	804-1 to 804-3
810	Emergency Priority System	810-1 to 810-3
820	Optical Video Detection	820-1 to 820-12
821	Thermal Vehicle Detection	821-1 to 821-12
825	Wireless Magnetic Sensor Vehicle Detection System	825-1 to 825-5
830	Fiber Optic Media Converters	830-1 to 830-2
835	Layer 2 Ethernet Switch	835-1 to 835-3
860	Video Surveillance Camera System (CCTV)	860-1 to 860-8
870	Video Optical Multiplexer (VMUX-TR)	870-1 to 870-2
875	School Zone Flashing Beacon Assembly	875-1 to 875-5
880	Count-Down Pedestrian Signal Head (Ped Head)	880-1 to 880-2
885	Test Pits	885-1
890	Norfolk Battery Backup Assembly	890-1 to 890-11
895	Pre-Formed Loops	895-1 to 895-2
900	Pavement Patch	900-1
901	Record Drawings	901-1

APPENDICES

Appendix A	Public Works Design Standards	A-1 to A-8
Appendix B	Metro Street Name Sign Detail	B-1
Appendix C	CCTV Pole Detail	C-1
Appendix D	School Zone Flashing Beacon Assembly Details	D-1 to D-6
Appendix E	Downtown Standard Pole Details	E-1
Appendix F	Loop Detail	F-1

End of Page

Posted: August 28, 2015

INVITATION FOR BIDS
CITY OF NORFOLK - DEPARTMENT OF PUBLIC WORKS

PROJECT: **TRAFFIC SIGNALS – INDEFINITE QUANTITY CONTRACT**

Owner:	City of Norfolk Department of Public Works 810 Union Street, Room 700 Norfolk, VA 23510 Contact: Irina Hoag Tel: (757) 664-4797 / Fax: (757) 664-7311	AE:	City of Norfolk Department of Public Works 810 Union St., Room 700 Norfolk, VA 23510 Contact: Irina Hoag Tel: (757) 664-4797

****

Sealed bids are to be received in Public Works Department, Attn: Contracts Office, Room 700, 7th floor, City Hall Building, 810 Union Street, Norfolk, VA 23510 until **2:00 p.m., Tuesday, September 29, 2015,** for the above titled Project.

The Work under this project consists of the construction of traffic signals in their entirety or individual components of signals or related communications facilities as they become necessary. **Funding for some projects may include both Federal and State funds therefore the Davis-Bacon Act and VDOT conformance will apply. All prospective contractors, joint-ventures, and subcontractors shall be pre-qualified with the Virginia Department of Transportation prior to award. Information regarding VDOT prequalification can be found at www.virginiadot.org/business/const/prequal.asp .**

Bidding Documents are available from the Department of Public Works in accordance with the Instructions to Bidders upon non-refundable payment of **$5.00 per CD set** in the form of a check made payable to Treasurer, City of Norfolk or may be downloaded from the website www.norfolk.gov/bids.aspx . Cash payments will not be accepted. A copy of the Bidding Documents will be on file and open to inspection at The Builders and Contractors Exchange, Inc., Norfolk, VA (757-858-0680.

A Bid Bond, certified check, or cashier's check made payable to the Treasurer, City of Norfolk, for $5,000 must accompany each bid.

State Contractor registration class and number is required on the outside of the envelope. The City reserves the right to cancel the bid opening or to reject any or all bids in whole or part, when it is in the best interest of the City.

The right to waive informalities and to determine responsiveness of any bid and responsibility of all bidders is reserved to the City. Withdrawal of bids will be in accordance with Section 33.1-42.1 of the Norfolk City Code and Section 11-54 of The Code of Virginia, 1950 (as amended).

David L. Ricks, P.E.
Director

The Virginian Pilot – September 29, 2015
DemandStar – September 29, 2015

INSTRUCTIONS TO BIDDERS

1. AUTHORIZATION TO TRANSACT BUSINESS IN THE COMMONWEALTH

(a) Bidder or offeror organized or authorized to transact business in the Commonwealth pursuant to Title 13.1 or Title 50 to include in its bid or proposal the identification number issued to it by the State Corporation Commission.

(b) Any bidder or offeror that is not required to be authorized to transact business in the Commonwealth as a foreign business entity under Title 13.1 or Title 50 or as otherwise required by law shall include in its bid or proposal a statement describing why the bidder or offeror is not required to be so authorized.

2. SUBMISSION OF BIDS

(a) Make all bids on "Bid Form" and seal in opaque envelope. The name of project, the contractor's name, address, and Virginia Contractor Registration Class and Number shall be placed on the outside of the envelope.

(b) If a contract is for $120,000.00 or more, or if the total value of all such construction, removal, repair, or improvements undertaken by the bidder within any 12 month period is for $750,000.00 or more, the bidder is required under Title 54, Chapter 11, Code of Virginia, 1950 (as amended), to show evidence of being licensed as a Class A Contractor upon award of contract. If a contract is $7,500.00 or more, but less than $120,000.00, or if the total value of all such construction, removal, repair or improvements undertaken by the bidder within any 12 month period is less than $150,000, the bidder is required to show evidence of being licensed as a Class B Contractor upon award of contract. If a contract is $1,000 or more, but less than $7,500, or if the total value of all such construction, removal, repair or improvements undertaken by the bidder within any 12 month period is less than $150,000, the bidder is required to show evidence of being licensed as a Class C Contractor upon award of contract. The bidder shall place on the bid above its signature its Virginia Contractor Registration Class and Number. If a contract is less than $1,000.00, licensure is not required under Title 54, Chapter 11, Code of Virginia, 1950 (as amended).

(c) If bids are submitted by mail, enclose the above noted envelope in a second sealed, opaque envelope and address to: **City of Norfolk, Department of Public Works, Attn: Contracts Office, Room 700, 7th floor, City Hall Building, 810 Union St., Norfolk, VA 23510.** Bids submitted by mail must be received at the above address before the time designated for bid opening.

(d) Fully fill in all blanks in ink or typewritten and state numbers in both writing and figures. Signatures shall be in longhand with name and title printed below. Bidders shall acknowledge all addenda in spaces provided on the bid form. For unit price contracts, in the event of a discrepancy between the Total Base Bid and the total of the extension of unit prices, the total extension of unit prices governs in determining the bid amount. For unit price contracts, in the event of a discrepancy between the extension of unit prices entered on the bid form for a particular line item and the mathematical product of the unit quantity and the unit price for a particular line item (unit quantity x unit price), the mathematical product of the unit quantity and the unit price governs in determining the bid amount.

(e) Interlineations, alterations, and irregularities of any kind may be cause for rejection of the bid. Erasures or any physical changes on the form shall be initialed by the Bidder.

(f) Bidders may withdraw a bid after it has been submitted to the City any time prior to the stipulated time for opening such bids. Withdrawal of bids will be in accordance with Section 33.1-42.1 of the Norfolk City Code and Section 2.2-4330 of the Code of Virginia, 1950 (as amended).

3. EXAMINATION OF SITE

The bidder shall be responsible for having ascertained all pertinent local and existing conditions determinable by inspection and inquiry both on the site and adjacent thereto, including any other work being performed thereon, and shall include in its bid all cost attendant upon problems arising from said conditions existing at the time of submission of its bid.

Reference is made to the Contract Documents for information relating to reports, explorations, underground facilities, and easements. On request, the owner will provide each Bidder access to the site to conduct such examinations, investigations, explorations, tests and studies as each Bidder deems necessary for submission of a Bid. The Bidder must fill all holes, clean up, and restore the site to its former condition upon completion of such explorations, investigations, tests and studies, and hold the Owner harmless from any damage to property or injury to persons resulting from or arising out of such explorations, investigations, tests, and studies.

4. INQUIRIES, INTERPRETATION AND ADDENDA

Should a bidder find discrepancies in, or omissions from, the drawings or documents, or should it be in doubt as to their meaning, it should at once notify the Owner in writing. The Owner will welcome such inquiries and they will be given consideration. Every interpretation made by the Owner will be in the form of a printed addendum which will be on file in the office of the Owner. Addenda will be sent to each bidder, but it will be the bidder's responsibility to know of, examine and become familiar with all addenda issued. All addenda shall become a part of the Contract Documents. The Owner will not be responsible for any oral instruction.

The submission of a Bid will constitute inconvertible representation by the Bidder that the Bidder has complied with every requirement of this Section, that without exception, the Bid is premised upon the agreement by the Bidder to perform the Work required by the Contract Documents, and applying specific means, methods, techniques, sequence or procedures of construction (if any) that may be shown or indicated or expressly required by the Contract Documents, that the Bidder has given Written Notice to the Owner of all conflicts, errors, ambiguities, and discrepancies that the Bidder has discovered in the Contract Documents and the written resolutions thereof by the Owner is acceptable to the Bidder, and that the Contract Documents are generally sufficient to indicate and convey understanding of all terms and conditions of performance and furnishing the Work.

5. BID GUARANTEE

Bids shall be accompanied by a bid guarantee of $5,000.00 and may be a certified check or cashier's check or a Bid Bond, made payable to**: Treasurer, City of Norfolk.** Such bid bond or check shall be submitted with the understanding that it shall guarantee that the bidder will not withdraw its bid during the period of sixty (60) days following the opening of bids; that if its bid is accepted, it will enter into a Contract with the Owner in accordance with a form of agreement acceptable to and approved by the Owner and that the required Performance and Payment Bonds will be given; and that in the event of the withdrawal of said bid within said period, or failure to enter into said contract and given said bonds within ten (10) days after it has received notice of acceptance of its bid, the bidder shall be liable to the Owner for the full amount of the bid guarantee as representing the damage to the Owner on account of the default of the bidder in any particular thereof. The bid bonds and checks will be returned to the bidders after the Owner and the lowest, responsive, responsible bidder have executed a contract. If the required contract has not been executed within sixty (60) days after the date of the opening of the bids, then the bond or check of any bidder will be returned upon its request, provided it has not been notified of the acceptance of its bid prior to the date of such request.

6. PERFORMANCE AND PAYMENT BOND

The General Contractor shall furnish a Performance Bond and a labor and material Payment Bond each in the

amount of **$1,000,000.00** if awarded the contract. Said bonds shall be delivered to the Owner (in duplicate) and shall be approved by the Owner prior to the execution of a construction contract between the Contractor and the Owner. Bonds shall be City of Norfolk standard form and shall be in accordance with Section 33.1-76 of the Norfolk City Code. A bond rider will be required should the aggregate amount of Work Orders exceed the existing bond amount by $100,000 or more. All costs of bonds and/or bond riders shall be paid by the Contractor.

7. TIME OF COMPLETION

(a) All work shall be completed within the allotted calendar days as detailed in each specific Work Order issued commencing from the date of Notice to Proceed of said Work Order.

(b) Work shall not commence until the Contractor has received a fully executed copy of the Contract which authorizes the Work and has also received a Notice to Proceed issued by the authorized City representative. Work commenced prior to receipt of both a fully executed copy of the Contract and a written Notice to Proceed from an authorized City official shall be deemed unauthorized and such work will progress solely at Contractor's risk.

(c) Liquidated Damages: The date of beginning and the time of completion as specified in the Work Order for the work to be done hereunder are essential conditions of the contract. If Contractor shall neglect, fail, or refuse to complete the work within the time herein specified, or any proper extension thereof granted by the Owner, liquidated damages for such breach of contract shall be assessed the Contractor in the amount established by the City for each work order per calendar day that the Contractor shall be in default after the date stipulated in the Contract for completion.

8. NON-DISCRIMINATION CLAUSE

The Contractor agrees to comply, and to require all suppliers and subcontractors paid in whole or in part from funds made available under this contract to comply with Section 122(a)(1) of the State and Local Fiscal Assistance Act of 1972 (P. L. 92-512), as amended, to wit:

"No person in the United States shall, on the grounds of race, color, national origin, or sex, be excluded from participation in, be denied the benefits of, or be subjected to discrimination under any program or activity of a State government or unit of local government, which government or unit receives funds made available under Subtitle A (of Title I of the Act.)

Any prohibition against discrimination on the basis of age under the Age Discrimination Act of 1975 or with respect to an otherwise qualified handicapped individual as provided in Section 504 of the Rehabilitation Act of 1973 shall also apply to any such program or activity.

Any prohibition against discrimination on the basis of religion, or any exemption from such prohibition, as provided in the Civil Rights Act of 1964 or Title VIII of the Act of April 11, 1968, hereafter referred to as the Civil Rights Act of 1968, shall also apply to any such program or activity."

Further, the Contractor agrees to comply with Section 33.l-53 of the Code of the City of Norfolk, Virginia 1979, as amended, regarding prohibited employment discrimination.

9. MINORITY BUSINESS CLAUSE

It is the policy of the City of Norfolk to facilitate the establishment, preservation, and strengthening of small businesses and businesses owned by women and minorities and to encourage their participation in the City's procurement activities. Toward that end, the City encourages these firms to compete and encourages non-minority firms to provide for the participation of small businesses and businesses owned by women and minorities through partnerships, joint ventures, subcontracts, and other contractual opportunities. Bidders (offerors) are asked, as part

of their submission, to describe any planned use of such businesses in fulfilling this contract.

10. NON-COLLUSION AFFIDAVIT

(a) Every bidder, by submitting a bid, shall be deemed to covenant, with regard to said bid, as follows:

(1) that said bid was arrived at independently without collusion, consultation, communication, or agreement for the purpose of restricting competition, as to any matter relating to such prices with any other bidder or with any competitor.

(2) that, unless otherwise required by law, the prices which have been quoted in the bid submitted have not been knowingly disclosed by the bidder and will not knowingly be disclosed by the bidder prior to opening, directly or indirectly, to any other bidder or to any competitor.

(3) that no attempt has been made or will be made by the bidder to induce any other person, partnership or corporation to submit or not to submit a bid for the purpose of restricting competition.

A bid shall not be considered for award nor shall any award be made where the bidder shall have failed to comply with a(1), a(2), or a(3) above.

(b) Every bidder, in addition to making the above covenants (a)(1), (a)(2) and (a)(3) will be required to provide the City of Norfolk, with the bid submitted, the affidavit contained herein.

(c) Every bidder will be required to disclose, with the submitted bid, the following information:

(1) the correct mailing address of the bidder.

(2) if a corporation, the name and current mailing address of the President, the Secretary and the Treasurer of the corporation.

(3) if a partnership, proprietorship or other firm, the name and current mailing address of each partner, proprietor or member of said firm.

(4) whether or not the bidder is associated with; owns, in whole or in part; or is owned, in whole or in part, or is a subsidiary of, any other bidder.

(d) The fact that a bidder (1) has published price lists, rates or tariffs covering items included in the submitted bid; (2) has informed prospective customers of proposed or pending publication of new or revised price lists for such items; or (3) has sold the same items to other customers at the same prices being bid, does not constitute a disclosure within the meaning of Subparagraph 9(a).

(e) Any bid submitted by a corporate bidder shall be deemed to have been authorized by the Board of Directors of the bidder and such authorization shall be deemed to include the signing and submission of the bid and the execution of the affidavit required in (b) above as the acts and deeds of the corporation.

11. SUBSTANCE ABUSE AND DRUG-FREE WORK PLACE

The Contractor agrees to comply with Section 33.1-58 of the Code of the City of Norfolk, Virginia, 1996, as amended, regarding substance Abuse and Drug-Free Work Place Policy.

Bids to be opened:	**2:00 p.m., Tuesday September 29, 2015**
Work to be Completed in:	**As Per Work Order**
Liquidated Damages:	**As Per Section 100**
Performance Bond:	**$1,000,000**
Payment Bond:	**$1,000,000**
Bid Bond:	**$5,000.00**

BID FORM

To: **City of Norfolk**
Department of Public Works
810 Union Street, Room 700
Norfolk, Virginia 23510

A. **UNIT PRICE BID**

In compliance with the Invitation for Bids and Instructions to Bidders, Contract, the General Conditions of the Contract, the contract drawings and specifications titled **TRAFFIC SIGNALS – INDEFINITE QUANTITY CONTRACT** and all addenda issued to date, all of which are part of this bid, the undersigned hereby proposes to furnish all items including materials, labor, and equipment called for, and in strict accordance with, said Contract Documents, an amount equal to the sum of the established bid prices hereto attached and referred to as Attachment A, for:

$_____

_____Dollars ($_____).
(Use words)

B. **ADDENDA**

The undersigned acknowledges receipt of the following addenda:

Addendum No._____Dated:_____

Addendum No._____Dated:_____

Addendum No._____Dated:_____

We agree to enter into a contract with the City of Norfolk, Virginia within ten (10) days of the award of same to us for the price named in our bid.

It is expressly agreed by us that the City of Norfolk, Virginia shall have the right to reject any and all bids and to waive any informalities.

In default of the performance on our part of the conditions of bid, our failure to enter into a contract with the City of Norfolk, Virginia, within the time above set, we herewith furnish a certified check, cashier's

check (or Bid Bond) in the amount of $5,000.00, which shall be forfeited as liquidated damages to the City of Norfolk, Virginia, but otherwise the said check or Bid Bond shall be returned.

We agree to begin work at any time after receipt of the Notice to Proceed from the **Director of Public Works** and complete all of the Work within Three Hundred, Sixty-Five **(365)** calendar days.

C. Norfolk Businesses: It is the policy of the City to support Norfolk businesses and workforce development and it encourages companies with corporate offices in Norfolk and which employ Norfolk residents to compete for City contracts. Bidders are asked, as part of their submission, to advise of their Norfolk location and detail their employment of Norfolk residents.

D. Equal Opportunity Business Development: It is the policy of the City of Norfolk to facilitate the establishment, preservation, and strengthening of small businesses and businesses owned by women and minorities and to encourage their participation in the City's procurement activities. Toward that end, the City encourages these firms to compete and encourages non-minority firms to provide for the participation of small businesses and businesses owned by women and minorities through partnerships, joint ventures, subcontracts, and other contractual opportunities. Bidders (offerors) are asked, as part of their submission, to describe any planned use of such businesses.

1. Is your firm a minority owned business? Yes ___ No ___ If yes, please check the appropriate category: ___ African American (male), ___ African American (female), ___ Caucasian (female), ___ Hispanic (male), ___ Hispanic (female), ___ Asian American (male), ___ Asian American (female), ___ American Indian (male), ___ American Indian (female), ___ Eskimo (male), ___ Eskimo (female), ___ Aleut (male), ___ Aleut (female), ___ Other (male), ___ Other (female).

2. Subcontracting Opportunities for Small, Women Owned, Minority Business Enterprises and Disabled Veterans. All prime contractors are requested to furnish the following information regarding participation of small, women owned, minority business enterprises and disabled veterans:

a. Proposed Name of your Subcontractor(s):

b. Proposed Minority Category of Subcontractor(s) - please check the appropriate category(ies):

___ African American (male)	___ African American (female)
___ Hispanic (male)	___ Hispanic (female)
___ Asian American (male)	___ Asian American (female)
___ American Indian (male)	___ American Indian (female

___ Eskimo (male)	___ Eskimo (female)
___ Aleut (male)	___ Aleut (female)
___ Other (male)	___ Caucasian (female)
	___ Other (female)

c. Proposed Amount of Subcontracts:

d. Proposed Description of commodity (i.e. masonry, hauling, insulation, etc.):

e. Proposed Description of Project:

f. Proposed Total value of awards to all subcontractors:

g. Proposed Total Number of minority subcontracts awarded:

h. If you do not propose the use of any subcontractors, please check here ____.

E. The undersigned has read all sections under "Instructions to Bidders."

F. **CONTRACTOR'S REGISTRATION AND SIGNATURE**

Registered Virginia Contractor Class and No._____

City of Norfolk Business License No. _____

Contractor_____ Signed_____ (SEAL)

Date_____ Title_____

NOTE: If Bidder is a corporation, write state of incorporation under signature and if a partnership, give full names of all partners.

End of Page

T H I S

P A G E

I N T E N T I O N A L L Y

L E F T

B L A N K

AFFIDAVIT

City of Norfolk, Virginia project: **Traffic Signals – Indefinite Quantity Contract**

Bid Date:_____

STATE OF VIRGINIA
(City/County)

This day personally appeared before the undersigned, a Notary Public in and for the City/County and State aforesaid, _____, who having been first duly sworn
(name of owner, partner, president)
according to law, did depose and aver as follows:

(a) That he is_____
(owner, partner, president, etc.)

of_____
(insert name of contractor)

(b) That he is personally familiar with the bid of _____
(insert name of contractor)
submitted in connection with the above captioned City of Norfolk project.

(c) That said bid was formulated and submitted in good faith as the true bid of said bidder.

(d) That said bid in no manner violates the Sherman Antitrust Act (15 U.S.C. '1 *et seq.*), The Virginia Antitrust Act (n59.1-9.1 through n59.1-9.17 Code of Virginia, (1950), as amended) or the Conspiracy to Rig Bids to Government Act (nn59.1-68.8, Code of Virginia (1950), as amended.

And further this deponent saith not.

_____
Affiant

Subscribed and sworn to before me this_____day of_____, 20___.

My commission expires:_____, 20___

_____
Notary Public

MAILING ADDRESS, FAX AND TELEPHONE NUMBER OF BIDDER:

_____

_____

_____

IF CORPORATION, PROVIDE NAME AND MAILING ADDRESS AS REQUIRED BELOW

PRESIDENT	SECRETARY	TREASURER
_____	_____	_____
_____	_____	_____
_____	_____	_____
_____	_____	_____

IF PARTNERSHIP, PROPRIETORSHIP, OR OTHER FIRM, PROVIDE NAME AND MAILING ADDRESS OF EACH PARTNER, PROPRIETOR, OR MEMBER OF FIRM.

_____	_____	_____
_____	_____	_____
_____	_____	_____
_____	_____	_____

End of Page

A. COMPLIANCE WITH STATE LAW

B. AUTHORIZATION TO TRANSACT BUSINESS IN THE COMMONWEALTH

I. **CERTIFICATION**

A. The Bidder/Vendor (Please fill in with your enterprise's complete name)

_____

certifies that it is organized or authorized to transact business in the Commonwealth pursuant to Title 13.1 or Title 50.

The identification number issued to Bidder/Vender by the State Corporation Commission: _____

B. Bidder/Vendor that is not required to be authorized to transact business in the Commonwealth as a foreign business entity under Title 13.1 or Title 50 or as otherwise required by law shall describe why it is not required to be so authorized:

_____

_____

_____

Bidder/Vendor:_____

Signed: _____

Title: _____

Date: _____

II. **INSTRUCTIONS**

a. The Bidder/Vendor shall provide immediate written notice to the Contracting Officer if, at any time prior to contract award, the Vendor learns that its certification was erroneous when submitted or has become erroneous by reason of changed circumstances.

b. A certification that any of the items in paragraph (a) of this provision exists will not necessarily result in withholding of an award under this solicitation. However, the certification will be considered in connection with a determination of the Bidder's/Vendor's responsibility. Failure of the Bidder/Vendor to furnish a certification or provide such additional information as requested by the appropriate City purchasing official may render the Bidder/Vendor non-responsible.

c. Nothing contained in the foregoing shall be construed to require establishment of a system of records in order to render, in good faith, the certification required by paragraph (a) of this provision. The knowledge and information of a Bidder/Vendor is not required to exceed that which is normally possessed by a prudent person in the ordinary course of business dealings.

d. The certification in paragraph (a) of this provision is a material representation of fact upon which reliance was placed when making award. If it is later determined that the Bidder/Vendor knowingly rendered an erroneous certification, in addition to other remedies available to the City, the appropriate City purchasing official may terminate the contract resulting from this solicitation for default.

End of Page

SCHEDULE OF UNIT PRICES
for
TRAFFIC SIGNALS – INDEFINITE QUANTITY CONTRACT
OWNER: CITY of NORFOLK, VIRGINIA

The unit prices have been computed in accordance with Subparagraph 7.3.3.2 of the General Conditions. Bidder acknowledges that estimated quantities are not guaranteed, and are solely for the purpose of comparison of Bids, and final payment for all Unit Price Bid items will be based on actual quantities provided, determined as provided in the Contract Documents. The prices quoted shall include, without exception, all materials, labor, equipment, appliances, clean-up, applicable sales, use and other taxes, building permits or fees, and the Contractor's labor, overhead, profit, mobilization and other mark-ups, and in full accordance with the Specifications. Include allowance for waste where appropriate. The unit prices shall be maintained throughout the contract period. Unit prices shall be used in determining additions or deductions from the TOTAL CONTRACT AWARD amount in the event of changes in the work.

ITEM	DESCRIPTION	UNIT	QTY	UNIT PRICE	EXTENSION
	Performance Items				
1	Emergency Response (3 Hours) (Section 100)	EA	10		
2	Quick Response (3 Days) (Section 100)	EA	20		
3	Normal Response (5 Days) (Section 100)	EA	10		
	Roadway Items				
4	Handicap Ramp (VDOT Std. CG-12A) (Section 502)	EA	20		
5	Handicap Ramp (VDOT Std. CG-12B) (Section 502	EA	20		
6	Handicap Ramp (VDOT Std. CG-12C) (Section 502)	EA	20		
7	Curb & Gutter (Norfolk Std. HS-202) (Section VDOT 502 & Appendix)	LF	300		
8	Curb (Norfolk Std. HS-201) (Section VDOT 502 & Appendix)	LF	300		
9	Curb & Gutter (VDOT Std. CG-6) (Section VDOT 502)	LF	300		
10	Hydraulic Cement Concrete Sidewalk (Norfolk Std. HS-206) (Section VDOT 504 & Appendix)	SF	200		
11	Residential Driveway Apron (Norfolk Std. HS-207) (Appendix)	SF	200		
12	Tree Protection (Norfolk Std. HS-602) (Section 303 & Appendix)	EA	200		
13	Erosion & Sediment Control (Section 303)	LF	150		

Attachment A-1

ITEM	DESCRIPTION	UNIT	QTY	UNIT PRICE	EXTENSION
14	Demolition Saw Cutting (Rigid Pavement) (Section 508)	LF	400		
15	Demolition Saw Cutting (Flexible Pavement) (Section 508)	LF	400		
16	Pavement Patch, Asphalt (Type I, Norfolk Std. HS-301) (Section 900 & Appendix)	SY	200		
17	Pavement Patch, Asphalt over Concrete Pavement (Type II, Norfolk Std. HS-302) (Section 900 & Appendix)	SY	200		
18	Pavement Patch, Concrete (Type III, Norfolk Std. HS-303) (Section 900 & Appendix)	SY	200		
19	Remove and Reinstall Brick Pavers (Section 510)	SF	100		
20	Test Pits (Section 885)	EA	20		
	Maintenance of Traffic Items				
21	Police Officer (Section 512)	HR	40		
22	Flagger Service (Section VDOT 512)	HR	250		
23	Dynamic Message Sign (Section 512)	HR	200		
24	Electronic Arrow (Section VDOT 512)	HR	3,000		
25	Group 2 Channelizing Device (Section 512)	EA	100		
26	Group 1 Channelizing Device (Section 512)	EA	100		
27	Construction Sign (Section VDOT 512)	SF	3,000		
28	Construction Pavement Marking (4-inch, Type D) (Section VDOT 512)	LF	600		
29	Eradication of Existing Pavement Markings (Section VDOT 512)	LF	500		
30	Temporary Signalization (Section 512)	LS	10		
31	Furnish Portable Temporary Signal Trailer (Section 512)	EA	10		
	Removal / Modification Items				
32	Demolition of Pavement (Rigid) (Section VDOT 508)	SY	200		
33	Demolition of Pavement (Flexible) (Section VDOT 508)	SY	200		

Attachment A-2

ITEM	DESCRIPTION	UNIT	QTY	UNIT PRICE	EXTENSION
34	Remove Existing Curb & Gutter (Section VDOT 510)	LF	500		
35	Remove Existing Concrete Sidewalk (Section VDOT 510)	SF	500		
36	Remove Existing Mast Arm Pole (Section 510)	EA	20		
37	Remove Existing Street Lighting Pole (Section 510)	EA	10		
38	Remove Existing Pedestal Pole (Section 510)	EA	10		
39	Remove Existing Strain Pole (Section 510)	EA	30		
40	Remove Existing Mast Arm Pole Foundation (Section 510)	EA	30		
41	Remove Existing Pedestal Pole Foundation (Section 510)	EA	10		
42	Remove Existing Street Lighting Pole Foundation (Section 510)	EA	10		
43	Remove Existing Junction Box (Section 510)	EA	50		
44	Remove Existing Controller Assembly (Section 510)	EA	75		
45	Remove Existing Signal Head Assembly (3-section) (Section 510)	EA	500		
46	Remove Existing Signal Head Assembly (5-section) (Section 510)	EA	500		
47	Remove Existing Signal Head Assembly (pedestrian) (Section 510)	EA	75		
48	Remove Existing Traffic Signal Lamp (Section 510)	EA	200		
49	Remove Existing Mast Arm Assembly (Section 510)	EA	20		
50	Remove Existing Span Wire Assembly (Section 510)	LF	3,000		
51	Remove Existing Overhead Sign Structure (Section 510)	EA	10		
52	Remove Existing Cable (copper, aerial) (Section 510)	LF	3,000		
53	Remove Existing Cable (copper, underground) (Section 510)	LF	3,000		
54	Remove Existing Cable (fiber, aerial) (Section 510)	LF	3,000		
55	Remove Existing Cable (fiber, underground) (Section 510)	LF	3,000		

Attachment A-3

ITEM	DESCRIPTION	UNIT	QTY	UNIT PRICE	EXTENSION
56	Remove Existing Conduit (Section 510)	LF	500		
57	Remove Existing Sign (Section 510)	EA	10		
58	Modify Existing Riser (Section 510)	EA	5		
59	Modify Existing Strain Pole (Section 510)	EA	5		
60	Modify Existing Pole Foundation (Section 510)	EA	5		
61	Modify Existing Cabinet Foundation (Section 510)	EA	10		
62	Modify Existing Junction Box (Section 510)	EA	10		
63	Modify Existing Pole Mounted Cabinet (Section 510)	EA	4		
	Signing & Marking Items				
64	Furnish Sign Post (2-inch) (Section 700)	LF	200		
65	Furnish Sign Post (2 ¼ -inch) (Section 700)	LF	200		
66	Furnish Sign Post (2 3/16-inch) (Section 700)	LF	200		
67	Furnish Sign Post (2 ½-inch) (Section 700)	LF	200		
68	Furnish Sign Post (2-inch, Green or Black) (Section 700)	LF	200		
69	Furnish Sign Post (2 ½-inch, Green or Black) (Section 700)	LF	200		
70	Install Sign Post (2-inch) (Section 700)	LF	200		
71	Install Sign Post (2 ¼-inch) (Section 700)	LF	200		
72	Install Sign Post (2 3/16-inch) (Section 700)	LF	200		
73	Install Sign Post (2 ½-inch) (Section 700)	LF	200		
74	Furnish and Install Sign Post (2-inch) (Section 700)	LF	200		
75	Furnish and Install Sign Post (2 ¼-inch) (Section 700)	LF	200		
76	Furnish and Install Sign Post (2 3/16-inch) (Section 700)	LF	200		
77	Furnish and Install Sign Post (2 ½-inch) (Section 700)	LF	200		
78	Furnish and Install Sign Post (2-inch, Green or Black) (Section 700)	LF	200		
79	Furnish and Install Sign Post (2 ½-inch, Green or Black) (Section 700)	LF	200		

Attachment A-4

ITEM	DESCRIPTION	UNIT	QTY	UNIT PRICE	EXTENSION
80	Furnish Traffic Sign (Section 701)	SF	300		
81	Furnish Traffic Sign (Colored Backing) (Section 701)	SF	300		
82	Install Traffic Sign (Section 701)	SF	300		
83	Furnish and Install Traffic Sign (Section 701)	SF	300		
84	Furnish and Install Traffic Sign (Colored Backing) (Section 701)	SF	300		
85	Furnish and Install Traffic Sign Assembly (Mast Arm Installation) (Section 701)	SF	200		
86	Furnish and Install Traffic Sign Assembly (Span Wire Installation) (Section 701)	SF	200		
87	Furnish Anchor Sleeve (for 2-inch Post) (Section 700)	EA	50		
88	Furnish Anchor Sleeve (for 2 ½-inch Post) (Section 700)	EA	50		
89	Furnish and Install Anchor Sleeve (for 2-inch Post) (Section 700)	EA	50		
90	Furnish and Install Anchor Sleeve (for 2 ½-inch Post) (Section 700)	EA	50		
91	Furnish Anchor Base (for 2-inch Post) (Section 700)	EA	50		
92	Furnish Anchor Base (for 2 ½-inch Post) (Section 700)	EA	50		
93	Furnish and Install Anchor Base (for 2-inch Post) (Section 700)	EA	50		
94	Furnish and Install Anchor Base (for 2 ½-inch post) (Section 700)	EA	50		
95	Furnish Slip Base (for 2 ½-inch Post) (Section 700)	EA	50		
96	Furnish and Install Slip Base (for 2 ½-inch Post) (Section 700)	EA	50		
97	Furnish and Install Concrete Footing (Section 700)	CY	200		
98	Relocate Existing Mast Arm Street Name Sign Panel (Re-installation) (Section 510)	EA	20		
99	Relocate Existing Mast Arm Traffic Sign Panel (Re-installation) (Section 510)	EA	20		
100	Pavement Line Marking (Type A, 4-inch) (Section VDOT 704)	LF	2,000		
101	Pavement Line Marking (Type A, 12-inch) (Section VDOT 704)	LF	2,000		

Attachment A-5

ITEM	DESCRIPTION	UNIT	QTY	UNIT PRICE	EXTENSION
102	Pavement Line Marking (Type A, 24-inch) (Section VDOT 704)	LF	1,000		
103	Pavement Line Marking (Type B, Class IV, 4-inch) (Section VDOT 704)	LF	1,000		
104	Pavement Line Marking (Type B, Class IV, 12-inch (Section VDOT 704)	LF	1,000		
105	Pavement Line Marking (Type B, Class IV, 24-inch) (Section VDOT 704)	LF	600		
106	Pavement Line Marking (Type B, Class VI, 4-inch) (Section VDOT 704)	LF	200		
107	Pavement Line Marking (Type B, Class I, 4-inch) (Section VDOT 704)	LF	5,000		
108	Pavement Line Marking (Type B, Class I, 12-inch) (Section VDOT 704)	LF	2,500		
109	Pavement Line Marking (Type B, Class I, 24-inch) (Section VDOT 704)	LF	800		
110	Pavement Message Marking (Type B, Class I, Single Turn Arrow) (Section VDOT 704)	EA	30		
111	Pavement Message Marking (Type B, Class I, Combination Turn Arrow) (Section VDOT 704)	EA	20		
112	Pavement Message Marking (Type B, Class I, “ONLY”) (Section VDOT 704)	EA	30		
113	Pavement Message Marking (Type B, Class I, “SCHOOL”) (Section VDOT 704)	EA	10		
114	Pavement Message Marking (Type B, Class I, “STOP”) (Section VDOT 704)	EA	20		
115	Pavement Markers (Snow-Plowable, Raised, 1-way) (Section VDOT 704)	EA	100		
116	Pavement Markers (Snow-Plowable, Raised, 2-way) (Section VDOT 704)	EA	100		
	Traffic Items				
117	Furnish Traffic Controller Assembly (Type 2070, 336S Cabinet, Type A Finish) (Section 703)	EA	20		
118	Install Traffic Controller Assembly (Type 2070, 336S Cabinet, Type A Finish) (Section 703)	EA	20		
119	Furnish & Install Traffic Controller Assembly (Type 2070, 336S Cabinet, Type A Finish) (Section 703)	EA	20		

Attachment A-6

ITEM	DESCRIPTION	UNIT	QTY	UNIT PRICE	EXTENSION
120	Furnish Traffic Controller Assembly (Type 2070, 336S Cabinet, Type B or C Finish) (Section 703)	EA	20		
121	Install Traffic Controller Assembly (Type 2070, 336S Cabinet, Type B or C Finish) (Section 703)	EA	20		
122	Furnish & Install Traffic Controller Assembly (Type 2070, 336S Cabinet, Type B or C Finish) (Section 703)	EA	20		
123	Furnish Traffic Controller Assembly (Type 2070, 332 Cabinet, Type A Finish) (Section 703)	EA	20		
124	Install Traffic Controller Assembly (Type 2070, 332 Cabinet, Type A Finish) (Section 703)	EA	20		
125	Furnish & Install Traffic Controller Assembly (Type 2070, 332 Cabinet, Type A Finish) (Section 703)	EA	20		
126	Furnish Traffic Controller Assembly (Type 2070, 332 Cabinet, Type B or C Finish) (Section 703)	EA	20		
127	Install Traffic Controller Assembly (Type 2070, 332 Cabinet, Type B or C Finish) (Section 703)	EA	20		
128	Furnish & Install Traffic Controller Assembly (Type 2070, 332 Cabinet, Type B or C Finish) (Section 703)	EA	20		
129	Furnish Traffic Controller Cabinet (336S, without plug-ins, Type A Finish) (Section 703)	EA	20		
130	Install Traffic Controller Cabinet (336S, without plug-ins, Type A Finish) (Section 703)	EA	20		
131	Furnish & Install Traffic Controller Cabinet (336S, without plug-ins, Type A Finish) (Section 703)	EA	20		
132	Furnish Traffic Controller Cabinet (336S, without plug-ins, Type B or C Finish) (Section 703)	EA	20		
133	Install Traffic Controller Cabinet (336S, without plug-ins, Type B or C Finish)	EA	20		
134	Furnish & Install Traffic Controller Cabinet (336S, without plug-ins, Type B or C Finish) (Section 703)	EA	20		

ITEM	DESCRIPTION	UNIT	QTY	UNIT PRICE	EXTENSION
135	Furnish Traffic Controller Cabinet (332, without plug-ins, Type A Finish) (Section 703)	EA	20		
136	Install Traffic Controller Cabinet (332, without plug-ins, Type A Finish) (Section 703)	EA	20		
137	Furnish & Install Traffic Controller Cabinet (332, without plug-ins, Type A Finish) (Section 703)	EA	20		
138	Furnish Traffic Controller Cabinet (332, without plug-ins, Type B or C Finish (Section 703)	EA	20		
139	Install Traffic Controller Cabinet (332, without plug-ins, Type B or C Finish) (Section 703)	EA	20		
140	Furnish & Install Traffic Controller Cabinet (332, without plug-ins, Type B or C Finish) (Section 703)	EA	20		
141	Furnish and Install traffic signal load switch (Section 703)	EA	20		
142	Conflict Monitor 2010ECL/ip (Section 703)	EA	10		
143	Furnish Cabinet Shell (Model 336S, Type A Finish) (Section 890)	EA	10		
144	Install Cabinet Shell (Model 336S, Type A Finish) (Section 890)	EA	10		
145	Furnish & Install Cabinet Shell (Model 336S, Type A Finish) (Section 890)	EA	10		
146	Furnish Cabinet Shell (Model 336S, Type B or C Finish) (Section 890)	EA	10		
147	Install Cabinet Shell (Model 336S, Type B or C Finish) (Section 890)	EA	10		
148	Furnish & Install Cabinet Shell (Model 336S, Type B or C Finish) (Section 890)	EA	10		
149	Furnish Cabinet Shell (Model 332, Type A Finish) (Section 890)	EA	10		
150	Install Cabinet Shell (Model 332, Type A Finish) (Section 890)	EA	10		
151	Furnish & Install Cabinet Shell (Model 332, Type A Finish) (Section 890)	EA	10		
152	Furnish Cabinet Shell (Model 332, Type B or C Finish) (Section 890)	EA	10		
153	Install Cabinet Shell (Model 332, Type B or C Finish) (Section 890)	EA	10		

Attachment A-8

ITEM	DESCRIPTION	UNIT	QTY	UNIT PRICE	EXTENSION
154	Furnish & Install Cabinet Shell (Model 332, Type B or C Finish) (Section 890)	EA	10		
155	Furnish Battery Backup Assembly (Section 890)	EA	10		
156	Install Battery Backup Assembly (Section 890)	EA	10		
157	Furnish & Install Battery Backup Assembly (Section 890)	EA	10		
158	Install Type 170 336S Adapter Base for Cabinet (Section 703)	EA	20		
159	Furnish & Install Type 170 336S Adapter Base for Cabinet (Section 703)	EA	20		
160	Install Type 170 332 Adapter Base for Cabinet (Section 703)	EA	20		
161	Furnish & Install Type 170 332 Adapter Base for Cabinet (Section 703)	EA	20		
162	Install Traffic Signal Head Assembly (3-Section Signal) (Section 706)	EA	10		
163	Install Traffic Signal Head Assembly (4-Section Signal) (Section 706)	EA	10		
164	Furnish & Install Traffic Signal Head Assembly (4-Section Signal) (Section 706)	EA	10		
165	Furnish & Install Traffic Signal Head Assembly (3-Section Signal) (Section 706)	EA	100		
166	Furnish & Install Traffic Signal Head Assembly (5-Section Signal) (Section 706)	EA	50		
167	Furnish & Install Selective View Traffic Signal Head Assembly (1-Way, 3-Section Signal) (Section 708)	EA	10		
168	Furnish & Install Selective View Traffic Signal Head Assembly (1-Way, 5-Section Signal) (Section 708)	EA	10		
169	Ray Louver (Section 706)	EA	100		
170	Mast Arm Installation (VDOT Std. SM-3, Traffic Signal Head Assembly) (Section 706)	EA	100		
171	Side Mount Installation (VDOT Std. SM-3, Traffic Signal Head Assembly) (Section 706)	EA	30		
172	Side Mount Installation (VDOT Std. SMB-3, Traffic Signal Head Assembly) (Section 706)	EA	30		
173	Relocate Existing Span Wire Signal Head Assembly (Re-installation) (Section 510)	EA	10		

Attachment A-9

ITEM	DESCRIPTION	UNIT	QTY	UNIT PRICE	EXTENSION
174	Relocate Existing Mast Arm Signal Head Assembly (3-Section Signal, Re-installation) (Section 510)	EA	30		
175	Relocate Existing Mast Arm Signal Head Assembly (5-section Signal, Re-installation) (Section 510)	EA	10		
176	Furnish Span Wire Assembly (Section 755)	EA	300		
177	Install Span Wire Assembly (Section 755)	EA	300		
178	Furnish & Install Span Wire Assembly (Section 755)	EA	300		
179	Relocate Existing Mast Arm Signal Head Assembly (Pedestrian Signal, Re-installation) (Section 510)	EA	10		
180	Install Countdown Pedestrian Signal Assembly (VDOT Std SP-9, 1-Way) (Section 880)	EA	50		
181	Furnish & Install Countdown Pedestrian Signal Assembly (VDOT Std SP-9, 1-Way) (Section 880)	EA	50		
182	Install Countdown Pedestrian Signal Assembly (VDOT Std SP-9, 2-Way) (Section 880)	EA	50		
183	Furnish & Install Countdown Pedestrian Signal Assembly (VDOT Std SP-9, 2-Way) (Section 880)	EA	50		
184	Install Countdown Pedestrian Signal Assembly (VDOT Std SP-8, 1-Way) (Section 880)	EA	50		
185	Furnish & Install Countdown Pedestrian Signal Assembly (VDOT Std SP-8, 1-Way) (Section 880)	EA	50		
186	Install Countdown Pedestrian Signal Assembly (VDOT Std SP-8, 2-Way) (Section 880)	EA	50		
187	Furnish & Install Countdown Pedestrian Signal Assembly (VDOT Std SP-8, 2-Way) (Section 880)	EA	50		
188	Furnish LED Traffic Signal Lamp (All) (Section 709)	EA	100		
189	Install LED Traffic Signal Lamp (All) (Section 709)	EA	100		
190	Furnish & Install LED Traffic Signal Lamp (All) (Section 709)	EA	100		

ITEM	DESCRIPTION	UNIT	QTY	UNIT PRICE	EXTENSION
191	Furnish LED Traffic Signal Lamp (8”, Amber) (Section 709)	EA	50		
192	Install LED Traffic Signal Lamp (8”, Amber) (Section 709)	EA	50		
193	Furnish & Install LED Traffic Signal Lamp (8”, Amber) (Section 709)	EA	50		
194	Furnish LED Solar flashing Light (8” Amber) (Section 709)	EA	40		
195	Furnish LED Solar flashing Light (8” Red) Section 709)	EA	40		
196	Furnish & Install Ray Louver (Section 706)	EA	10		
197	Furnish ADA Pedestrian Pushbutton Assembly (Section 710)	EA	20		
198	Install ADA Pedestrian Pushbutton Assembly (Section 710)	EA	20		
199	Furnish & Install ADA Pedestrian Pushbutton Assembly (Section 710)	EA	20		
200	Furnish Audible ADA Pedestrian Pushbutton Assembly (Section 780)	EA	8		
201	Install Audible ADA Pedestrian Pushbutton Assembly (Section 780)	EA	8		
202	Furnish & Install Audible ADA Pedestrian Assembly (Section 780)	EA	8		
203	Furnish and Install Latching PED Button control unit Rack mount (Section 710)	EA	10		
204	Relocate Existing Mast Arm Pole Pedestrian Pushbutton and Sign (Re-installation) (Section 510)	EA	10		
205	Furnish & Install Emergency Priority System Optical Detector (Single Channel – One Direction) (Section 810)	EA	20		
206	Furnish & Install Emergency Priority System Optical Detector (Single Channel – Two Direction) (Section 810)	EA	20		
207	Furnish & Install Emergency Priority System Optical Detector (Dual Channel – Two Direction) (Section 810)	EA	20		
208	Furnish & Install Emergency Priority System Phase Selector (2-channel) (Section 810	EA	20		
209	Furnish & Install Emergency Priority System Phase Selector (4-channel) (Section 810)	EA	20		

Attachment A-11

ITEM	DESCRIPTION	UNIT	QTY	UNIT PRICE	EXTENSION
210	Furnish & Install Emergency Priority System Model 760 Card Rack (Section 810)	EA	20		
211	Furnish & Install Emergency Priority System Model 758 Auxiliary Interface Panel (Section 810)	EA	20		
212	Furnish & Install Emergency Priority System Conductor Cable (Section 810)	LF	2,000		
213	Install Video Detection Optical Detector (Camera) (Section 820)	EA	10		
214	Furnish & Install Video Detection Optical Detector (Camera) (Section 820)	EA	10		
215	Install Video Detection Video Processor Board (Section 820)	EA	10		
216	Furnish & Install Video Detection Video Processor Board (Section 820)	EA	10		
217	Furnish & Install Video Detection Communication Module (Section 820)	EA	10		
218	Furnish & Install Video Detection Conductor Cable (Section 820)	LF	1,000		
219	Furnish & Install Thermal Detection Camera (Section 821)	EA	19		
220	Furnish & Install Vehicle Detection Equipment (Section 821)	EA	5		
221	Furnish & Install Thermal Detection Monitor (Section 821)	EA	5		
222	Furnish & Install Thermal Detection Cable (Section 821)	LF	5,290		
223	Install Video Surveillance System (CCTV) (Section 860)	EA	10		
224	Furnish & Install Video Surveillance System (CCTV) (Section 860)	EA	10		
225	Furnish & Install Video Surveillance System Conductor Cable Assembly (100 LF) (Section 860)	EA	10		
226	Furnish & Install Video Surveillance System Conductor Cable Assembly (300 LF) (Section 860)	EA	10		
227	Furnish & Install Video Surveillance System Conductor Cable Assembly (500 LF) (Section 860)	EA	10		
228	Wireless Magnetic Sensor Vehicle Detector System (Section 825)	EA	2		
229	Furnish Layer 2 Ethernet Switch (CISCO IE-3000-8TC) (Section 835)	EA	10		

Attachment A-12

ITEM	DESCRIPTION	UNIT	QTY	UNIT PRICE	EXTENSION
230	Install Layer 2 Ethernet Switch (CISCO IE-3000-8TC) (Section 835)	EA	10		
231	Furnish and Install Layer 2 Ethernet Switch (CISCO IE-3000-8TC) (Section 835)	EA	10		
232	Furnish Fiber Optic Media Converter (Section 830)	EA	10		
233	Install Fiber Optic Media Converter (Section 830)	EA	10		
234	Furnish and Install Fiber Optic Media Converter (Section 830)	EA	10		
235	Furnish Internal 170 Ethernet Module (Section 735)	EA	10		
236	Install Internal 170 Ethernet Module (Section 735)	EA	10		
237	Furnish and Install Internal 170 Ethernet Module (Section 735)	EA	10		
238	Furnish & Install Video Optical Multiplexer Combination Pair (Section 870)	EA	10		
239	Furnish ViLink Fiber Optic Data Modem / Transceiver (Section 703)	EA	10		
240	Install ViLink Fiber Optic Data Modem / Transceiver (Section 703)	EA	10		
241	Furnish and Install ViLink Fiber Optic Data Modem / Transceiver (Section 703)	EA	10		
242	Furnish & Install Pull Wire (Section 716)	LF	2,000		
243	Furnish & Install Tracer Wire (#8 Bare Copper) (Section 716)	LF	2,000		
244	Furnish & Install Signal Cable (2-Conductor, #14 AWG) (Section 750)	LF	2,000		
245	Furnish & Install Signal Cable (3-Conductor, #14 AWG) (Section 750	LF	2,000		
246	Furnish & Install Signal Cable (5-Conductor, #14 AWG) (Section 750)	LF	2,000		
247	Furnish & Install Signal Cable (7-Conductor, #14 AWG) (Section 750)	LF	1,200		
248	Furnish & Install Signal Cable (9-Conductor, #14 AWG) (Section 750)	LF	1,200		
249	Furnish & Install Signal Cable (10-Conductor, #14 AWG) (Section 750)	LF	1,200		
250	Furnish & Install Signal Cable (16-Conductor, #14 AWG) (Section 750)	LF	400		
251	Install Signal Cable (3-conductor, #10 AWG) (Section 750)	LF	1,200		

Attachment A-13

ITEM	DESCRIPTION	UNIT	QTY	UNIT PRICE	EXTENSION
252	Install Signal Cable (2-Conductor, #14 AWG) (Section 750)	LF	2,000		
253	Install Signal Cable (3-Conductor, #14 AWG) (Section 750)	LF	2,000		
254	Install Signal Cable (5-Conductor, #14 AWG) (Section 750)	LF	2,000		
255	Install Signal Cable (7-Conductor, #14 AWG) (Section 750)	LF	1,200		
256	Install Signal Cable (9-Conductor, #14 AWG) (Section 750)	LF	1,200		
257	Install Signal Cable (10-Conductor, #14 AWG) (Section 750)	LF	1,200		
258	Install Signal Cable (16-Conductor, #14 AWG) (Section 750)	LF	1,200		
259	Install Service Cable Assembly (VDOT Std SE-3) (Section 750)	EA	4		
260	Furnish & Install Service Cable Assembly (VDOT Std SE-3) (Section 750)	EA	4		
261	Install Service Cable Assembly (VDOT Std SE-4) (Section 750)	EA	4		
262	Furnish & Install Service Cable Assembly (VDOT Std SE-4) (Section 750)	EA	4		
263	Install Service Cable Assembly (VDOT Std SE-5) (Section 750)	EA	4		
264	Furnish & Install Service Cable Assembly (VDOT Std SE-5) (Section 750)	EA	4		
265	Install Lead-in Cable (for Loops IMSA 50-2) (Section 750)	LF	3,000		
266	Furnish & Install Lead-in Cable (for Loops IMSA 50-2) (Section 750)	LF	3,000		
267	Furnish Loop Wire (Section 750)	LF	5,000		
268	Install Loop Wire (Section 750)	LF	5,000		
269	Furnish & Install Loop Wire (Section 750)	LF	5,000		
270	Furnish Tether Wire (Section 755)	LF	5,000		
271	Install Tether Wire (Section 755)	LF	5,000		
272	Furnish & Install Tether Wire (Section 755)	LF	5,000		
273	Install Lashing Wire (Section 755)	LF	5,000		
274	Furnish & Install Lashing Wire (Section 755)	LF	5,000		
275	Furnish Span Wire (Section 755)	LF	5,000		
276	Install Span Wire (Section 755)	LF	5,000		

Attachment A-14

ITEM	DESCRIPTION	UNIT	QTY	UNIT PRICE	EXTENSION
277	Furnish & Install Span Wire (Section 755)	LF	5,000		
278	Furnish & Install Messenger Wire (Section 755)	LF	20,000		
279	Furnish & Install Inductive Loop (TD-1A, 6’x20’, Asphalt) (Section 750)	EA	20		
280	Furnish & Install Inductive Loop (TD-1A, 6’x30’, Asphalt) (Section 750)	EA	30		
281	Furnish & Install Inductive Loop (TD-1A, 6’x40’, Asphalt) (Section 750)	EA	60		
282	Furnish & Install Inductive Loop (TD-1A, 6’x50’, Asphalt) (Section 750)	EA	20		
283	Install Inductive Loop (TD-1B, 6’x6’, Asphalt) (Section 750)	EA	40		
284	Furnish & Install Inductive Loop (TD-1B, 6’x6’, Asphalt) (Section 750)	EA	40		
285	Furnish & Install Inductive Loop (TD-1C, 6’x30’, Asphalt) (Section 750)	EA	10		
286	Install Inductive Loop (TD-1C, 6’x40’, Asphalt) (Section 750)	EA	50		
287	Furnish & Install Inductive Loop (TD-1C, 6’x40’, Asphalt) (Section 750)	EA	50		
288	Furnish & Install Inductive Loop (TD-1C, 6’x50’, Asphalt) (Section 750)	EA	10		
289	Furnish & Install Inductive Loop (TD-1A, 6’x20’, Concrete) (Section 750)	EA	10		
290	Furnish & Install Inductive Loop (TD-1A, 6’x30’, Concrete) (Section 750)	EA	10		
291	Furnish & Install Inductive Loop (TD-1A, 6’x40’, Concrete) (Section 750)	EA	30		
292	Furnish & Install Inductive Loop (TD-1A, 6’x50’, Concrete) (Section 750)	EA	10		
293	Install Inductive Loop (TD-1B, 6’x6’, Concrete) (Section 750)	EA	20		
294	Furnish & Install Inductive Loop (TD-1B, 6’x6’, Concrete) (Section 750)	EA	20		
295	Furnish & Install Inductive Loop (TD-1C, 6’x30’, Concrete) (Section 750)	EA	10		
296	Install Inductive Loop (TD-1C, 6’x40’, Concrete) (Section 750)	EA	20		
297	Furnish & Install Inductive Loop (TD-1C, 6’x40’, Concrete) (Section 750)	EA	20		
298	Furnish & Install Inductive Loop (TD-1C, 6’x50’, Concrete) (Section 750)	EA	10		

Attachment A-15

ITEM	DESCRIPTION	UNIT	QTY	UNIT PRICE	EXTENSION
299	Install Pre-Formed Loop (6’x40’) (Section 895)	EA	10		
300	Furnish & Install Pre-Formed Loop (6’x40’) (Section 895)	EA	10		
301	Install Pre-Formed Loop (6’x6’) (Section 895)	EA	10		
302	Furnish & Install Pre-Formed Loop (6’x6’) (Section 895)	EA	10		
303	Furnish Communications Cable (Single Mode Fiber Optic (SMFO), 6 Count (Section 711)	LF	5,000		
304	Furnish Communications Cable (Single Mode Fiber Optic (SMFO), 12 Count (Section 711)	LF	20,000		
305	Furnish Communications Cable (Single Mode Fiber Optic (SMFO), 24 Count (Section 711)	LF	20,000		
306	Furnish Communications Cable (Single Mode Fiber Optic (SMFO), 48 Count (Section 711)	LF	20,000		
307	Furnish Communications Cable (Single Mode Fiber Optic (SMFO), 96 Count (Section 711)	LF	5,000		
308	Furnish & Install Communications Cable (12 Pair REA Spec. PE-39 BJFA Copper) (Section 750)	LF	5,000		
309	Furnish & Install Communications Cable (24 Pair REA Spec. PE-39 BJFA Copper) (Section750)	LF	5,000		
310	Furnish & Install Communications Cable (12 Pair REA Spec. PE-38 ALP8 Copper) (Section 750)	LF	5,000		
311	Furnish & Install Communications Cable (Single Mode Fiber Optic (SMFO), 6 Count (Section 711)	LF	5,000		
312	Furnish & Install Communications Cable (Single Mode Fiber Optic (SMFO), 12 Count (Section 711)	LF	20,000		
313	Furnish & Install Communications Cable (Single Mode Fiber Optic (SMFO), 24 Count (Section 711)	LF	20,000		
314	Furnish & Install Communications Cable (Single Mode Fiber Optic (SMFO), 48 Count (Section 711)	LF	20,000		

ITEM	DESCRIPTION	UNIT	QTY	UNIT PRICE	EXTENSION
315	Furnish & Install Communications Cable (Single Mode Fiber Optic (SMFO), 96 Count (Section 711)	LF	5,000		
316	Furnish & Install Fiber Optic Communications Cable Riser (Section 711)	EA	20		
317	Furnish & Install Drop Cable 12 and 14 count (Section 711)	LF	400		
318	Fusion Fiber Optic Cable Splice (Section 711)	EA	1,000		
319	Furnish & Install Full Fiber Optic Termination Unit (Section 711)	EA	10		
320	Furnish & Install Fiber Optic Interconnect Enclosure (Section 711)	EA	100		
321	Splice Enclosure (Indoor) (Section 711)	EA	100		
322	Splice Enclosure (Outdoor) (Section 711)	EA	100		
323	Prepare Fiber Audit (Section 711)	HR	200		
324	Install Communications Cable (Single Mode Fiber Optic (SMFO) (Section 711)	LF	5,000		
325	Provide OTDR Traces (Section 711)	EA	200		
326	Optical Light Meter Testing (Section 711)	EA	300		
327	Fiber Splice Cabinet, Base Mounted (Section 804)	EA	10		
328	Fiber Splice Cabinet, Rack Mounted (Section 804)	EA	10		
329	Fiber Optic Splice Enclosure (Aerial) (Section 804)	EA	10		
330	Fiber Optic Splice Enclosure (Above Ground) (Section 804)	EA	10		
331	Fiber Optic Cable (Unwrap Lashing) (Section 711)	LF	5,000		
332	Fiber Optic Cable (Rewrap Lashing) (Section 711)	LF	5,000		
333	Relocate Existing Fiber Optic Cable (Section 510)	LF	5,000		
334	Fiber Splice Tray (Section 804)	EA	50		
335	Wood Pole (Varies – 30’ to 40’ Length) (Section VDOT 700)	EA	1		
336	Wood Pole (Varies – 41’ to 60’ Length) (Section VDOT 700)	EA	1		
337	Furnish Traffic Signal Strain Pole (VDOT Std MP-2, 20’ – 40’ Height) (Section 720)	EA	10		

Attachment A-17

ITEM	DESCRIPTION	UNIT	QTY	UNIT PRICE	EXTENSION
338	Install Traffic Signal Strain Pole (VDOT Std MP-2, 20’ – 40’ Height) (Section 720)	EA	10		
339	Furnish & Install Traffic Signal Strain Pole (VDOT Std MP-2, Box Span, Steel, Type A, up to 50’ span) (Section 720)	EA	10		
340	Furnish & Install Traffic Signal Strain Pole (VDOT Std MP-2, Box Span, Steel, Type A, 51’ to 100’ span) (Section 720)	EA	10		
341	Furnish & Install Traffic Signal Strain Pole (VDOT Std MP-2, Box Span, Steel, Type A, 101’ to 150’ span) (Section 720)	EA	10		
342	Furnish & Install Traffic Signal Strain Pole (VDOT Std MP-2, Box Span, Steel, Type A, 151’ to 200’ span) (Section 720)	EA	10		
343	Furnish & Install Traffic Signal Strain Pole (VDOT Std MP-2, Box Span, Steel, Type B or C, up to 50’ span) (Section 720)	EA	10		
344	Furnish & Install Traffic Signal Strain Pole (VDOT Std MP-2, Box Span, Steel, Type B or C, 51’ to 100’ span) (Section 720)	EA	10		
345	Furnish & Install Traffic Signal Strain Pole (VDOT Std MP-2, Box Span, Steel, Type B or C, 101’ to 150’ span) (Section 720)	EA	10		
346	Furnish & Install Traffic Signal Strain Pole (VDOT Std MP-2, Box Span, Steel, Type B or C, 151’ to 200’ span) (Section 720)	EA	10		
347	Furnish & Install Traffic Signal Strain Pole (VDOT Std MP-2, Diagonal Span, Steel, Type A, up to 50’ span) (Section 720)	EA	10		
348	Furnish & Install Traffic Signal Strain Pole (VDOT Std MP-2, Diagonal Span, Steel, Type A, 51’ to 100’ span) (Section 720)	EA	10		
349	Furnish & Install Traffic Signal Strain Pole (VDOT Std MP-2, Diagonal Span, Steel, Type A, 101’ to 150’ span) (Section 720)	EA	10		
350	Furnish & Install Traffic Signal Strain Pole (VDOT Std MP-2, Diagonal Span, Steel, Type A, 151’ to 200’ span) (Section 720)	EA	10		
351	Furnish & Install Traffic Signal Strain Pole (VDOT Std MP-2, Diagonal Span, Steel, Type B or C, up to 50’ span) (Section 720)	EA	10		
352	Furnish & Install Traffic Signal Strain Pole (VDOT Std MP-2, Diagonal Span, Steel, Type B or C, 51’ to 100’ span) (Section 720)	EA	10		

Attachment A-18

ITEM	DESCRIPTION	UNIT	QTY	UNIT PRICE	EXTENSION
353	Furnish & Install Traffic Signal Strain Pole (VDOT Std MP-2, Diagonal Span, Steel, Type B or C, 101’ to 150’ span) (Section 720)	EA	10		
354	Furnish & Install Traffic Signal Strain Pole (VDOT Std MP-2, Diagonal Span, Steel, Type B or C, 151’ to 200’ span) (Section 720)	EA	10		
355	Furnish & Install CCTV Pole (Type A) (Section 712)	EA	5		
356	Furnish & Install CCTV Pole (Type B or C) (Section 712)	EA	5		
357	Furnish & Install Pedestal Pole VDOT Std. PA-3, Steel, Type A (Section 725)	EA	5		
358	Furnish & Install Pedestal Pole VDOT Std. PA-3, Steel, Type B or C (Section 725)	EA	5		
359	Furnish Pedestal Pole (VDOT Std PF-2, 10’ – 12’ Height, Steel, Type A (Section 725)	EA	10		
360	Furnish Pedestal Pole (VDOT Std PF-2, 10’ – 12’ Height, Steel, Type B or C (Section 725)	EA	10		
361	Furnish Pedestal Pole (VDOT Std PF-2, 10’ Height, Aluminum, Type A (Section 725)	EA	10		
362	Furnish Pedestal Pole (VDOT Std PF-2, 10’ Height, Aluminum, Type B or C (Section 725)	EA	10		
363	Furnish Pedestal Pole (VDOT Std PF-2, 8’ Height, Steel, Type A (Section 725)	EA	10		
364	Furnish Pedestal Pole (VDOT Std PF-2, 8’ Height, Steel, Type B or C (Section 725)	EA	10		
365	Install Pedestal Pole (VDOT Std PF-2, 10’ – 12’ Height) (Section 725)	EA	10		
366	Install Pedestal Pole (VDOT Std PF-2, 8’ Height (Section 725)	EA	10		
367	Furnish & Install Pedestal Pole (VDOT Std PF-2, 10’ Height, Aluminum, Type A)	EA	10		
368	Furnish & Install Pedestal Pole (VDOT Std PF-2, 10’ Height, Aluminum, Type B or C (Section 725)	EA	10		
369	Furnish & Install Pedestal Pole (VDOT Std PF-2, 10’ – 12’ Height, Steel, Type A (Section 725)	EA	10		

Attachment A-19

ITEM	DESCRIPTION	UNIT	QTY	UNIT PRICE	EXTENSION
370	Furnish & Install Pedestal Pole (VDOT Std PF-2, 10’ – 12’ Height, Steel, Type B (Section 725)	EA	10		
371	Furnish & Install Pedestal Pole (VDOT Std PF-2, 8’ Height, Steel, Type A) (Section 725)	EA	10		
372	Furnish & Install Pedestal Pole (VDOT Std PF-2, 8’ Height, Steel, Type B or C (Section 725)	EA	10		
373	Furnish & Install Pedestal Pole (VDOT Std PF-2, 15’ Height, Aluminum, Type A (Section 725)	EA	10		
374	Furnish & Install Pedestal Pole (Access Point Pole, MOD VDOT Std. PF-2, 18’ Height, Aluminum, Type A (Section 725)	EA	4		
375	Furnish & Install Pedestal Pole (Access Point Pole, MOD VDOT Std. PF-2, 18’ Height, Aluminum, Type B or C (Section 725)	EA	4		
376	Furnish & Install Pedestal Pole Base (VDOT Std PF-2, 8’, Type A (Section 725)	EA	10		
377	Furnish & Install Pedestal Pole Base (VDOT Std PF-2, 8’, Type B or C (Section 725)	EA	10		
378	Furnish & Install Pedestal Pole Base (VDOT Std PF-2, 10’ – 12’, Type A (Section 725)	EA	10		
379	Furnish & Install Pedestal Pole Base (VDOT Std PF-2, 10’ – 12’, Type B or C (Section 725)	EA	10		
380	Furnish & Install Pedestal Pole Base (VDOT Std PF-2, 15’, Type A (Section 725)	EA	10		
381	Furnish & Install Pedestal Pole Base (VDOT Std PF-2, 15’, Type B or C (Section 725)	EA	10		
382	Furnish & Install Pedestal Pole Base (Aluminum, Octagon) (Section 725)	EA	10		
383	Furnish & Install Mast Arm Pole Base (Decorative – Downtown Standard) (Section 712)	EA	10		
384	Install Street Light Assembly (Downtown Std) (Section 712)	EA	10		
385	Install Mast Arm Assembly (VDOT Std MP-1, All lengths and heights) (Section 712)	EA	10		

Attachment A-20

ITEM	DESCRIPTION	UNIT	QTY	UNIT PRICE	EXTENSION
386	Furnish Mast Arm Assembly (VDOT Std MP-1, Type A, 20’ pole, up to 20’ arm length) (Section 712)	EA	4		
387	Furnish & Install Mast Arm Assembly (VDOT Std MP-1, Type A, 20’ pole, up to 20’ arm length) (Section 712)	EA	4		
388	Furnish Mast Arm Assembly (VDOT Std MP-1, Type A, 20’ pole, 21’ to 30’ arm length) (Section 712)	EA	4		
389	Furnish & Install Mast Arm Assembly (VDOT Std MP-1, Type A, 20’ pole, 21’ to 30’ arm length) (Section 712)	EA	4		
390	Furnish Mast Arm Assembly (VDOT Std MP-1, Type A, 20’ pole, 31’ to 40’ arm length) (Section 712)	EA	4		
391	Furnish & Install Mast Arm Assembly (VDOT Std MP-1, Type A, 20’ pole, 31’ to 40’ arm length) (Section 712)	EA	4		
392	Furnish Mast Arm Assembly (VDOT Std MP-1, Type A, 20’ pole, 41’ to 50’ arm length) (Section 712)	EA	4		
393	Furnish & Install Mast Arm Assembly (VDOT Std MP-1, Type A, 20’ pole, 41’ to 50’ arm length) (Section 712)	EA	4		
394	Furnish Mast Arm Assembly (VDOT Std MP-1, Type A, 20’ pole, 51’ to 60’ arm length) (Section 712)	EA	5		
395	Furnish & Install Mast Arm Assembly (VDOT Std MP-1, Type A, 20’ pole, 51’ to 60’ arm length) (Section 712)	EA	5		
396	Furnish Mast Arm Assembly (VDOT Std. MP-1, Type B or C, 20’ pole, up to 20’ arm length) (Section 712)	EA	4		
397	Furnish & Install Mast Arm Assembly (VDOT Std. MP-1, Type B or C, 20’ pole, up to 20’ arm length) (Section 712)	EA	4		
398	Furnish Mast Arm Assembly (VDOT Std. MP-1, Type B or C, 20’ pole, 21’ to 30’ arm length) (Section 712)	EA	4		
399	Furnish & Install Mast Arm Assembly (VDOT Std. MP-1, Type B or C, 20’ pole, 21’ to 30’ arm length) (Section 712)	EA	4		
400	Furnish Mast Arm Assembly (VDOT Std. MP-1, Type B or C, 20’ pole, 31’ to 40’ arm length) (Section 712)	EA	4		

Attachment A-21

ITEM	DESCRIPTION	UNIT	QTY	UNIT PRICE	EXTENSION
401	Furnish & Install Mast Arm Assembly (VDOT Std. MP-1, Type B or C, 20’ pole, 31’ to 40’ arm length) (Section 712)	EA	4		
402	Furnish Mast Arm Assembly (VDOT Std. MP-1, Type B or C, 20’ pole, 41’ to 50’ arm length) (Section 712)	EA	4		
403	Furnish & Install Mast Arm Assembly (VDOT Std. MP-1, Type B or C, 20’ pole, 41’ to 50’ arm length) (Section 712)	EA	4		
404	Furnish Mast Arm Assembly (VDOT Std. MP-1, Type B or C, 20’ pole, 51’ to 60’ arm length) (Section 712)	EA	5		
405	Furnish & Install Mast Arm Assembly (VDOT Std. MP-1, Type B or C, 20’ pole, 51’ to 60’ arm length) (Section 712)	EA	5		
406	Furnish Mast Arm Assembly (VDOT Std MP-1, Type A, 30’ pole, up to 20’ arm length, 12’ Luminaire Arm) (Section 712)	EA	4		
407	Furnish & Install Mast Arm Assembly (VDOT Std MP-1, Type A, 30’ pole, up to 20’ arm length, 12’ Luminaire arm) (Section 712)	EA	4		
408	Furnish Mast Arm Assembly (VDOT Std MP-1, Type A, 30’ pole, 21’ to 30’ arm length, 12’ Luminaire arm) (Section 712)	EA	4		
409	Furnish & Install Mast Arm Assembly (VDOT Std MP-1, Type A, 30’ pole, 21’ to 30’ arm length, 12’ Luminaire arm) (Section 712)	EA	4		
410	Furnish Mast Arm Assembly (VDOT Std MP-1, Type A, 30’ pole, 31’ to 40’ arm length, 12’ Luminaire arm) (Section 712)	EA	4		
411	Furnish & Install Mast Arm Assembly (VDOT Std MP-1, Type A, 30’ pole, 31’ to 40’ arm length, 12’ Luminaire arm) (Section 712)	EA	4		
412	Furnish Mast Arm Assembly (VDOT Std MP-1, Type A, 30’ pole, 41’ to 50’ arm length, 12’ Luminaire arm) (Section 712)	EA	4		
413	Furnish & Install Mast Arm Assembly (VDOT Std MP-1, Type A, 30’ pole, 41’ to 50’ arm length, 12’ Luminaire arm) (Section 712)	EA	4		

Attachment A-22

ITEM	DESCRIPTION	UNIT	QTY	UNIT PRICE	EXTENSION
414	Furnish Mast Arm Assembly (VDOT Std MP-1, Type A, 30’ pole, 51’ to 60’ arm length, 12’ Luminaire arm) (Section 712)	EA	5		
415	Furnish & Install Mast Arm Assembly (VDOT Std MP-1, Type A, 30’ pole, 51’ to 60’ arm length, 12’ Luminaire arm) (Section 712)	EA	5		
416	Furnish Mast Arm Assembly (VDOT Std. MP-1, Type B or C, 30’ pole up to 20’ arm length. 12’ Luminaire arm) (Section 712)	EA	4		
417	Furnish & Install Mast Arm Assembly (VDOT Std. MP-1, Type B or C, 30’ pole up to 20’ arm length, 12’ Luminaire arm) (Section 712)	EA	4		
418	Furnish Mast Arm Assembly (VDOT Std. MP-1, Type B or C, 30’ pole, 21’ to 30’ arm length, 12’ Luminaire arm) (Section 712)	EA	4		
419	Furnish & Install Mast Arm Assembly (VDOT Std. MP-1, Type B or C, 30’ pole, 21’ to 30’ arm length, 12’ Luminaire arm) (Section 712)	EA	4		
420	Furnish Mast Arm Assembly (VDOT Std. MP-1, Type B or C, 30’ pole, 31’ to 40’ arm length, 12’ Luminaire arm) (Section 712)	EA	4		
421	Furnish & Install Mast Arm Assembly (VDOT Std. MP-1, Type B or C, 30’ pole, 31’ to 40’ arm length, 12’ Luminaire arm) (Section 712)	EA	4		
422	Furnish Mast Arm Assembly (VDOT Std. MP-1, Type B or C, 30’ pole, 41’ to 50’ arm length, 12’ Luminaire arm) (Section 712)	EA	4		
423	Furnish & Install Mast Arm Assembly (VDOT Std. MP-1, Type B or C, 30’ pole, 41’ to 50’ arm length, 12’ Luminaire arm) (Section 712)	EA	4		
424	Furnish Mast Arm Assembly (VDOT Std. MP-1, Type B or C, 30’ pole, 51’ to 60’ arm length, 12’ Luminaire arm) (Section 712)	EA	5		
425	Furnish & Install Mast Arm Assembly (VDOT Std. MP-1, Type B or C, 30’ pole, 51’ to 60’ arm length, 12’ Luminaire arm) (Section 712	EA	5		
426	Prepare & Paint Existing Structure (30’ Metal Street Light Pole w/base) (Section 713)	EA	20		

Attachment A-23

ITEM	DESCRIPTION	UNIT	QTY	UNIT PRICE	EXTENSION
427	Prepare & Paint Existing Structure (13' Fluted Aluminum Acorn Street Light Pole & Base, Type B or C) (Section 713)	EA	20		
428	Prepare & Paint Existing Structure (13' Fluted Fiberglass Acorn Street Light Pole & Base, Type B or C) (Section 713)	EA	20		
429	Prepare & Paint Existing Structure (Traffic Signal Mast Arm Assembly, Type B or C) (Section 713)	EA	20		
430	Prepare & Paint Existing Structure (Overhead Sign Structure, Cantilever Structure, VDOT Std. OSS-1, Type B or C, Less than 30') (Section 713)	EA	4		
431	Prepare & Paint Existing Structure (Overhead Sign Structure, Span Structure, VDOT Std. OSS-1, Type B or C, 31' to 50' length) (Section 713)	EA	4		
432	Prepare & Paint Existing Structure (Overhead Sign Structure, Span Structure, VDOT Std. OSS-1, Type B or C, 51' to 90' length) (Section 713)	EA	2		
433	Prepare & Paint Existing Structure (Overhead Sign Structure, Span Structure, VDOT Std. OSS-1, Type B or C, over 91' length) (Section 713)	EA	2		
434	Street Lighting Foundation (VDOT Std LF-1) (Section 770)	EA	40		
435	Pedestal Pole Foundation (VDOT Std PF-2) (Section 770)	EA	20		
436	Traffic Controller Cabinet Foundation (CF-3, 336S cabinet) (Section 770)	EA	10		
437	Traffic Controller Cabinet Foundation (CF-3, 332 cabinet) (Section 770)	EA	10		
438	Traffic Signal Pole Foundation (VDOT Std PF-1) (Section 770)	CY	200		
439	CCTV Pole Foundation (Section 770)	EA	20		
440	Conduit (2-inch PVC, Sch 40, VDOT Std ECI-1) (Section 716)	LF	400		
441	Conduit (3-inch PVC, Sch 40, VDOT Std ECI-1) (Section 716)	LF	1,000		
442	Conduit (4-inch PVC, Sch 40, VDOT Std ECI-1) (Section 716)	LF	1,200		
443	Conduit (1-inch PVC, Sch 80, VDOT Std ECI-1) (Section 716)	LF	200		

Attachment A-24

ITEM	DESCRIPTION	UNIT	QTY	UNIT PRICE	EXTENSION
444	Conduit (2-inch PVC, Sch 80, VDOT Std ECI-1) (Section 716)	LF	200		
445	Conduit (3-inch PVC, Sch 80, VDOT Std ECI-1) (Section 716)	LF	800		
446	Conduit (4-inch PVC, Sch 80, VDOT Std ECI-1) (Section 716)	LF	1,000		
447	Conduit (2-inch PVC, Sch 40, VDOT Std ECI-1, Jack & Bore) (Section 716)	LF	400		
448	Conduit (3-inch PVC, Sch 40, VDOT Std ECI-1, Jack & Bore) (Section 716)	LF	1,000		
449	Conduit (4-inch PVC, Sch 40, VDOT Std ECI-1, Jack & Bore) (Section 716)	LF	1,200		
450	Conduit (2-inch PVC, Sch 80, VDOT Std ECI-1, Jack & Bore) (Section 716)	LF	200		
451	Conduit (3-inch PVC, Sch 80, VDOT Std ECI-1, Jack & Bore) (Section 716)	LF	800		
452	Conduit (4-inch PVC, Sch 80, VDOT Std ECI-1, Jack & Bore) (Section 716)	LF	1,000		
453	Furnish & Install 2” HDPE SCH 80 conduit (directionally drilled) (Section 716)	LF	600		
454	Furnish & Install 3” HDPE SCH 80 conduit (directionally drilled) (Section 716)	LF	607		
455	Furnish & Install 4” HDPE SCH 80 conduit (directionally drilled) (Section 716)	LF	2,362		
456	Furnish & Install 1” metal conduit (VDOT Std. ECI-1 Trench) (Section 716)	LF	86		
457	Furnish & Install 1-1/2” metal conduit (VDOT Std. ECI-1 Trench) (Section 716)	LF	105		
458	Junction Box (VDOT Std JB-R1) (Section 700)	EA	20		
459	Junction Box (VDOT Std JB-R2) (Section 700)	EA	20		
460	Junction Box (VDOT Std JB-S1) (Section 700)	EA	20		
461	Junction Box (VDOT Std JB-S2) (Section 700)	EA	20		
462	Junction Box (VDOT Std JB-S3) (Section 700)	EA	20		
463	Junction Box Brick Red Color (VDOT Std JB-S1) (Section 700)	EA	20		
464	Junction Box Brick Red Color (VDOT Std JB-S2) (Section 700)	EA	20		
465	Junction Box Brick Red Color (VDOT Std JB-S3) (Section700)	EA	20		

Attachment A-25

ITEM	DESCRIPTION	UNIT	QTY	UNIT PRICE	EXTENSION
466	Furnish Junction Box Lid (VDOT Std JB-R1) (Section 700)	EA	20		
467	Furnish Junction Box Lid (VDOT Std JB-R2) (Section 700)	EA	20		
468	Furnish Junction Box Lid (VDOT Std JB-S1) (Section 700)	EA	20		
469	Furnish Junction Box Lid (VDOT Std JB-S2) (Section 700)	EA	20		
470	Furnish Junction Box Lid (VDOT Std JB-S3) (Section 700)	EA	20		
471	Install Junction Box Lid (VDOT Std JB-R1) (Section 700)	EA	20		
472	Install Junction Box Lid (VDOT Std JB-R2) (Section 700)	EA	20		
473	Install Junction Box Lid (VDOT Std JB-S1) (Section 700)	EA	20		
474	Install Junction Box Lid (VDOT Std JB-S2) (Section 700)	EA	20		
475	Install Junction Box Lid (VDOT Std JB-S3) (Section 700)	EA	20		
476	Furnish & Install Junction Box Lid (VDOT Std JB-R1) (Section 700)	EA	20		
477	Furnish & Install Junction Box Lid (VDOT Std JB-R2) (Section 700)	EA	20		
478	Furnish & Install Junction Box Lid (VDOT Std JB-S1) (Section 700)	EA	20		
479	Furnish & Install Junction Box Lid (VDOT Std JB-S2) (Section 700)	EA	20		
480	Furnish & Install Junction Box Lid (VDOT Std JB-S3) (Section 700)	EA	20		
481	Pedestrian Crossing Flashing Beacon Mast Arm Assembly (Section 875 & Appendix)	EA	5		
482	Pedestrian Crossing Flashing Beacon Mast Arm Assembly (Wireless) (Section 875 & Appendix)	EA	5		
483	School Zone Flashing Beacon Mast Arm Assembly (Section 875 & Appendix)	EA	5		
484	School Zone Flashing Beacon Mast Arm Assembly (Wireless) (Section 875 & Appendix)	EA	5		
485	School Zone Flashing Beacon Pedestal Assembly (Section 875 & Appendix)	EA	5		

Attachment A-26

ITEM	DESCRIPTION	UNIT	QTY	UNIT PRICE	EXTENSION
486	School Zone Flashing Beacon Pedestal Assembly (Wireless) (Section 875 & Appendix)	EA	5		
487	School Zone Flashing Beacon Wood Pole Assembly (Section 875 & Appendix)	EA	5		
	TOTAL BID				**$**

TOTAL UNIT PRICE BID: _____

(use words)

_____ ($ _____)

Attachment A-27

THE CITY OF NORFOLK, VIRGINIA

OFFICE OF THE CITY MANAGER

CONTRACT

THIS AGREEMENT, made as of the **____** day of **_____** in the year **2015**, is between the **City of Norfolk, Virginia**, acting by and through the City Manager, hereinafter styled the **City**, and

party of the second part, hereinafter styled the **Contractor**.

WITNESSETH, That whereas the City has awarded to the Contractor, in accordance with his bid of **September 29, 2015** a contract for **TRAFFIC SIGNALS – INDEFINITE QUANTITY CONTRACT** as described in specifications and drawings prepared therefor by the City of Norfolk and on file in the office of the Director of Public Works of the City of Norfolk, Virginia.

ARTICLE 1 - THE WORK OF THIS CONTRACT

The Contractor shall fully execute the Work described in the Contract Documents, except to the extent specifically indicated in the Contract Documents to be the responsibility of others. The Work under this Contract shall consist of the construction of traffic signals in their entirety or individual components of signals or related communications facilities as they become necessary.

ARTICLE 2 - DATE OF COMMENCEMENT AND COMPLETION TIMES

The Contractor further agrees to begin each Work Order at such a date as the Director of Public Works Department, Norfolk, Virginia, shall notify it to begin via a Notice to Proceed letter, and that it will achieve Substantial Completion of each Work Order within the time mutually agreed upon by the Contractor and the Owner as indicated in each Notice to Proceed letter.

ARTICLE 3 - LIQUIDATED DAMAGES

The Contractor and the City recognize that time is of the essence of this Agreement. In view of the difficulty of ascertaining the loss which the City will suffer by reason of delay in the performance of the Work, the Contractor and the City hereby agree upon as the liquidated damages set below that the City will suffer by reason of delay and/or default, and not as a penalty. Further, the City shall deduct and retain the amount of such liquidated damages out of the moneys which may be due or become due to the Contractor under this Agreement.

Accordingly, should the Contractor fail to achieve Substantial Completion the aforesaid Work in accordance with the contract documents to the satisfaction and approval of the Engineer within the time stipulated in Article 2 above, the Contractor shall pay to the City of Norfolk, Virginia, the appropriate sums as outlined in Section 100 of the specifications per day per Work Order, for every day beyond the Substantial Completion date.

ARTICLE 4 - CONTRACT PRICE

The City shall pay the Contractor for completion of the Work in accordance with the Contract Documents an amount equal to the sum designated per each Work Order. Funds for each individual Work Order will be encumbered when each Work Order is issued. As provided in Subparagraph 7.3.3.2 of the General Conditions of the Contract (as modified), estimated quantities are not guaranteed, and determinations of actual quantities and classifications are to be made by the Engineer's recommendation to the City.

ARTICLE 5 - PAYMENTS

Based upon monthly applications for payment submitted by the Contractor and as approved by the City, the City shall make progress payments on account of each individual Work Order sum to the Contractor as provided in the conditions of the Contract. Full payment or payments shall in no manner be construed as reducing the amount of the bond, or the liability of the surety thereon, until final completion and acceptance of all completed Work Orders in a contract year.

ARTICLE 6 - CONTRACTOR'S REPRESENTATION

To induce the City to enter into this Agreement, the Contractor makes the following representations:

A. Contractor has examined and carefully studied the Contract Documents and other related data identified in the Bidding Documents.

B. Contractor, as a condition of this Contract, will visit the Site and become familiar with and become satisfied as to the general, local, and site conditions that may affect cost, progress, and performance of all Work Orders issued under this Contract.

C. Contractor, as a condition of this contract, will become familiar with and will become satisfied as to all federal, state and local laws and regulations that may affect cost, progress, and performance of Work Orders issued under this Contract.

D. Contractor, as a condition of this Contract, will carefully study all: (1) reports of explorations and tests of subsurface conditions at or contiguous to the Site and all drawings of physical conditions in or relating to existing surface or subsurface structures at or contiguous to the Site which have been provided with each Work Order, and (2) reports and drawings of a hazardous environmental condition, if any, at the site, which have provided with each Work Order.

E. Contractor, as a condition of this Contract, will obtain and carefully study (or assume responsibility for having done so) all additional or supplementary examinations, investigations, explorations, tests, studies, and data concerning conditions (surface, subsurface, and underground facilities) at or contiguous to the Site which may affect costs, progress, or performance of Work Orders issued under this Contract.

F. Contractor, as a condition of this Contract, will become aware of the general nature of Work to be performed by City and others at the Site that relates to Work Orders issued under this Contract.

G. Contract has given Engineer written notice of all conflicts, errors, ambiguities, or discrepancies that Contractor has discovered in the Contract Documents, and the written resolution thereof by Engineer is

acceptable to Contractor.

H. Work Orders issued under this Contract will be generally sufficient to indicate and convey understanding of all terms and conditions for performance and furnishing of the Work.

I. Contractor hereby certifies that it has familiarized itself with Sections 33.1-86 through 33.1-93 of the Code of the City of Norfolk, Virginia, 1979, as amended, entitled "Ethics in Public Contracting," including the additional statutes set forth in Section 33.1-86 thereof, and further that all amounts received by the Contractor pursuant to this Agreement are proper and in accordance therewith.

J. Contractor hereby certifies that at all times during which any term of this Contract is in effect, it does not and shall not knowingly employ any unauthorized alien. For purposes of this section, an “unauthorized alien” shall mean any alien who is neither lawfully admitted for permanent residence in the United States nor authorized to be employed by either Title 8, section 1324a of the United States Code or the U.S. Attorney General.

K. Contractor hereby represents that it is organized as a stock or non-stock corporation, limited liability company, business trust, or limited partnership or registered as a registered limited liability partnership and is authorized to transact business in the Commonwealth as a domestic or foreign business entity if so required by Title 13.1 or Title 50 or as otherwise required by law.

ARTICLE 7 - CONTRACT DOCUMENTS

The Contract Documents consist of the following:

a. Invitation for Bids

b. Instructions to Bidders

c. Bid Form/Affidavit

d. Bid Bond

e. Contract

f. Performance Bond

g. Payment Bond

h. AIA A201-2007, “General Conditions of the Contract for Construction” (as modified)

i. Certificate of Insurance

j. Notice of Award

k. Notice to Proceed

l. Change Orders (if any)

m. Other Documents as may be required by law or appended hereto

n. Specifications prepared or issued by: **City of Norfolk, Department of Public Works.**

o. Addendum (as listed in Bid Form)

****

Witness the following signatures and seals:

Witness:

_____ _____
Contractor

_____
Signature

_____
Printed Name

Seal if Incorporated

_____
Title

Virginia State Contractor's License No. _____

City of Norfolk Business License No. _____

Contents Approved: _____
Director of Public Works

Approved as to form and correctness: _____
Deputy City Attorney

CITY OF NORFOLK, VIRGINIA

By_____
City Manager

Attest: _____
City Clerk

End of Page

Certification of Funds

I hereby certify that the money required for this contract (agreement, obligation or expenditure) is in the City Treasury to the credit of the fund from which it is to be drawn, and not appropriated for any other purpose.

Account: _____ Amount: **N/A**

Contract No.: _____ Vendor Code: _____

_____

Director of Finance Date

End of Page

PERFORMANCE BOND

Bond No. _____
Amount: **$1,000,000.00**

KNOW ALL PERSONS BY THESE PRESENTS, that _____ of _____, hereinafter called the Contractor and _____, a corporation duly organized and existing under and by virtue of the laws of the State of _____, hereinafter called the Surety, and authorized to transact business within the Commonwealth of Virginia as the Surety, are held and firmly bound unto the City of Norfolk as Owner, in the sum of **One Million Dollars and Zero Cents ($1,000,000.00)**, lawful money of the United States of America, for payment of which, well and truly be made to the Owner, the Contractor and the Surety bind themselves and each of their heirs, executors, administrators, successors, and assigns, jointly and severally, firmly by these presents as follows:

THE CONDITION OF THE ABOVE OBLIGATION IS SUCH THAT:

WHEREAS, the Contractor has executed and entered into a certain Agreement, hereto attached, with the Owner dated _____, 2015, for

TRAFFIC SIGNALS – INDEFINITE QUANTITY CONTRACT

NOW THEREFORE, if the Contractor, and its successors and assigns, shall at all times duly, promptly, and faithfully perform the Work and any alteration in or addition to the obligations of the Contractor arising thereunder, including the matter of infringement, if any, of patents or other proprietary rights, and shall assure all guarantees against defective workmanship and materials, including the guarantee period following final completion by the Contractor and final acceptance by the Owner and comply with all the covenants therein contained in the Specifications, Drawings, and other Contract Documents required to be performed by the Contractor, in the manner and within the times provided in the Agreement, and shall fully indemnify and save harmless the Owner from all costs and damage which it may suffer by reason or failure to do so, and shall fully reimburse and repay it all outlay and expenses which it may incur in making good any default, and reasonable counsel fees incurred in the prosecution of or defense of any action arising out of or in connection with any such default, then this obligation shall be void; otherwise to remain in full force and effect.

PROVIDED, HOWEVER, that the Surety, for value received, for itself and its successors and assigns, hereby stipulates and agrees that no change, extension of time, alteration, or addition to the terms of the Contract Documents or to the Work to be performed thereunder, or payment thereunder before the time required therein, or waiver of any provision thereof, or assignment, subletting or transfer thereof or any part thereof, shall in any way affect its obligation on this Bond, and it does hereby waive notice of any such change, extension of time, alteration, addition to the terms of the Contract Documents or any such payment, waiver, assignment, subcontract or transfer.

PROVIDED, FURTHER, that no final settlement between the Owner and the Contractor shall abridge the right of any beneficiary hereunder, whose claim may be unsatisfied.

Whenever Contractor shall be declared by Owner to be in default under the Contract, the Owner having performed Owner's obligations thereunder, the Owner shall have the right, at its option, to require the Surety to promptly proceed to remedy the default within 30 days of notice by proceeding or procuring others to proceed with completing the Agreement with its terms and conditions including the correction of any defective work and the provision of safety measures required as the result of such default; and all reserves, deferred payments, and other funds provided by the Agreement to be paid to Contractor shall be paid to Surety at the same times and under the same conditions as by the terms of that Agreement such fund would have been paid to Contractor had the Agreement been performed by Contractor; and Surety shall be entitled to such funds in preference to any

assignee of Principal of any adverse claimant. Notwithstanding the above, the Owner shall have the right, with the approval of the Surety which shall not be unreasonably withheld, to take over and assume completion of the Agreement and be promptly paid in cash by the Surety for the cost of such completion less the balance of the Contract price.

IN WITNESS WHEREOF, all above parties bounded together have executed this instrument this _____ day of _____, 2015, the name and corporate seal of each corporate party being hereto affixed and those presents duly signed by its undersigned representative, pursuant to authority of its governing body.

CONTRACTOR

(_____)

(SEAL)

_____
Written Signature

_____
Printed Signature

_____
Title *Date*

_____
Attest

SURETY

_____

By:_____(Seal)

_____
Attest

APPROVED AS TO FORM: _____, 2015

City of Norfolk, OWNER

By: _____
Deputy City Attorney

NOTE: Date of Bond shall not be prior to the date of the Agreement. If the Contractor is a partnership, all partners shall execute the Bond.

IMPORTANT: The Surety named on this Bond shall be one who is licensed to conduct business in the Commonwealth of Virginia, and named in the current list of Companies Holding Certificates of Authority as Acceptable Sureties on Federal Bonds and as Acceptable Reinsuring Companies, as published in Circular 570 (amended) by the Audit Staff Bureau of Accounts, U.S. Treasury Department. All Bonds signed by an agent shall be accompanied by a certified copy of the authority to act for the Surety at the time of signing of this Bond.

PAYMENT BOND

Bond No._____
Amount: **$1,000,000.00**

KNOW ALL PERSONS BY THESE PRESENTS, that _____ **of** _____**,** hereinafter called the Contractor and _____, a corporation duly organized and existing under and by virtue of the laws of the State _____, hereinafter called the Surety, and authorized to transact business within the Commonwealth of Virginia as the Surety, are held and firmly bound unto the City of Norfolk as Owner, in the sum of **ONE MILLION DOLLARS AND ZERO CENTS ($1,000,000.00)**, lawful money of the United States of America, for payment of which, well and truly be made to the Owner, the Contractor and the Surety bind themselves and each of their heirs, executors, administrators, successors, and assigns, jointly and severally, firmly by these presents as follows:

THE CONDITION OF THE ABOVE OBLIGATION IS SUCH THAT:

WHEREAS, the Contractor has executed and entered into a certain Agreement, hereto attached, with the Owner dated _____, 2015, for

TRAFFIC SIGNALS – INDEFINITE QUANTITY CONTRACT

NOW THEREFORE, if the Contractor shall promptly make payments to all persons, firms, subcontractors, and corporations furnishing materials for or performing labor in the prosecution of the Work provided for in the Agreement, and any authorized extension or modification thereof, including all amounts due for materials, lubricants, oil, gasoline, repairs on machinery, equipment, and tools consumed, used or rented in connection with the construction of the Work, and all insurance premiums on the Work, and for all labor performed in the Work, whether by Subcontractor or otherwise, then this obligation shall be void, otherwise to remain in full force and effect.

PROVIDED, HOWEVER, that the Surety, for value received, hereby stipulates and agrees that no change, extension of time, alteration, or addition to the terms of the Contract Documents or to the Work to be performed thereunder, shall in any way affect its obligation on this Bond, and it does hereby waive notice of any such change, extension of time, alteration, or addition to the terms of the Contract Documents.

PROVIDED, FURTHER, that no final settlement between the Owner and the Contractor shall abridge the right of any beneficiary hereunder, whose claim may be unsatisfied.

IN WITNESS WHEREOF, all above parties bounded together have executed this instrument this ____ day of _____, 2015, the name and corporate seal of each corporate party being hereto affixed and those presents duly signed by its undersigned representative, pursuant to authority of its governing body.

CONTRACTOR

(_____)

By:_____(Seal)

Name: _____

Title: _____

_____
Attest

SURETY

_____

By: _____(Seal)

_____
Attest

APPROVED AS TO FORM: _____, 2015

City of Norfolk, OWNER

By: _____
Deputy City Attorney

NOTE: Date of Bond shall not be prior to the date of the Agreement. If the Contractor is a partnership, all partners shall execute the Bond.

IMPORTANT: The Surety named on this Bond shall be one who is licensed to conduct business in the Commonwealth of Virginia, and named in the current list of Companies Holding Certificates of Authority as Acceptable Sureties on Federal Bonds and as Acceptable Reinsuring Companies, as published in Circular 570 (amended) by the Audit Staff Bureau of Accounts, U.S. Treasury Department. All Bonds signed by an agent shall be accompanied by a certified copy of the authority to act for the Surety at the time of signing of this Bond.

End of Page

AIA® Document A201™ – 2007

General Conditions of the Contract for Construction

for the following PROJECT:
(Name and location or address)
Traffic Signals - Indefinite Quantity Contract

THE CITY OF NORFOLK, a municipal corporation of the Commonwealth of Virginia, hereinafter called the "City" or the OWNER:
(Name, legal status and address)

This document has important legal consequences. Consultation with an attorney is encouraged with respect to its completion or modification.

THE ARCHITECT:
(Name, legal status and address)

TABLE OF ARTICLES

1 GENERAL PROVISIONS

2 OWNER

3 CONTRACTOR

4 ARCHITECT

5 SUBCONTRACTORS

6 CONSTRUCTION BY OWNER OR BY SEPARATE CONTRACTORS

7 CHANGES IN THE WORK

8 TIME

9 PAYMENTS AND COMPLETION

10 PROTECTION OF PERSONS AND PROPERTY

11 INSURANCE AND BONDS

12 UNCOVERING AND CORRECTION OF WORK

13 MISCELLANEOUS PROVISIONS

14 TERMINATION OR SUSPENSION OF THE CONTRACT

15 CLAIMS AND DISPUTES

Init.
/

AIA Document A201™ – 2007. Copyright © 1911, 1915, 1918, 1925, 1937, 1951, 1958, 1961, 1963, 1966, 1970, 1976, 1987, 1997 and 2007 by The American Institute of Architects. **All rights reserved.** WARNING: This AIA® Document is protected by U.S. Copyright Law and International Treaties. Unauthorized reproduction or distribution of this AIA® Document, or any portion of it, may result in severe civil and criminal penalties, and will be prosecuted to the maximum extent possible under the law. This document was produced by AIA software at 14:20:30 on 03/31/2015 under Order No.6386580634_1 which expires on 08/14/2015, and is not for resale.
User Notes: (1865697126)

INDEX

(Topics and numbers in bold are section headings.)

Acceptance of Nonconforming Work
9.6.6, 9.9.3, **12.3**
Acceptance of Work
9.6.6, 9.8.2, 9.9.3, 9.10.1, 9.10.3, 12.3
Access to Work
3.16, 6.2.1, 12.1
Accident Prevention
10
Acts and Omissions
3.2, 3.3.2, 3.12.8, 3.18, 4.2.3, 8.3.1, 9.5.1, 10.2.5, 10.2.8, 13.4.2, 13.7, 14.1, 15.2
Addenda
1.1.1, 3.11
Additional Costs, Claims for
3.7.4, 3.7.5, 6.1.1, 7.3.7.5, 10.3, 15.1.4
Additional Inspections and Testing
9.4.2, 9.8.3, 12.2.1, **13.5**
Additional Insured
11.1.4
Additional Time, Claims for
3.2.4, 3.7.4, 3.7.5, 3.10.2, 8.3.2, **15.1.5**
Administration of the Contract
3.1.3, **4.2**, 9.4, 9.5
Advertisement or Invitation to Bid
1.1.1
Aesthetic Effect
4.2.13
Allowances
3.8, 7.3.8
All-risk Insurance
11.3.1, 11.3.1.1
Applications for Payment
4.2.5, 7.3.9, 9.2, **9.3**, 9.4, 9.5.1, 9.6.3, 9.7, 9.10, 11.1.3
Approvals
2.1.1, 2.2.2, 2.4, 3.1.3, 3.10.2, 3.12.8, 3.12.9, 3.12.10, 4.2.7, 9.3.2, 13.5.1
Arbitration
8.3.1, 11.3.10, 13.1, 15.3.2, **15.4**
ARCHITECT
4
Architect, Definition of
4.1.1
Architect, Extent of Authority
2.4, 3.12.7, 4.1, 4.2, 5.2, 6.3, 7.1.2, 7.3.7, 7.4, 9.2, 9.3.1, 9.4, 9.5, 9.6.3, 9.8, 9.10.1, 9.10.3, 12.1, 12.2.1, 13.5.1, 13.5.2, 14.2.2, 14.2.4, 15.1.3, 15.2.1
Architect, Limitations of Authority and Responsibility
2.1.1, 3.12.4, 3.12.8, 3.12.10, 4.1.2, 4.2.1, 4.2.2, 4.2.3, 4.2.6, 4.2.7, 4.2.10, 4.2.12, 4.2.13, 5.2.1, 7.4, 9.4.2, 9.5.3, 9.6.4, 15.1.3, 15.2
Architect's Additional Services and Expenses
2.4, 11.3.1.1, 12.2.1, 13.5.2, 13.5.3, 14.2.4
Architect's Administration of the Contract
3.1.3, 4.2, 3.7.4, 15.2, 9.4.1, 9.5
Architect's Approvals
2.4, 3.1.3, 3.5, 3.10.2, 4.2.7
Architect's Authority to Reject Work
3.5, 4.2.6, 12.1.2, 12.2.1
Architect's Copyright
1.1.7, 1.5
Architect's Decisions
3.7.4, 4.2.6, 4.2.7, 4.2.11, 4.2.12, 4.2.13, 4.2.14, 6.3, 7.3.7, 7.3.9, 8.1.3, 8.3.1, 9.2, 9.4.1, 9.5, 9.8.4, 9.9.1, 13.5.2, 15.2, 15.3
Architect's Inspections
3.7.4, 4.2.2, 4.2.9, 9.4.2, 9.8.3, 9.9.2, 9.10.1, 13.5
Architect's Instructions
3.2.4, 3.3.1, 4.2.6, 4.2.7, 13.5.2
Architect's Interpretations
4.2.11, 4.2.12
Architect's Project Representative
4.2.10
Architect's Relationship with Contractor
1.1.2, 1.5, 3.1.3, 3.2.2, 3.2.3, 3.2.4, 3.3.1, 3.4.2, 3.5, 3.7.4, 3.7.5, 3.9.2, 3.9.3, 3.10, 3.11, 3.12, 3.16, 3.18, 4.1.2, 4.1.3, 4.2, 5.2, 6.2.2, 7, 8.3.1, 9.2, 9.3, 9.4, 9.5, 9.7, 9.8, 9.9, 10.2.6, 10.3, 11.3.7, 12, 13.4.2, 13.5, 15.2
Architect's Relationship with Subcontractors
1.1.2, 4.2.3, 4.2.4, 4.2.6, 9.6.3, 9.6.4, 11.3.7
Architect's Representations
9.4.2, 9.5.1, 9.10.1
Architect's Site Visits
3.7.4, 4.2.2, 4.2.9, 9.4.2, 9.5.1, 9.9.2, 9.10.1, 13.5
Asbestos
10.3.1
Attorneys' Fees
3.18.1, 9.10.2, 10.3.3
Award of Separate Contracts
6.1.1, 6.1.2
Award of Subcontracts and Other Contracts for Portions of the Work
5.2
Basic Definitions
1.1
Bidding Requirements
1.1.1, 5.2.1, 11.4.1
Binding Dispute Resolution
9.7, 11.3.9, 11.3.10, 13.1, 15.2.5, 15.2.6.1, 15.3.1, 15.3.2, 15.4.1
Boiler and Machinery Insurance
11.3.2
Bonds, Lien
7.3.7.4, 9.10.2, 9.10.3
Bonds, Performance, and Payment
7.3.7.4, 9.6.7, 9.10.3, 11.3.9, **11.4**

Init. /

AIA Document A201™ – 2007. Copyright © 1911, 1915, 1918, 1925, 1937, 1951, 1958, 1961, 1963, 1966, 1970, 1976, 1987, 1997 and 2007 by The American Institute of Architects. All rights reserved. WARNING: This AIA® Document is protected by U.S. Copyright Law and International Treaties. Unauthorized reproduction or distribution of this AIA® Document, or any portion of it, may result in severe civil and criminal penalties, and will be prosecuted to the maximum extent possible under the law. This document was produced by AIA software at 14:20:30 on 03/31/2015 under Order No.6386580634_1 which expires on 08/14/2015, and is not for resale.
User Notes: (1865697126)

Building Permit
3.7.1
Capitalization
1.3
Certificate of Substantial Completion
9.8.3, 9.8.4, 9.8.5
Certificates for Payment
4.2.1, 4.2.5, 4.2.9, 9.3.3, **9.4**, 9.5, 9.6.1, 9.6.6, 9.7, 9.10.1, 9.10.3, 14.1.1.3, 14.2.4, 15.1.3
Certificates of Inspection, Testing or Approval
13.5.4
Certificates of Insurance
9.10.2, 11.1.3
Change Orders
1.1.1, 2.4, 3.4.2, 3.7.4, 3.8.2.3, 3.11, 3.12.8, 4.2.8, 5.2.3, 7.1.2, 7.1.3, **7.2**, 7.3.2, 7.3.6, 7.3.9, 7.3.10, 8.3.1, 9.3.1.1, 9.10.3, 10.3.2, 11.3.1.2, 11.3.4, 11.3.9, 12.1.2, 15.1.3
Change Orders, Definition of
7.2.1
CHANGES IN THE WORK
2.2.1, 3.11, 4.2.8, **7**, 7.2.1, 7.3.1, 7.4, 8.3.1, 9.3.1.1, 11.3.9
Claims, Definition of
15.1.1
CLAIMS AND DISPUTES
3.2.4, 6.1.1, 6.3, 7.3.9, 9.3.3, 9.10.4, 10.3.3, **15**, 15.4
Claims and Timely Assertion of Claims
15.4.1
Claims for Additional Cost
3.2.4, 3.7.4, 6.1.1, 7.3.9, 10.3.2, **15.1.4**
Claims for Additional Time
3.2.4, 3.7.4, 6.1.1, 8.3.2, 10.3.2, **15.1.5**
Concealed or Unknown Conditions, Claims for
3.7.4
Claims for Damages
3.2.4, 3.18, 6.1.1, 8.3.3, 9.5.1, 9.6.7, 10.3.3, 11.1.1, 11.3.5, 11.3.7, 14.1.3, 14.2.4, 15.1.6
Claims Subject to Arbitration
15.3.1, 15.4.1
Cleaning Up
3.15, 6.3
Commencement of the Work, Conditions Relating to
2.2.1, 3.2.2, 3.4.1, 3.7.1, 3.10.1, 3.12.6, 5.2.1, 5.2.3, 6.2.2, 8.1.2, 8.2.2, 8.3.1, 11.1, 11.3.1, 11.3.6, 11.4.1, 15.1.4
Commencement of the Work, Definition of
8.1.2
Communications Facilitating Contract Administration
3.9.1, **4.2.4**
Completion, Conditions Relating to
3.4.1, 3.11, 3.15, 4.2.2, 4.2.9, 8.2, 9.4.2, 9.8, 9.9.1, 9.10, 12.2, 13.7, 14.1.2
COMPLETION, PAYMENTS AND
9
Completion, Substantial
4.2.9, 8.1.1, 8.1.3, 8.2.3, 9.4.2, 9.8, 9.9.1, 9.10.3, 12.2, 13.7
Compliance with Laws
1.6, 3.2.3, 3.6, 3.7, 3.12.10, 3.13, 4.1.1, 9.6.4, 10.2.2, 11.1, 11.3, 13.1, 13.4, 13.5.1, 13.5.2, 13.6, 14.1.1, 14.2.1.3, 15.2.8, 15.4.2, 15.4.3
Concealed or Unknown Conditions
3.7.4, 4.2.8, 8.3.1, 10.3
Conditions of the Contract
1.1.1, 6.1.1, 6.1.4
Consent, Written
3.4.2, 3.7.4, 3.12.8, 3.14.2, 4.1.2, 9.3.2, 9.8.5, 9.9.1, 9.10.2, 9.10.3, 11.3.1, 13.2, 13.4.2, 15.4.4.2
Consolidation or Joinder
15.4.4
CONSTRUCTION BY OWNER OR BY SEPARATE CONTRACTORS
1.1.4, **6**
Construction Change Directive, Definition of
7.3.1
Construction Change Directives
1.1.1, 3.4.2, 3.12.8, 4.2.8, 7.1.1, 7.1.2, 7.1.3, **7.3**, 9.3.1.1
Construction Schedules, Contractor's
3.10, 3.12.1, 3.12.2, 6.1.3, 15.1.5.2
Contingent Assignment of Subcontracts
5.4, 14.2.2.2
Continuing Contract Performance
15.1.3
Contract, Definition of
1.1.2
CONTRACT, TERMINATION OR SUSPENSION OF THE
5.4.1.1, 11.3.9, **14**
Contract Administration
3.1.3, 4, 9.4, 9.5
Contract Award and Execution, Conditions Relating to
3.7.1, 3.10, 5.2, 6.1, 11.1.3, 11.3.6, 11.4.1
Contract Documents, Copies Furnished and Use of
1.5.2, 2.2.5, 5.3
Contract Documents, Definition of
1.1.1
Contract Sum
3.7.4, 3.8, 5.2.3, 7.2, 7.3, 7.4, **9.1**, 9.4.2, 9.5.1.4, 9.6.7, 9.7, 10.3.2, 11.3.1, 14.2.4, 14.3.2, 15.1.4, 15.2.5
Contract Sum, Definition of
9.1
Contract Time
3.7.4, 3.7.5, 3.10.2, 5.2.3, 7.2.1.3, 7.3.1, 7.3.5, 7.4, 8.1.1, 8.2.1, 8.3.1, 9.5.1, 9.7, 10.3.2, 12.1.1, 14.3.2, 15.1.5.1, 15.2.5
Contract Time, Definition of
8.1.1

AIA Document A201™ – 2007. Copyright © 1911, 1915, 1918, 1925, 1937, 1951, 1958, 1961, 1963, 1966, 1970, 1976, 1987, 1997 and 2007 by The American Institute of Architects. **All rights reserved.** WARNING: This AIA® Document is protected by U.S. Copyright Law and International Treaties. Unauthorized reproduction or distribution of this AIA® Document, or any portion of it, may result in severe civil and criminal penalties, and will be prosecuted to the maximum extent possible under the law. This document was produced by AIA software at 14:20:30 on 03/31/2015 under Order No.6386580634_1 which expires on 08/14/2015, and is not for resale.
User Notes:
(1865697126)

CONTRACTOR
3
Contractor, Definition of
3.1, 6.1.2
Contractor's Construction Schedules
3.10, 3.12.1, 3.12.2, 6.1.3, 15.1.5.2
Contractor's Employees
3.3.2, 3.4.3, 3.8.1, 3.9, 3.18.2, 4.2.3, 4.2.6, 10.2, 10.3, 11.1.1, 11.3.7, 14.1, 14.2.1.1
Contractor's Liability Insurance
11.1
Contractor's Relationship with Separate Contractors and Owner's Forces
3.12.5, 3.14.2, 4.2.4, 6, 11.3.7, 12.1.2, 12.2.4
Contractor's Relationship with Subcontractors
1.2.2, 3.3.2, 3.18.1, 3.18.2, 5, 9.6.2, 9.6.7, 9.10.2, 11.3.1.2, 11.3.7, 11.3.8
Contractor's Relationship with the Architect
1.1.2, 1.5, 3.1.3, 3.2.2, 3.2.3, 3.2.4, 3.3.1, 3.4.2, 3.5, 3.7.4, 3.10, 3.11, 3.12, 3.16, 3.18, 4.1.3, 4.2, 5.2, 6.2.2, 7, 8.3.1, 9.2, 9.3, 9.4, 9.5, 9.7, 9.8, 9.9, 10.2.6, 10.3, 11.3.7, 12, 13.5, 15.1.2, 15.2.1
Contractor's Representations
3.2.1, 3.2.2, 3.5, 3.12.6, 6.2.2, 8.2.1, 9.3.3, 9.8.2
Contractor's Responsibility for Those Performing the Work
3.3.2, 3.18, 5.3, 6.1.3, 6.2, 9.5.1, 10.2.8
Contractor's Review of Contract Documents
3.2
Contractor's Right to Stop the Work
9.7
Contractor's Right to Terminate the Contract
14.1, 15.1.6
Contractor's Submittals
3.10, 3.11, 3.12.4, 4.2.7, 5.2.1, 5.2.3, 9.2, 9.3, 9.8.2, 9.8.3, 9.9.1, 9.10.2, 9.10.3, 11.1.3, 11.4.2
Contractor's Superintendent
3.9, 10.2.6
Contractor's Supervision and Construction Procedures
1.2.2, 3.3, 3.4, 3.12.10, 4.2.2, 4.2.7, 6.1.3, 6.2.4, 7.1.3, 7.3.5, 7.3.7, 8.2, 10, 12, 14, 15.1.3
Contractual Liability Insurance
11.1.1.8, 11.2
Coordination and Correlation
1.2, 3.2.1, 3.3.1, 3.10, 3.12.6, 6.1.3, 6.2.1
Copies Furnished of Drawings and Specifications
1.5, 2.2.5, 3.11
Copyrights
1.5, **3.17**
Correction of Work
2.3, 2.4, 3.7.3, 9.4.2, 9.8.2, 9.8.3, 9.9.1, 12.1.2, **12.2**
Correlation and Intent of the Contract Documents
1.2
Cost, Definition of
7.3.7
Costs
2.4, 3.2.4, 3.7.3, 3.8.2, 3.15.2, 5.4.2, 6.1.1, 6.2.3, 7.3.3.3, 7.3.7, 7.3.8, 7.3.9, 9.10.2, 10.3.2, 10.3.6, 11.3, 12.1.2, 12.2.1, 12.2.4, 13.5, 14
Cutting and Patching
3.14, 6.2.5
Damage to Construction of Owner or Separate Contractors
3.14.2, 6.2.4, 10.2.1.2, 10.2.5, 10.4, 11.1.1, 11.3, 12.2.4
Damage to the Work
3.14.2, 9.9.1, 10.2.1.2, 10.2.5, 10.4, 11.3.1, 12.2.4
Damages, Claims for
3.2.4, 3.18, 6.1.1, 8.3.3, 9.5.1, 9.6.7, 10.3.3, 11.1.1, 11.3.5, 11.3.7, 14.1.3, 14.2.4, 15.1.6
Damages for Delay
6.1.1, 8.3.3, 9.5.1.6, 9.7, 10.3.2
Date of Commencement of the Work, Definition of
8.1.2
Date of Substantial Completion, Definition of
8.1.3
Day, Definition of
8.1.4
Decisions of the Architect
3.7.4, 4.2.6, 4.2.7, 4.2.11, 4.2.12, 4.2.13, 15.2, 6.3, 7.3.7, 7.3.9, 8.1.3, 8.3.1, 9.2, 9.4, 9.5.1, 9.8.4, 9.9.1, 13.5.2, 14.2.2, 14.2.4, 15.1, 15.2
Decisions to Withhold Certification
9.4.1, **9.5**, 9.7, 14.1.1.3
Defective or Nonconforming Work, Acceptance, Rejection and Correction of
2.3, 2.4, 3.5, 4.2.6, 6.2.5, 9.5.1, 9.5.2, 9.6.6, 9.8.2, 9.9.3, 9.10.4, 12.2.1
Definitions
1.1, 2.1.1, 3.1.1, 3.5, 3.12.1, 3.12.2, 3.12.3, 4.1.1, 15.1.1, 5.1, 6.1.2, 7.2.1, 7.3.1, 8.1, 9.1, 9.8.1
Delays and Extensions of Time
3.2, 3.7.4, 5.2.3, 7.2.1, 7.3.1, 7.4, **8.3**, 9.5.1, 9.7, 10.3.2, 10.4, 14.3.2, 15.1.5, 15.2.5
Disputes
6.3, 7.3.9, 15.1, 15.2
Documents and Samples at the Site
3.11
Drawings, Definition of
1.1.5
Drawings and Specifications, Use and Ownership of
3.11
Effective Date of Insurance
8.2.2, 11.1.2
Emergencies
10.4, 14.1.1.2, 15.1.4
Employees, Contractor's
3.3.2, 3.4.3, 3.8.1, 3.9, 3.18.2, 4.2.3, 4.2.6, 10.2, 10.3.3, 11.1.1, 11.3.7, 14.1, 14.2.1.1

AIA Document A201™ – 2007. Copyright © 1911, 1915, 1918, 1925, 1937, 1951, 1958, 1961, 1963, 1966, 1970, 1976, 1987, 1997 and 2007 by The American Institute of Architects. **All rights reserved.** WARNING: This AIA® Document is protected by U.S. Copyright Law and International Treaties. Unauthorized reproduction or distribution of this AIA® Document, or any portion of it, may result in severe civil and criminal penalties, and will be prosecuted to the maximum extent possible under the law. This document was produced by AIA software at 14:20:30 on 03/31/2015 under Order No.6386580634_1 which expires on 08/14/2015, and is not for resale.
User Notes: (1865697126)

Equipment, Labor, Materials or
1.1.3, 1.1.6, 3.4, 3.5, 3.8.2, 3.8.3, 3.12, 3.13, 3.15.1, 4.2.6, 4.2.7, 5.2.1, 6.2.1, 7.3.7, 9.3.2, 9.3.3, 9.5.1.3, 9.10.2, 10.2.1, 10.2.4, 14.2.1.1, 14.2.1.2
Execution and Progress of the Work
1.1.3, 1.2.1, 1.2.2, 2.2.3, 2.2.5, 3.1, 3.3.1, 3.4.1, 3.5, 3.7.1, 3.10.1, 3.12, 3.14, 4.2, 6.2.2, 7.1.3, 7.3.5, 8.2, 9.5.1, 9.9.1, 10.2, 10.3, 12.2, 14.2, 14.3.1, 15.1.3
Extensions of Time
3.2.4, 3.7.4, 5.2.3, 7.2.1, 7.3, 7.4, 9.5.1, 9.7, 10.3.2, 10.4, 14.3, 15.1.5, 15.2.5
Failure of Payment
9.5.1.3, **9.7**, 9.10.2, 13.6, 14.1.1.3, 14.2.1.2
Faulty Work
(See Defective or Nonconforming Work)
Final Completion and Final Payment
4.2.1, 4.2.9, 9.8.2, **9.10**, 11.1.2, 11.1.3, 11.3.1, 11.3.5, 12.3, 14.2.4, 14.4.3
Financial Arrangements, Owner's
2.2.1, 13.2.2, 14.1.1.4
Fire and Extended Coverage Insurance
11.3.1.1
GENERAL PROVISIONS
1
Governing Law
13.1
Guarantees (See Warranty)
Hazardous Materials
10.2.4, **10.3**
Identification of Subcontractors and Suppliers
5.2.1
Indemnification
3.17, **3.18**, 9.10.2, 10.3.3, 10.3.5, 10.3.6, 11.3.1.2, 11.3.7
Information and Services Required of the Owner
2.1.2, **2.2**, 3.2.2, 3.12.4, 3.12.10, 6.1.3, 6.1.4, 6.2.5, 9.6.1, 9.6.4, 9.9.2, 9.10.3, 10.3.3, 11.2, 11.4, 13.5.1, 13.5.2, 14.1.1.4, 14.1.4, 15.1.3
Initial Decision
15.2
Initial Decision Maker, Definition of
1.1.8
Initial Decision Maker, Decisions
14.2.2, 14.2.4, 15.2.1, 15.2.2, 15.2.3, 15.2.4, 15.2.5
Initial Decision Maker, Extent of Authority
14.2.2, 14.2.4, 15.1.3, 15.2.1, 15.2.2, 15.2.3, 15.2.4, 15.2.5
Injury or Damage to Person or Property
10.2.8, 10.4
Inspections
3.1.3, 3.3.3, 3.7.1, 4.2.2, 4.2.6, 4.2.9, 9.4.2, 9.8.3, 9.9.2, 9.10.1, 12.2.1, 13.5
Instructions to Bidders
1.1.1
Instructions to the Contractor
3.2.4, 3.3.1, 3.8.1, 5.2.1, 7, 8.2.2, 12, 13.5.2
Instruments of Service, Definition of
1.1.7
Insurance
3.18.1, 6.1.1, 7.3.7, 9.3.2, 9.8.4, 9.9.1, 9.10.2, **11**
Insurance, Boiler and Machinery
11.3.2
Insurance, Contractor's Liability
11.1
Insurance, Effective Date of
8.2.2, 11.1.2
Insurance, Loss of Use
11.3.3
Insurance, Owner's Liability
11.2
Insurance, Property
10.2.5, **11.3**
Insurance, Stored Materials
9.3.2
INSURANCE AND BONDS
11
Insurance Companies, Consent to Partial Occupancy
9.9.1
Intent of the Contract Documents
1.2.1, 4.2.7, 4.2.12, 4.2.13, 7.4
Interest
13.6
Interpretation
1.2.3, **1.4**, 4.1.1, 5.1, 6.1.2, 15.1.1
Interpretations, Written
4.2.11, 4.2.12, 15.1.4
Judgment on Final Award
15.4.2
Labor and Materials, Equipment
1.1.3, 1.1.6, **3.4**, 3.5, 3.8.2, 3.8.3, 3.12, 3.13, 3.15.1, 4.2.6, 4.2.7, 5.2.1, 6.2.1, 7.3.7, 9.3.2, 9.3.3, 9.5.1.3, 9.10.2, 10.2.1, 10.2.4, 14.2.1.1, 14.2.1.2
Labor Disputes
8.3.1
Laws and Regulations
1.5, 3.2.3, 3.6, 3.7, 3.12.10, 3.13, 4.1.1, 9.6.4, 9.9.1, 10.2.2, 11.1.1, 11.3, 13.1, 13.4, 13.5.1, 13.5.2, 13.6, 14, 15.2.8, 15.4
Liens
2.1.2, 9.3.3, 9.10.2, 9.10.4, 15.2.8
Limitations, Statutes of
12.2.5, 13.7, 15.4.1.1
Limitations of Liability
2.3, 3.2.2, 3.5, 3.12.10, 3.17, 3.18.1, 4.2.6, 4.2.7, 4.2.12, 6.2.2, 9.4.2, 9.6.4, 9.6.7, 10.2.5, 10.3.3, 11.1.2, 11.2, 11.3.7, 12.2.5, 13.4.2
Limitations of Time
2.1.2, 2.2, 2.4, 3.2.2, 3.10, 3.11, 3.12.5, 3.15.1, 4.2.7, 5.2, 5.3, 5.4.1, 6.2.4, 7.3, 7.4, 8.2, 9.2, 9.3.1, 9.3.3, 9.4.1, 9.5, 9.6, 9.7, 9.8, 9.9, 9.10, 11.1.3, 11.3.1.5, 11.3.6, 11.3.10, 12.2, 13.5, 13.7, 14, 15
Loss of Use Insurance
11.3.3

AIA Document A201™ – 2007. Copyright © 1911, 1915, 1918, 1925, 1937, 1951, 1958, 1961, 1963, 1966, 1970, 1976, 1987, 1997 and 2007 by The American Institute of Architects. **All rights reserved.** WARNING: This AIA® Document is protected by U.S. Copyright Law and International Treaties. Unauthorized reproduction or distribution of this AIA® Document, or any portion of it, may result in severe civil and criminal penalties, and will be prosecuted to the maximum extent possible under the law. This document was produced by AIA software at 14:20:30 on 03/31/2015 under Order No.6386580634_1 which expires on 08/14/2015, and is not for resale.
User Notes: (1865697126)

Material Suppliers
1.5, 3.12.1, 4.2.4, 4.2.6, 5.2.1, 9.3, 9.4.2, 9.6, 9.10.5
Materials, Hazardous
10.2.4, **10.3**
Materials, Labor, Equipment and
1.1.3, 1.1.6, 1.5.1, 3.4.1, 3.5, 3.8.2, 3.8.3, 3.12, 3.13, 3.15.1, 4.2.6, 4.2.7, 5.2.1, 6.2.1, 7.3.7, 9.3.2, 9.3.3, 9.5.1.3, 9.10.2, 10.2.1.2, 10.2.4, 14.2.1.1, 14.2.1.2
Means, Methods, Techniques, Sequences and Procedures of Construction
3.3.1, 3.12.10, 4.2.2, 4.2.7, 9.4.2
Mechanic's Lien
2.1.2, 15.2.8
Mediation
8.3.1, 10.3.5, 10.3.6, 15.2.1, 15.2.5, 15.2.6, **15.3**, 15.4.1
Minor Changes in the Work
1.1.1, 3.12.8, 4.2.8, 7.1, **7.4**
MISCELLANEOUS PROVISIONS
13
Modifications, Definition of
1.1.1
Modifications to the Contract
1.1.1, 1.1.2, 3.11, 4.1.2, 4.2.1, 5.2.3, 7, 8.3.1, 9.7, 10.3.2, 11.3.1
Mutual Responsibility
6.2
Nonconforming Work, Acceptance of
9.6.6, 9.9.3, **12.3**
Nonconforming Work, Rejection and Correction of
2.3, 2.4, 3.5, 4.2.6, 6.2.4, 9.5.1, 9.8.2, 9.9.3, 9.10.4, 12.2.1
Notice
2.2.1, 2.3, 2.4, 3.2.4, 3.3.1, 3.7.2, 3.12.9, 5.2.1, 9.7, 9.10, 10.2.2, 11.1.3, 12.2.2.1, 13.3, 13.5.1, 13.5.2, 14.1, 14.2, 15.2.8, 15.4.1
Notice, Written
2.3, 2.4, 3.3.1, 3.9.2, 3.12.9, 3.12.10, 5.2.1, 9.7, 9.10, 10.2.2, 10.3, 11.1.3, 11.3.6, 12.2.2.1, **13.3**, 14, 15.2.8, 15.4.1
Notice of Claims
3.7.4, 10.2.8, **15.1.2**, 15.4
Notice of Testing and Inspections
13.5.1, 13.5.2
Observations, Contractor's
3.2, 3.7.4
Occupancy
2.2.2, 9.6.6, 9.8, 11.3.1.5
Orders, Written
1.1.1, 2.3, 3.9.2, 7, 8.2.2, 11.3.9, 12.1, 12.2.2.1, 13.5.2, 14.3.1
OWNER
2
Owner, Definition of
2.1.1
Owner, Information and Services Required of the
2.1.2, **2.2**, 3.2.2, 3.12.10, 6.1.3, 6.1.4, 6.2.5, 9.3.2, 9.6.1, 9.6.4, 9.9.2, 9.10.3, 10.3.3, 11.2, 11.3, 13.5.1, 13.5.2, 14.1.1.4, 14.1.4, 15.1.3
Owner's Authority
1.5, 2.1.1, 2.3, 2.4, 3.4.2, 3.8.1, 3.12.10, 3.14.2, 4.1.2, 4.1.3, 4.2.4, 4.2.9, 5.2.1, 5.2.4, 5.4.1, 6.1, 6.3, 7.2.1, 7.3.1, 8.2.2, 8.3.1, 9.3.1, 9.3.2, 9.5.1, 9.6.4, 9.9.1, 9.10.2, 10.3.2, 11.1.3, 11.3.3, 11.3.10, 12.2.2, 12.3, 13.2.2, 14.3, 14.4, 15.2.7
Owner's Financial Capability
2.2.1, 13.2.2, 14.1.1.4
Owner's Liability Insurance
11.2
Owner's Relationship with Subcontractors
1.1.2, 5.2, 5.3, 5.4, 9.6.4, 9.10.2, 14.2.2
Owner's Right to Carry Out the Work
2.4, 14.2.2
Owner's Right to Clean Up
6.3
Owner's Right to Perform Construction and to Award Separate Contracts
6.1
Owner's Right to Stop the Work
2.3
Owner's Right to Suspend the Work
14.3
Owner's Right to Terminate the Contract
14.2
Ownership and Use of Drawings, Specifications and Other Instruments of Service
1.1.1, 1.1.6, 1.1.7, **1.5**, 2.2.5, 3.2.2, 3.11, 3.17, 4.2.12, 5.3
Partial Occupancy or Use
9.6.6, **9.9**, 11.3.1.5
Patching, Cutting and
3.14, 6.2.5
Patents
3.17
Payment, Applications for
4.2.5, 7.3.9, 9.2, **9.3**, 9.4, 9.5, 9.6.3, 9.7, 9.8.5, 9.10.1, 14.2.3, 14.2.4, 14.4.3
Payment, Certificates for
4.2.5, 4.2.9, 9.3.3, **9.4**, 9.5, 9.6.1, 9.6.6, 9.7, 9.10.1, 9.10.3, 13.7, 14.1.1.3, 14.2.4
Payment, Failure of
9.5.1.3, **9.7**, 9.10.2, 13.6, 14.1.1.3, 14.2.1.2
Payment, Final
4.2.1, 4.2.9, 9.8.2, 9.10, 11.1.2, 11.1.3, 11.4.1, 12.3, 13.7, 14.2.4, 14.4.3
Payment Bond, Performance Bond and
7.3.7.4, 9.6.7, 9.10.3, **11.4**
Payments, Progress
9.3, **9.6**, 9.8.5, 9.10.3, 13.6, 14.2.3, 15.1.3
PAYMENTS AND COMPLETION
9

AIA Document A201™ – 2007. Copyright © 1911, 1915, 1918, 1925, 1937, 1951, 1958, 1961, 1963, 1966, 1970, 1976, 1987, 1997 and 2007 by The American Institute of Architects. **All rights reserved.** WARNING: This AIA® Document is protected by U.S. Copyright Law and International Treaties. Unauthorized reproduction or distribution of this AIA® Document, or any portion of it, may result in severe civil and criminal penalties, and will be prosecuted to the maximum extent possible under the law. This document was produced by AIA software at 14:20:30 on 03/31/2015 under Order No.6386580634_1 which expires on 08/14/2015, and is not for resale.
User Notes: (1865697126)

Payments to Subcontractors
5.4.2, 9.5.1.3, 9.6.2, 9.6.3, 9.6.4, 9.6.7, 14.2.1.2
PCB
10.3.1
Performance Bond and Payment Bond
7.3.7.4, 9.6.7, 9.10.3, **11.4**
Permits, Fees, Notices and Compliance with Laws
2.2.2, **3.7**, 3.13, 7.3.7.4, 10.2.2
PERSONS AND PROPERTY, PROTECTION OF
10
Polychlorinated Biphenyl
10.3.1
Product Data, Definition of
3.12.2
Product Data and Samples, Shop Drawings
3.11, **3.12**, 4.2.7
Progress and Completion
4.2.2, **8.2**, 9.8, 9.9.1, 14.1.4, 15.1.3
Progress Payments
9.3, **9.6**, 9.8.5, 9.10.3, 13.6, 14.2.3, 15.1.3
Project, Definition of
1.1.4
Project Representatives
4.2.10
Property Insurance
10.2.5, **11.3**
PROTECTION OF PERSONS AND PROPERTY
10
Regulations and Laws
1.5, 3.2.3, 3.6, 3.7, 3.12.10, 3.13, 4.1.1, 9.6.4, 9.9.1, 10.2.2, 11.1, 11.4, 13.1, 13.4, 13.5.1, 13.5.2, 13.6, 14, 15.2.8, 15.4
Rejection of Work
3.5, 4.2.6, 12.2.1
Releases and Waivers of Liens
9.10.2
Representations
3.2.1, 3.5, 3.12.6, 6.2.2, 8.2.1, 9.3.3, 9.4.2, 9.5.1, 9.8.2, 9.10.1
Representatives
2.1.1, 3.1.1, 3.9, 4.1.1, 4.2.1, 4.2.2, 4.2.10, 5.1.1, 5.1.2, 13.2.1
Responsibility for Those Performing the Work
3.3.2, 3.18, 4.2.3, 5.3, 6.1.3, 6.2, 6.3, 9.5.1, 10
Retainage
9.3.1, 9.6.2, 9.8.5, 9.9.1, 9.10.2, 9.10.3
Review of Contract Documents and Field Conditions by Contractor
3.2, 3.12.7, 6.1.3
Review of Contractor's Submittals by Owner and Architect
3.10.1, 3.10.2, 3.11, 3.12, 4.2, 5.2, 6.1.3, 9.2, 9.8.2
Review of Shop Drawings, Product Data and Samples by Contractor
3.12
Rights and Remedies
1.1.2, 2.3, 2.4, 3.5, 3.7.4, 3.15.2, 4.2.6, 5.3, 5.4, 6.1, 6.3, 7.3.1, 8.3, 9.5.1, 9.7, 10.2.5, 10.3, 12.2.2, 12.2.4, **13.4**, 14, 15.4
Royalties, Patents and Copyrights
3.17
Rules and Notices for Arbitration
15.4.1
Safety of Persons and Property
10.2, 10.4
Safety Precautions and Programs
3.3.1, 4.2.2, 4.2.7, 5.3, **10.1**, 10.2, 10.4
Samples, Definition of
3.12.3
Samples, Shop Drawings, Product Data and
3.11, **3.12**, 4.2.7
Samples at the Site, Documents and
3.11
Schedule of Values
9.2, 9.3.1
Schedules, Construction
3.10, 3.12.1, 3.12.2, 6.1.3, 15.1.5.2
Separate Contracts and Contractors
1.1.4, 3.12.5, 3.14.2, 4.2.4, 4.2.7, 6, 8.3.1, 12.1.2
Shop Drawings, Definition of
3.12.1
Shop Drawings, Product Data and Samples
3.11, **3.12**, 4.2.7
Site, Use of
3.13, 6.1.1, 6.2.1
Site Inspections
3.2.2, 3.3.3, 3.7.1, 3.7.4, 4.2, 9.4.2, 9.10.1, 13.5
Site Visits, Architect's
3.7.4, 4.2.2, 4.2.9, 9.4.2, 9.5.1, 9.9.2, 9.10.1, 13.5
Special Inspections and Testing
4.2.6, 12.2.1, 13.5
Specifications, Definition of
1.1.6
Specifications
1.1.1, **1.1.6**, 1.2.2, 1.5, 3.11, 3.12.10, 3.17, 4.2.14
Statute of Limitations
13.7, 15.4.1.1
Stopping the Work
2.3, 9.7, 10.3, 14.1
Stored Materials
6.2.1, 9.3.2, 10.2.1.2, 10.2.4
Subcontractor, Definition of
5.1.1
SUBCONTRACTORS
5
Subcontractors, Work by
1.2.2, 3.3.2, 3.12.1, 4.2.3, 5.2.3, 5.3, 5.4, 9.3.1.2, 9.6.7
Subcontractual Relations
5.3, 5.4, 9.3.1.2, 9.6, 9.10, 10.2.1, 14.1, 14.2.1

AIA Document A201™ – 2007. Copyright © 1911, 1915, 1918, 1925, 1937, 1951, 1958, 1961, 1963, 1966, 1970, 1976, 1987, 1997 and 2007 by The American Institute of Architects. **All rights reserved.** WARNING: This AIA® Document is protected by U.S. Copyright Law and International Treaties. Unauthorized reproduction or distribution of this AIA® Document, or any portion of it, may result in severe civil and criminal penalties, and will be prosecuted to the maximum extent possible under the law. This document was produced by AIA software at 14:20:30 on 03/31/2015 under Order No.6386580634_1 which expires on 08/14/2015, and is not for resale.
User Notes: (1865697126)

Submittals
3.10, 3.11, 3.12, 4.2.7, 5.2.1, 5.2.3, 7.3.7, 9.2, 9.3, 9.8, 9.9.1, 9.10.2, 9.10.3, 11.1.3
Submittal Schedule
3.10.2, 3.12.5, 4.2.7
Subrogation, Waivers of
6.1.1, **11.3.7**
Substantial Completion
4.2.9, 8.1.1, 8.1.3, 8.2.3, 9.4.2, **9.8**, 9.9.1, 9.10.3, 12.2, 13.7
Substantial Completion, Definition of
9.8.1
Substitution of Subcontractors
5.2.3, 5.2.4
Substitution of Architect
4.1.3
Substitutions of Materials
3.4.2, 3.5, 7.3.8
Sub-subcontractor, Definition of
5.1.2
Subsurface Conditions
3.7.4
Successors and Assigns
13.2
Superintendent
3.9, 10.2.6
Supervision and Construction Procedures
1.2.2, **3.3**, 3.4, 3.12.10, 4.2.2, 4.2.7, 6.1.3, 6.2.4, 7.1.3, 7.3.7, 8.2, 8.3.1, 9.4.2, 10, 12, 14, 15.1.3
Surety
5.4.1.2, 9.8.5, 9.10.2, 9.10.3, 14.2.2, 15.2.7
Surety, Consent of
9.10.2, 9.10.3
Surveys
2.2.3
Suspension by the Owner for Convenience
14.3
Suspension of the Work
5.4.2, 14.3
Suspension or Termination of the Contract
5.4.1.1, 14
Taxes
3.6, 3.8.2.1, 7.3.7.4
Termination by the Contractor
14.1, 15.1.6
Termination by the Owner for Cause
5.4.1.1, **14.2,** 15.1.6
Termination by the Owner for Convenience
14.4
Termination of the Architect
4.1.3
Termination of the Contractor
14.2.2
TERMINATION OR SUSPENSION OF THE CONTRACT
14
Tests and Inspections
3.1.3, 3.3.3, 4.2.2, 4.2.6, 4.2.9, 9.4.2, 9.8.3, 9.9.2, 9.10.1, 10.3.2, 11.4.1, 12.2.1, **13.5**
TIME
8
Time, Delays and Extensions of
3.2.4, 3.7.4, 5.2.3, 7.2.1, 7.3.1, 7.4, **8.3**, 9.5.1, 9.7, 10.3.2, 10.4, 14.3.2, 15.1.5, 15.2.5
Time Limits
2.1.2, 2.2, 2.4, 3.2.2, 3.10, 3.11, 3.12.5, 3.15.1, 4.2, 5.2, 5.3, 5.4, 6.2.4, 7.3, 7.4, 8.2, 9.2, 9.3.1, 9.3.3, 9.4.1, 9.5, 9.6, 9.7, 9.8, 9.9, 9.10, 11.1.3, 12.2, 13.5, 13.7, 14, 15.1.2, 15.4
Time Limits on Claims
3.7.4, 10.2.8, **13.7**, 15.1.2
Title to Work
9.3.2, 9.3.3
Transmission of Data in Digital Form
1.6
UNCOVERING AND CORRECTION OF WORK
12
Uncovering of Work
12.1
Unforeseen Conditions, Concealed or Unknown
3.7.4, 8.3.1, 10.3
Unit Prices
7.3.3.2, 7.3.4
Use of Documents
1.1.1, 1.5, 2.2.5, 3.12.6, 5.3
Use of Site
3.13, 6.1.1, 6.2.1
Values, Schedule of
9.2, 9.3.1
Waiver of Claims by the Architect
13.4.2
Waiver of Claims by the Contractor
9.10.5, 13.4.2, 15.1.6
Waiver of Claims by the Owner
9.9.3, 9.10.3, 9.10.4, 12.2.2.1, 13.4.2, 14.2.4, 15.1.6
Waiver of Consequential Damages
14.2.4, 15.1.6
Waiver of Liens
9.10.2, 9.10.4
Waivers of Subrogation
6.1.1, **11.3.7**
Warranty
3.5, 4.2.9, 9.3.3, 9.8.4, 9.9.1, 9.10.4, 12.2.2, 13.7
Weather Delays
15.1.5.2
Work, Definition of
1.1.3
Written Consent
1.5.2, 3.4.2, 3.7.4, 3.12.8, 3.14.2, 4.1.2, 9.3.2, 9.8.5, 9.9.1, 9.10.2, 9.10.3, 11.4.1, 13.2, 13.4.2, 15.4.4.2
Written Interpretations
4.2.11, 4.2.12

AIA Document A201™ – 2007. Copyright © 1911, 1915, 1918, 1925, 1937, 1951, 1958, 1961, 1963, 1966, 1970, 1976, 1987, 1997 and 2007 by The American Institute of Architects. **All rights reserved.** WARNING: This AIA® Document is protected by U.S. Copyright Law and International Treaties. Unauthorized reproduction or distribution of this AIA® Document, or any portion of it, may result in severe civil and criminal penalties, and will be prosecuted to the maximum extent possible under the law. This document was produced by AIA software at 14:20:30 on 03/31/2015 under Order No.6386580634_1 which expires on 08/14/2015, and is not for resale.
User Notes:

Written Notice
2.3, 2.4, 3.3.1, 3.9, 3.12.9, 3.12.10, 5.2.1, 8.2.2, 9.7, 9.10, 10.2.2, 10.3, 11.1.3, 12.2.2, 12.2.4, **13.3**, 14, 15.4.1

Written Orders
1.1.1, 2.3, 3.9, 7, 8.2.2, 12.1, 12.2, 13.5.2, 14.3.1, 15.1.2

AIA Document A201™ – 2007. Copyright © 1911, 1915, 1918, 1925, 1937, 1951, 1958, 1961, 1963, 1966, 1970, 1976, 1987, 1997 and 2007 by The American Institute of Architects. **All rights reserved.** WARNING: This AIA® Document is protected by U.S. Copyright Law and International Treaties. Unauthorized reproduction or distribution of this AIA® Document, or any portion of it, may result in severe civil and criminal penalties, and will be prosecuted to the maximum extent possible under the law. This document was produced by AIA software at 14:20:30 on 03/31/2015 under Order No.6386580634_1 which expires on 08/14/2015, and is not for resale.
User Notes: (1865697126)

ARTICLE 1 GENERAL PROVISIONS

§ 1.1 BASIC DEFINITIONS

§ 1.1.1 THE CONTRACT DOCUMENTS

The Contract Documents are enumerated in the Agreement between the Owner and Contractor (hereinafter the Agreement) and consist of the Agreement, Conditions of the Contract (General, Supplementary and other Conditions), Drawings, Specifications, Addenda issued prior to execution of the Contract, other documents listed in the Agreement and Modifications issued after execution of the Contract. A Modification is (1) a written amendment to the Contract signed by both parties, (2) a Change Order, (3) a Construction Change Directive or (4) a written order for a minor change in the Work issued by the Architect. Unless specifically enumerated in the Agreement, the Contract Documents do not include the advertisement or invitation to bid, Instructions to Bidders, sample forms, other information furnished by the Owner in anticipation of receiving bids or proposals, the Contractor's bid or proposal, or portions of Addenda relating to bidding requirements.

§ 1.1.2 THE CONTRACT

The Contract Documents form the Contract for Construction. The Contract represents the entire and integrated agreement between the parties hereto and supersedes prior negotiations, representations or agreements, either written or oral. The Contract may be amended or modified only by a Modification. The Contract Documents shall not be construed to create a contractual relationship of any kind (1) between the Contractor and the Architect or the Architect's consultants, (2) between the Owner and a Subcontractor or a Sub-subcontractor, (3) between the Owner and the Architect or the Architect's consultants or (4) between any persons or entities other than the Owner and the Contractor. The Architect shall, however, be entitled to performance and enforcement of obligations under the Contract intended to facilitate performance of the Architect's duties.

§ 1.1.3 THE WORK

The term "Work" means the construction and services required by the Contract Documents, whether completed or partially completed, and includes all other labor, materials, equipment and services provided or to be provided by the Contractor to fulfill the Contractor's obligations. The Work may constitute the whole or a part of the Project.

§ 1.1.4 THE PROJECT

The Project is the total construction of which the Work performed under the Contract Documents may be the whole or a part and which may include construction by the Owner and by separate contractors.

§ 1.1.5 THE DRAWINGS

The Drawings are the graphic and pictorial portions of the Contract Documents showing the design, location and dimensions of the Work, generally including plans, elevations, sections, details, schedules and diagrams.

§ 1.1.6 THE SPECIFICATIONS

The Specifications are that portion of the Contract Documents consisting of the written requirements for materials, equipment, systems, standards and workmanship for the Work, and performance of related services.

§ 1.1.7 INSTRUMENTS OF SERVICE

Instruments of Service are representations, in any medium of expression now known or later developed, of the tangible and intangible creative work performed by the Architect and the Architect's consultants under their respective professional services agreements. Instruments of Service may include, without limitation, studies, surveys, models, sketches, drawings, specifications, and other similar materials.

§ 1.1.8 INITIAL DECISION MAKER

The Initial Decision Maker is the person identified in the Agreement to render initial decisions on Claims in accordance with Section 15.2 and certify termination of the Agreement under Section 14.2.2.

§ 1.2 CORRELATION AND INTENT OF THE CONTRACT DOCUMENTS

§ 1.2.1 The intent of the Contract Documents is to include all items necessary for the proper execution and completion of the Work by the Contractor. The Contract Documents are complementary, and what is required by one shall be as binding as if required by all; performance by the Contractor shall be required only to the extent consistent with the Contract Documents and reasonably inferable from them ~~as being necessary to produce the indicated results.~~ or from prevailing custom or trade usage as being required to produce the intended result whether or not specifically called for at no additional cost to the Owner.

Init.

/

AIA Document A201™ – 2007. Copyright © 1911, 1915, 1918, 1925, 1937, 1951, 1958, 1961, 1963, 1966, 1970, 1976, 1987, 1997 and 2007 by The American Institute of Architects. All rights reserved. WARNING: This AIA® Document is protected by U.S. Copyright Law and International Treaties. Unauthorized reproduction or distribution of this AIA® Document, or any portion of it, may result in severe civil and criminal penalties, and will be prosecuted to the maximum extent possible under the law. This document was produced by AIA software at 14:20:30 on 03/31/2015 under Order No.6386580634_1 which expires on 08/14/2015, and is not for resale.
User Notes: (1865697126)

§ 1.2.1.1 Should any conflict be found in the Contract Documents, the Architect/Engineer shall interpret or construe the Contract Documents so as to secure the most substantial and complete performance of the Work. In other words, the better quality or great quantity of work shall be provided in accordance with the Architect/Engineer's interpretation. The Architect/Engineer's decision in this matter shall be final.

§ 1.2.2 Organization of the Specifications into divisions, sections and articles, and arrangement of Drawings shall not control the Contractor in dividing the Work among Subcontractors or in establishing the extent of Work to be performed by any trade.

§ 1.2.3 Unless otherwise stated in the Contract Documents, words that have well-known technical or construction industry meanings are used in the Contract Documents in accordance with such recognized meanings.

§ 1.2.4 Wherever in the Contract Documents the words "as approved", "as directed", "as required", "acceptable", "satisfactory" and words of like import are used with references to the Work or its performance, and without further qualification, it shall mean as approved, as directed, as required by the Architect/Engineer and acceptable, satisfactory, etc. to the Architect/Engineer.

§ 1.2.5 The general character of the detailed work is shown on the Drawings, but minor modifications may be made on the shop drawings or mock-ups. Any details shall be worked out in relation to their location and their connection to other parts of the Work. Where on any drawings a portion of the Work is drawn out and the remainder is indicated in outline, the parts drawn out also apply to all other like portions of the Work. Where details or conditions are indicated but started only, such details or conditions shall be continued throughout the courses or parts in which they occur and shall also apply to all other similar parts in the Work unless otherwise indicated or specifically noted.

§ 1.3 CAPITALIZATION

Terms capitalized in these General Conditions include those that are (1) specifically defined, (2) the titles of numbered articles or (3) the titles of other documents published by the American Institute of Architects.

§ 1.4 INTERPRETATION

In the interest of brevity the Contract Documents frequently omit modifying words such as "all" and "any" and articles such as "the" and "an," but the fact that a modifier or an article is absent from one statement and appears in another is not intended to affect the interpretation of either statement.

Wherever the term "Architect" appears in this Agreement, it shall mean either Architect or Engineer.

§ 1.5 OWNERSHIP AND USE OF DRAWINGS, SPECIFICATIONS AND OTHER INSTRUMENTS OF SERVICE

§ 1.5.1 The drawings, specifications and other documents, including those in electronic form, prepared by the Architect and the Architect's consultants are Instruments of Service through which the Work to be executed by the Contractor is described. The Contractor may retain one record set. Neither the Contractor nor any Subcontractor, Sub-subcontractor or material or equipment supplier shall own or claim a copyright in the drawings, specifications and other documents prepared by the Architect or the Architect's consultants, and unless otherwise indicated the Architect and the Architect's consultants shall be deemed the authors and owners of ~~their respective Instruments of Service, including the Drawings and Specifications,~~ them, and will retain all common law, statutory and other reserved rights, ~~including copyrights. The Contractor,~~ in addition to the copyrights. All copies of Instruments of Service, except the Contractor's record set, shall be returned or suitably accounted for to the Architect, on request, upon completion of the Work. The drawings, specifications and other documents prepared by the Architect and the Architect's consultants, and copies thereof furnished to the Contractor, are for use solely with respect to this Project. As such, the City is hereby declared sole-owner of these documents in regards to this Project and will abide by the limitations described in Subparagraph 1.5.1. They are not to be used by the Contractor or any Subcontractor, Sub-subcontractor or material or equipment supplier on other projects or for additions to this Project outside the scope of the Work without the specific written consent of the Owner, Architect and the Architect's consultants. The Contractor, Subcontractors, Sub-subcontractors, and material or equipment suppliers ~~shall not own or claim a copyright in the Instruments of Service.~~ are authorized to use and reproduce applicable portions of the drawings, specifications and other documents prepared by the Architect and the Architect's consultants appropriate to and for use in the execution of their Work under the Contract Documents. All copies made under this authorization shall bear the statutory copyright notice, if any, shown on the drawings, specifications and other documents prepared by

AIA Document A201™ – 2007. Copyright © 1911, 1915, 1918, 1925, 1937, 1951, 1958, 1961, 1963, 1966, 1970, 1976, 1987, 1997 and 2007 by The American Institute of Architects. All rights reserved. WARNING: This AIA® Document is protected by U.S. Copyright Law and International Treaties. Unauthorized reproduction or distribution of this AIA® Document, or any portion of it, may result in severe civil and criminal penalties, and will be prosecuted to the maximum extent possible under the law. This document was produced by AIA software at 14:20:30 on 03/31/2015 under Order No.6386580634_1 which expires on 08/14/2015, and is not for resale.
User Notes: (1865697126)

the Architect and the Architect's consultants.. Submittal or distribution to meet official regulatory requirements or for other purposes in connection with this Project is not to be construed as publication in derogation of the Architect's or Architect's consultants' reserved rights.

~~§ 1.5.2 The Contractor, Subcontractors, Sub-subcontractors and material or equipment suppliers are authorized to use and reproduce the Instruments of Service provided to them solely and exclusively for execution of the Work. All copies made under this authorization shall bear the copyright notice, if any, shown on the Instruments of Service. The Contractor, Subcontractors, Sub-subcontractors, and material or equipment suppliers may not use the Instruments of Service on other projects or for additions to this Project outside the scope of the Work without the specific written consent of the Owner, Architect and the Architect's consultants.~~

§ 1.5.2. Intentionally Omitted.

§ 1.6 TRANSMISSION OF DATA IN DIGITAL FORM

If the parties intend to transmit Instruments of Service or any other information or documentation in digital form, they shall endeavor to establish necessary protocols governing such transmissions, unless otherwise already provided in the Agreement or the Contract Documents.

ARTICLE 2 OWNER

§ 2.1 GENERAL

§ 2.1.1 The Owner is the person or entity identified as such in the Agreement and is referred to throughout the Contract Documents as if singular in number. The Owner shall designate in writing a representative who shall have express authority to bind the Owner with respect to all matters requiring the Owner's approval or authorization. Except as otherwise provided in Section 4.2.1, the Architect does not have such authority. The term "Owner" means the Owner or the Owner's authorized representative.

§ 2.1.2 The Owner shall furnish to the Contractor within fifteen days after receipt of a written request, information necessary and relevant for the Contractor to evaluate, give notice of or enforce mechanic's lien rights. Such information shall include a correct statement of the record legal title to the property on which the Project is located, usually referred to as the site, and the Owner's interest therein.

§ 2.2 INFORMATION AND SERVICES REQUIRED OF THE OWNER

~~§ 2.2.1 Prior to commencement of the Work, the Contractor may request in writing that the Owner provide reasonable evidence that the Owner has made financial arrangements to fulfill the Owner's obligations under the Contract. Thereafter, the Contractor may only request such evidence if (1) the Owner fails to make payments to the Contractor as the Contract Documents require; (2) a change in the Work materially changes the Contract Sum; or (3) the Contractor identifies in writing a reasonable concern regarding the Owner's ability to make payment when due. The Owner shall furnish such evidence as a condition precedent to commencement or continuation of the Work or the portion of the Work affected by a material change. After the Owner furnishes the evidence, the Owner shall not materially vary such financial arrangements without prior notice to the Contractor.~~

§ 2.2.1. Intentionally Omitted.

§ 2.2.2 Except for permits and fees that are the responsibility of the Contractor under the Contract Documents, including those required under Section 3.7.1, the Owner shall secure and pay for necessary approvals, easements, assessments and charges required for construction, use or occupancy of permanent structures or for permanent changes in existing facilities. Unless otherwise specified, the following applies:

a. Water line taps, construction of pits for water taps and meter, and restoration of the area to its original condition shall be performed by the Contractor at its expense. Only new water meters shall be installed by City forces at the expense of project sponsor (i.e. the City or private developer). All the aforementioned shall be coordinated by the Contractor.

b. Sanitary taps and cleanouts shall be done by the Contractor or its Subcontractor at the Contractor's expense. HRSD tap fees will be paid by the Owner.

AIA Document A201™ – 2007. Copyright © 1911, 1915, 1918, 1925, 1937, 1951, 1958, 1961, 1963, 1966, 1970, 1976, 1987, 1997 and 2007 by The American Institute of Architects. All rights reserved. WARNING: This AIA® Document is protected by U.S. Copyright Law and International Treaties. Unauthorized reproduction or distribution of this AIA® Document, or any portion of it, may result in severe civil and criminal penalties, and will be prosecuted to the maximum extent possible under the law. This document was produced by AIA software at 14:20:30 on 03/31/2015 under Order No.6386580634_1 which expires on 08/14/2015, and is not for resale.
User Notes: (1865697126)

c. For gas and electrical work and associated meter installations, the Contractor shall be responsible for complete coordination of work with utilities, including provision of all necessary labor, equipment, and materials as required in the Contract Documents as well as payment of all resulting costs to aforesaid Work.

d. For telephone and cables, the Contractor shall be responsible for coordination of telephone trunk lines and cable installation with telephone/television company to the "point of penetration" to the facility, including provision of all necessary labor, equipment, and materials as required in the Contract Documents as well as payment of resulting costs to all aforesaid work.

§ 2.2.3 The Owner shall furnish surveys describing physical characteristics, legal limitations and utility locations for the site of the Project, and a legal description of the site. The Contractor shall be entitled to rely on the accuracy of information furnished by the ~~Owner~~ Owner, subject to Subparagraph 3.74, but shall exercise proper precautions relating to the safe performance of the Work.

§ 2.2.3.1 The Contractor shall be responsible for protecting pins, stakes, marks, hubs, and control points. Replacement of damaged or destroyed pins, stakes, marks, hubs or control points shall be conducted under the supervision of a surveyor licensed in the Commonwealth of Virginia, if required by the City, and at the Contractor's expense. The Contractor shall coordinate with the Survey Division of the Department of Public Works (664-4645) prior to resetting of points and shall provide certified documentation to include the reference/recovery sheet with swing ties for new benchmarks.

§ 2.2.4 The Owner shall furnish information or services required of the Owner by the Contract Documents with reasonable promptness. The Owner shall also furnish any other information or services under the Owner's control and relevant to the Contractor's performance of the Work with reasonable promptness after receiving the Contractor's written request for such information or services.

§ 2.2.5 Unless otherwise provided in the Contract Documents, the Owner shall furnish to the Contractor one ~~copy of the Contract Documents for purposes of making reproductions pursuant to Section 1.5.2.~~(1) CD containing the drawings, specifications, and addendums, in PDF format, free of charge..

§ 2.3 OWNER'S RIGHT TO STOP THE WORK

If the Contractor fails to correct Work that is not in accordance with the requirements of the Contract Documents as required by Section 12.2 or repeatedly fails to carry out Work in accordance with the Contract Documents, the Owner may issue a written order to the Contractor to stop the Work, or any portion thereof, until the cause for such order has been eliminated; however, the right of the Owner to stop the Work shall not give rise to a duty on the part of the Owner to exercise this right for the benefit of the Contractor or any other person or entity, except to the extent required by Section 6.1.3.

§ 2.4 OWNER'S RIGHT TO CARRY OUT THE WORK

If the Contractor defaults or neglects to carry out the Work in accordance with the Contract Documents and fails within a ten-day period after receipt of written notice from the Owner to commence and continue correction of such default or neglect with diligence and promptness, the Owner may, without prejudice to other remedies the Owner may have, correct such deficiencies. In such case an appropriate Change Order shall be issued deducting from payments then or thereafter due the Contractor the reasonable cost of correcting such deficiencies, including Owner's expenses and compensation for the Architect's additional services made necessary by such default, neglect or ~~failure. Such action by the Owner and amounts charged to the Contractor are both subject to prior approval of the Architect.~~ failure.. If payments then or thereafter due the Contractor are not sufficient to cover such amounts, the Contractor shall pay the difference to the Owner.

ARTICLE 3 CONTRACTOR

§ 3.1 GENERAL

§ 3.1.1 The Contractor is the person or entity identified as such in the Agreement and is referred to throughout the Contract Documents as if singular in number. The Contractor shall be lawfully licensed, if required in the jurisdiction where the Project is located. The Contractor shall designate in writing a representative who shall have express authority to bind the Contractor with respect to all matters under this Contract. The term "Contractor" means the Contractor or the Contractor's authorized representative.

AIA Document A201™ – 2007. Copyright © 1911, 1915, 1918, 1925, 1937, 1951, 1958, 1961, 1963, 1966, 1970, 1976, 1987, 1997 and 2007 by The American Institute of Architects. All rights reserved. WARNING: This AIA® Document is protected by U.S. Copyright Law and International Treaties. Unauthorized reproduction or distribution of this AIA® Document, or any portion of it, may result in severe civil and criminal penalties, and will be prosecuted to the maximum extent possible under the law. This document was produced by AIA software at 14:20:30 on 03/31/2015 under Order No.6386580634_1 which expires on 08/14/2015, and is not for resale.
User Notes:

(1865697126)

§ **3.1.2** The Contractor shall perform the Work in accordance with the Contract Documents.

§ **3.1.3** The Contractor shall not be relieved of obligations to perform the Work in accordance with the Contract Documents either by activities or duties of the Architect in the Architect's administration of the Contract, or by tests, inspections or approvals required or performed by persons or entities other than the Contractor.

§ 3.2 REVIEW OF CONTRACT DOCUMENTS AND FIELD CONDITIONS BY CONTRACTOR

§ **3.2.1** Execution of the Contract by the Contractor is a representation that the Contractor has visited the site, become generally familiar with local conditions under which the Work is to be performed and correlated personal observations with requirements of the Contract Documents.

§ **3.2.2** Because the Contract Documents are complementary, the Contractor shall, before starting each portion of the Work, carefully study and compare the various Contract Documents relative to that portion of the Work, as well as the information furnished by the Owner pursuant to Section 2.2.3, shall take field measurements of any existing conditions related to that portion of the Work, and shall observe any conditions at the site affecting it. These obligations are for the purpose of facilitating coordination and construction by the Contractor and are not for the purpose of discovering errors, omissions, or inconsistencies in the Contract Documents; however, the Contractor shall promptly report to the Architect any errors, inconsistencies or omissions discovered by or made known to the Contractor as a request for information in such form as the Architect may require. It is recognized that the Contractor's review is made in the Contractor's capacity as a contractor and not as a licensed design professional, unless otherwise specifically provided in the Contract Documents. Any failure by the Contractor to acquaint himself with such information shall not relieve him from the responsibility for successfully performing the Work.

.1 Dimension so f Work shall not be determined by scale or rule, but figured dimensions shall be used at all times.

.2 The Contractor shall verify all dimensions by measurement at the jobsite, and shall take any and all other measurements necessary to verify the drawings and to properly layout the Work.

.3 The study of the Contract Documents by the Contractor shall be made sufficiently in advance of the actual layout of the work so as to allow the Contract Documents to be interpreted or modified by the Architect.

§ **3.2.3** The Contractor is not required to ascertain that the Contract Documents are in accordance with applicable laws, statutes, ordinances, codes, rules and regulations, or lawful orders of public authorities, but the Contractor shall promptly report to the Architect any nonconformity discovered by or made known to the Contractor as a request for information in such form as the Architect may require.

§ **3.2.4** If the Contractor believes that additional cost or time is involved because of clarifications or instructions issued by the Architect ~~issues~~ in response to the Contractor's notices or requests for information pursuant to Sections 3.2.2 or 3.2.3, the Contractor shall make Claims as provided in Article 15. If the Contractor fails to perform the obligations of Sections 3.2.2 or 3.2.3, the Contractor shall pay such costs and damages to the Owner as would have been avoided if the Contractor had performed such obligations. ~~If the Contractor performs those obligations, the Contractor~~ The Contractor shall not be liable to the Owner or Architect for damages resulting from errors, inconsistencies or omissions in the Contract Documents, or for differences between field measurements or conditions and the Contract ~~Documents, or for nonconformities of the Contract Documents to applicable laws, statutes, ordinances, codes, rules and regulations, and lawful orders of public authorities.~~Documents unless the Contractor recognized such error, inconsistency, omission or difference and knowingly failed to report it to the Architect..

§ 3.3 SUPERVISION AND CONSTRUCTION PROCEDURES

§ **3.3.1** The Contractor shall supervise and direct the Work, using the Contractor's best skill and attention. The Contractor shall be solely responsible for, and have control over, construction means, methods, techniques, sequences and procedures and for coordinating all portions of the Work under the Contract, unless the Contract Documents give other specific instructions concerning these matters. If the Contract Documents give specific instructions concerning construction means, methods, techniques, sequences or procedures, the Contractor shall evaluate the jobsite safety thereof and, except as stated below, shall be fully and solely responsible for the jobsite safety of such means, methods, techniques, sequences or procedures. If the Contractor determines that such means,

Init.
/
AIA Document A201™ – 2007. Copyright © 1911, 1915, 1918, 1925, 1937, 1951, 1958, 1961, 1963, 1966, 1970, 1976, 1987, 1997 and 2007 by The American Institute of Architects. All rights reserved. WARNING: This AIA® Document is protected by U.S. Copyright Law and International Treaties. Unauthorized reproduction or distribution of this AIA® Document, or any portion of it, may result in severe civil and criminal penalties, and will be prosecuted to the maximum extent possible under the law. This document was produced by AIA software at 14:20:30 on 03/31/2015 under Order No.6386580634_1 which expires on 08/14/2015, and is not for resale.
User Notes: (1865697126)

methods, techniques, sequences or procedures may not be safe, the Contractor shall give timely written notice to the Owner and Architect and shall not proceed with that portion of the Work without further written instructions from the Architect. If the Contractor is then instructed to proceed with the required means, methods, techniques, sequences or procedures without acceptance of changes proposed by the Contractor, the Owner shall be solely responsible for any loss or damage arising solely from those Owner-required means, methods, techniques, sequences or procedures.

§ 3.3.2 The Contractor shall be responsible to the Owner for acts and omissions of the Contractor's employees, Subcontractors and their agents and employees, and other persons or entities performing portions of the Work for, or on behalf of, the Contractor or any of its Subcontractors.

§ 3.3.3 The Contractor shall be responsible for inspection of portions of Work already performed to determine that such portions are in proper condition to receive subsequent Work.

§ 3.4 LABOR AND MATERIALS

§ 3.4.1 Unless otherwise provided in the Contract Documents, the Contractor shall provide and pay for labor, materials, equipment, tools, construction equipment and machinery, water, heat, utilities, transportation, and other facilities and services necessary for proper execution and completion of the Work, whether temporary or permanent and whether or not incorporated or to be incorporated in the Work.

§ 3.4.2 Except in the case of minor changes in the Work authorized by the Architect in accordance with Sections 3.12.8 or 7.4, the Contractor may make substitutions only with the consent of the Owner, after evaluation by the Architect and in accordance with a Change Order or Construction Change Directive.

a. **Substituted Materials.** Request for approval of any substituted material and equipment for those specified or shown on the drawings shall be made in writing to the Engineer within 30 days after award of the Contract. If this request is not submitted, the Engineer reserves the right to have the Contractor furnish the material and equipment definitely specified or shown on the plans. The Contractor shall show, in writing, the monetary savings, improvement in quality, time savings, and other factors to be gained from the proposed substitute. Approval of substitute materials and equipment will be at the sole discretion of the Engineer.

b. **Or Equal.** It is not the intent of these specifications to exclude or omit products or any responsible manufacturer, if said products are equal in every respect to those mentioned herein. Whenever an article, or any class of materials is specified by trade name or byname of any particular patentee, manufacturer or dealer, it shall be taken as intending to mean equal thereto in quality, finish, size, durability and equally as serviceable for the purpose for which it is or they intended. Request for approval of any "equal" material or product for those specified or shown on the drawings shall be made in writing to the Engineer within 30 days after award of the Contract. If this request is not submitted, the Engineer reserves the right to have the Contractor furnish the material and products definitely specified and shown on the plans. The Contractor shall show, in writing, that the material or product being proposed is equal in every respect to that specified and shall provide all necessary supporting documentation requested by the Engineer. The quality shall be determined by the Engineer, and he alone shall be sole judge as to what materials or services will be accepted as equal. No substitution of materials, methods or services specified shall be made without written approval from the Engineer.

c. **Materials and Equipment Manufacturer's Recommendation.** All materials, equipment or other items specified by trade or manufacturer's name shall be handled, installed, erected or connected in strict conformity with the manufacturer's recommendations and/or specifications. By making requests for substitutions, the Contractor:

1. Represents that the Contractor has personally investigated the proposed substitute product and determined that it is equal or superior in all respects to that specified;

2. Represents that the Contractor will provide the same warranty for the substitution that the Contractor would for that specified;

3. Certifies that the cost data presented is complete and includes all related costs under this Contract except the Architect's redesign costs, and waives all claims for additional costs and time extensions related to the substitution which may subsequently become apparent; and

Init.

/

AIA Document A201™ – 2007. Copyright © 1911, 1915, 1918, 1925, 1937, 1951, 1958, 1961, 1963, 1966, 1970, 1976, 1987, 1997 and 2007 by The American Institute of Architects. **All rights reserved.** WARNING: This AIA® Document is protected by U.S. Copyright Law and International Treaties. Unauthorized reproduction or distribution of this AIA® Document, or any portion of it, may result in severe civil and criminal penalties, and will be prosecuted to the maximum extent possible under the law. This document was produced by AIA software at 14:20:30 on 03/31/2015 under Order No.6386580634_1 which expires on 08/14/2015, and is not for resale.
User Notes: (1865697126)

4. Will coordinate the installation of the accepted substitute, making such changes as may be required for the Work to be complete in all respects.

§ 3.4.3 The Contractor shall enforce strict discipline and good order among the Contractor's employees and other persons carrying out the Work. The Contractor shall not permit employment of unfit persons or persons not properly skilled in tasks assigned to them.

§ 3.5 WARRANTY

The Contractor warrants to the Owner and Architect that materials and equipment furnished under the Contract will be of good quality and new unless the Contract Documents require or permit otherwise. The Contractor further warrants that the Work will conform to the requirements of the Contract Documents and will be free from defects, except for those inherent in the quality of the Work the Contract Documents require or permit. Work, materials, or equipment not conforming to these requirements may be considered defective. The Contractor's warranty excludes remedy for damage or defect caused by abuse, alterations to the Work not executed by the Contractor, improper or insufficient maintenance, improper operation, or normal wear and tear and normal usage. If required by the Architect, the Contractor shall furnish satisfactory evidence as to the kind and quality of materials and equipment.

§ 3.6 TAXES

The Contractor shall pay sales, consumer, use and similar taxes for the Work provided by the Contractor that are legally enacted when bids are received or negotiations concluded, whether or not yet effective or merely scheduled to go into effect.

§ 3.7 PERMITS, FEES, NOTICES AND COMPLIANCE WITH LAWS

§ 3.7.1 Unless otherwise provided in the Contract Documents, the Contractor shall secure and pay for the building permit as well as for other permits, fees, licenses, and inspections by government agencies necessary for proper execution and completion of the Work that are customarily secured after execution of the Contract and legally required at the time bids are received or negotiations concluded. The Contractor shall be advised that there is NO permit fee for new construction, additions, etc. for CITY-OWNED BUILDINGS. Before final payment is made on the Project, Contractor shall demonstrate that the necessary inspections, certificates of occupancy, clearance, and/or acceptance from the City, State, Federal, and/or private entities/organizations such as from the City's Building Official, Corps of Engineers, Department of Environmental Quality, etc. have been obtained.

§ 3.7.2 The Contractor shall comply with and give notices required by applicable laws, statutes, ordinances, codes, rules and regulations, and lawful orders of public authorities applicable to performance of the Work.

§ 3.7.3 If the Contractor performs Work knowing it to be contrary to applicable laws, statutes, ordinances, codes, rules and regulations, or lawful orders of public authorities, the Contractor shall assume appropriate responsibility for such Work and shall bear the costs attributable to correction.

§ 3.7.4 Concealed or Unknown Conditions. If the Contractor encounters conditions at the site that are (1) subsurface or otherwise concealed physical conditions that differ materially from those indicated in the Contract Documents or (2) unknown physical conditions of an unusual nature, that differ materially from those ordinarily found to exist and generally recognized as inherent in construction activities of the character provided for in the Contract Documents, the Contractor shall promptly provide notice to the Owner and the Architect before conditions are ~~disturbed and in no event later than 21 days after first observance of the conditions.~~ disturbed, Contractor shall not disturb such condition or perform any Work in connection therewith (except as aforesaid) until receipt of written order to do so "except in an emergency as required by Paragraph 10.4.. The Architect will promptly investigate such conditions and, if the Architect determines that they differ materially and cause an increase or decrease in the Contractor's cost of, or time required for, performance of any part of the Work, will recommend an equitable adjustment in the Contract Sum or Contract Time, or both. If the Architect determines that the conditions at the site are not materially different from those indicated in the Contract Documents and that no change in the terms of the Contract is justified, the Architect shall promptly notify the Owner and Contractor in writing, stating the reasons. With respect to unforeseen Work that is paid on a Unit Price Basis, any adjustment in quantity and Contract price will be determined by the Architect/Engineer subject to the provisions of Subparagraph 15.1.5.3. Architect/Engineer will review with the Contractor the Architect/Engineer's preliminary determinations on such matters before rendering a written decision thereon (by recommendation of an Application for Payment or

Init.
/
AIA Document A201™ – 2007. Copyright © 1911, 1915, 1918, 1925, 1937, 1951, 1958, 1961, 1963, 1966, 1970, 1976, 1987, 1997 and 2007 by The American Institute of Architects. All rights reserved. WARNING: This AIA® Document is protected by U.S. Copyright Law and International Treaties. Unauthorized reproduction or distribution of this AIA® Document, or any portion of it, may result in severe civil and criminal penalties, and will be prosecuted to the maximum extent possible under the law. This document was produced by AIA software at 14:20:30 on 03/31/2015 under Order No.6386580634_1 which expires on 08/14/2015, and is not for resale.
User Notes: (1865697126)

otherwise). If either party disputes the Architect's determination or recommendation, that party may proceed as provided in Article 15.

§ 3.7.4.1 Possible Price and Times Adjustments. Contractor shall not be entitled to any adjustment in the Contract Price or Contract Terms if:

a. Contractor knew of the existence of such conditions at the time Contractor made a final commitment to Owner in respect to Contract price and Contract times by the submission of a Bid or becoming bound under a negotiated contract; or

b. The existence of such condition could reasonably have been discovered or revealed as a result of examination, investigation, exploration, test, or stud of the Site and contiguous areas required by the bidding requirements or Contract Documents to be conducted by or for Contractor prior to Contractor's making such final commitment; or

c. Contractor failed to give written notice within the time and as required by Subparagraph 3.7.4.

§ 3.7.4.2 Subsurface and Physical Conditions. The Contract Documents identify:

a. Those reports of explorations and tests of subsurface conditions at or contiguous to the Site that the Architect/Engineer has used in preparing the Contract Documents.

b. Those drawings of physical conditions in or relating to existing surface or subsurface structures at or contiguous to the Site that the Architect/Engineer has used in preparing the Contract Documents.

§ 3.7.4.3 Limited Reliance by Contractor on Technical Data Authorized. Contractor may rely upon the accuracy of the "technical data" contained in such reports and drawings, but such reports and drawings are not Contract Documents. Such "technical data", if any, shall be identified in Supplementary General Conditions. Contractor may not rely upon or make any claim against Owner, Architect/Engineer, or any of the Architect/Engineer's consultants with respect to:

a. The completeness of such reports and drawings for Contractor's purposes, including, but not limited to, any aspects of the means, methods, techniques, sequences, and procedures of construction to be employed by the Contractor, and safety precautions and programs incident thereto; or

b. Any Contractor interpretation of or conclusion drawing from any "technical data" or any such data, interpretations, opinions, or information.

§ 3.7.5 If, in the course of the Work, the Contractor encounters human remains or recognizes the existence of burial markers, archaeological sites or wetlands not indicated in the Contract Documents, the Contractor shall immediately suspend any operations that would affect them and shall notify the Owner and Architect. Upon receipt of such notice, the Owner shall promptly take any action necessary to obtain governmental authorization required to resume the operations. The Contractor shall continue to suspend such operations until otherwise instructed by the Owner but shall continue with all other operations that do not affect those remains or features. Requests for adjustments in the Contract Sum and Contract Time arising from the existence of such remains or features may be made as provided in Article 15.

§ 3.8 ALLOWANCES

§ 3.8.1 The Contractor shall include in the Contract Sum all allowances stated in the Contract Documents. Items covered by allowances shall be supplied for such amounts and by such persons or entities as the Owner may direct, but the Contractor shall not be required to employ persons or entities to whom the Contractor has reasonable objection.

§ 3.8.2 Unless otherwise provided in the Contract Documents,

.1 Allowances shall cover the cost to the Contractor of materials and equipment delivered at the site and all required taxes, less applicable trade discounts;

AIA Document A201™ – 2007. Copyright © 1911, 1915, 1918, 1925, 1937, 1951, 1958, 1961, 1963, 1966, 1970, 1976, 1987, 1997 and 2007 by The American Institute of Architects. **All rights reserved.** WARNING: This AIA® Document is protected by U.S. Copyright Law and International Treaties. Unauthorized reproduction or distribution of this AIA® Document, or any portion of it, may result in severe civil and criminal penalties, and will be prosecuted to the maximum extent possible under the law. This document was produced by AIA software at 14:20:30 on 03/31/2015 under Order No.6386580634_1 which expires on 08/14/2015, and is not for resale.
User Notes: (1865697126)

.2 Contractor's costs for unloading and handling at the site, labor, installation costs, overhead, profit and other expenses contemplated for stated allowance amounts shall be included in the Contract Sum but not in the allowances; and

.3 Whenever costs are more than or less than allowances, the Contract Sum shall be adjusted accordingly by Change Order. The amount of the Change Order shall reflect (1) the difference between actual costs and the allowances under Section 3.8.2.1 and (2) changes in Contractor's costs under Section 3.8.2.2. The Contractor shall attach with monthly invoices the original copy of sales invoices/receipts for materials or equipment that are covered under allowances.

§ 3.8.3 Materials and equipment under an allowance shall be selected by the Owner ~~with reasonable promptness.~~in sufficient time to avoid delay in the Work..

§ 3.9 SUPERINTENDENT

§ 3.9.1 The Contractor shall employ a competent superintendent and necessary assistants who shall be in attendance at the Project site during performance of the Work. The superintendent shall represent the Contractor, and communications given to the superintendent shall be as binding as if given to the Contractor. Important communications shall be confirmed in writing. Other communications shall be similarly confirmed on written request in each case.

1. The superintendent shall not be changed except with the consent of the Owner, unless the superintendent ceases to be in the Contractor's employ.

§ 3.9.2 The Contractor, as soon as practicable after award of the Contract, and prior to mobilization or proceeding with any work on site, shall furnish in writing to the Owner through the Architect the name and qualifications of a proposed superintendent. The Architect may reply within 14 days to the Contractor in writing stating (1) whether the Owner or the Architect has reasonable objection to the proposed superintendent or (2) that the Architect requires additional time to review. Failure of the Architect to reply within the 14 day period shall constitute notice of no reasonable objection.

§ 3.9.3 The Contractor shall not employ a proposed superintendent to whom the Owner or Architect has made reasonable and timely objection. The Contractor shall not change the superintendent without the Owner's consent, which shall not unreasonably be withheld or delayed.

§ 3.9.4 A qualified General Superintendent shall be present on the project site whenever work is being performed, unless otherwise authorized in writing by the Owner. The Contractor shall notify the Owner whenever the superintendent will be absent for four hours or more. This notification shall include the name of the designated substitute. Any substitute shall be familiar with the project and have the same authority of the primary superintendent. Verbal notification is acceptable for periods less than one full workday.

1. The qualified General Superintendent shall remain on site each day throughout all work days whenever contract work is performed through the punch list period **and until all punch list items are complete.** Lack of supervision shall constitute a reduction in the Contract Amount of General Conditions, Supervision, or other category which solely represents at the General Contractor's work responsibility, in the amount of $250.00 per day, or any portion of a day, based on the amount indicated.

§ 3.9.5 The superintendent shall serve as a day to day point of contact on the Project for the Owner and shall, as a minimum, have the authority to:

a. Act on behalf of the Contractor;

b. Direct the work of Subcontractors;

c. Respond to directed changes in the schedule;

d. Provide detailed updates to and respond to inquiries from the Owner on the progress of the work;

e. Act upon verbal and written notification of non-conforming work;

AIA Document A201™ – 2007. Copyright © 1911, 1915, 1918, 1925, 1937, 1951, 1958, 1961, 1963, 1966, 1970, 1976, 1987, 1997 and 2007 by The American Institute of Architects. All rights reserved. WARNING: This AIA® Document is protected by U.S. Copyright Law and International Treaties. Unauthorized reproduction or distribution of this AIA® Document, or any portion of it, may result in severe civil and criminal penalties, and will be prosecuted to the maximum extent possible under the law. This document was produced by AIA software at 14:20:30 on 03/31/2015 under Order No.6386580634_1 which expires on 08/14/2015, and is not for resale.
User Notes: (1865697126)

f. Respond to any complaints regarding the conduct or actions of any employee of the Contractor or any Subcontractor.

§ 3.10 CONTRACTOR'S CONSTRUCTION SCHEDULES

§ 3.10.1 The Contractor, promptly after being awarded the Contract, shall prepare and submit for the Owner's and Architect's information a Contractor's construction schedule for the Work. At the Pre-Construction Conference, the Contractor shall submit to the Engineer for its timely review a preliminary construction schedule indicating the times (number of days or dates) for starting and completing the various stages of the Work. The schedule shall not exceed time limits current under the Contract Documents, shall be revised at appropriate intervals as required by the conditions of the Work and Project, shall be related to the entire Project to the extent required by the Contract Documents, and shall provide for expeditious and practicable execution of the Work.

1. The progress schedule shall be in the form of a bar graph and shall identify each major or critical activity. The progress schedule shall be updated monthly. Five (5) copies of the updated progress schedule shall be submitted with each Application for Payment.

§ 3.10.2 The Contractor shall prepare a submittal schedule, promptly after being awarded the Contract and thereafter as necessary to maintain a current submittal schedule, and shall submit the schedule(s) for the Architect's approval. The Architect's approval shall not unreasonably be delayed or withheld. The submittal schedule shall (1) be coordinated with the Contractor's construction schedule, and (2) allow the Architect reasonable time to review submittals. If the Contractor fails to submit a submittal schedule, the Contractor shall not be entitled to any increase in Contract Sum or extension of Contract Time based on the time required for review of submittals.

§ 3.10.3 The Contractor shall perform the Work in general accordance with the most recent schedules submitted to the Owner and Architect.

§ 3.11 DOCUMENTS AND SAMPLES AT THE SITE

The Contractor shall maintain at the site for the Owner one copy of the Drawings, Specifications, Addenda, Change Orders and other Modifications, in good order and marked currently to indicate field changes and selections made during construction, and one copy of approved Shop Drawings, Product Data, Samples and similar required submittals. These shall be available to the Architect and shall be delivered to the Architect for submittal to the Owner upon completion of the Work as a record of the Work as constructed.

§ 3.12 SHOP DRAWINGS, PRODUCT DATA AND SAMPLES

§ 3.12.1 Shop Drawings are drawings, diagrams, schedules and other data specially prepared for the Work by the Contractor or a Subcontractor, Sub-subcontractor, manufacturer, supplier or distributor to illustrate some portion of the Work.

1. Reproduction of the Contract Drawings, or any portion thereof, shall not be acceptable.

§ 3.12.2 Product Data are illustrations, standard schedules, performance charts, instructions, brochures, diagrams and other information furnished by the Contractor to illustrate materials or equipment for some portion of the Work.

§ 3.12.3 Samples are physical examples that illustrate materials, equipment or workmanship and establish standards by which the Work will be judged.

§ 3.12.4 Shop Drawings, Product Data, Samples and similar submittals are not Contract Documents. Their purpose is to demonstrate the way by which the Contractor proposes to conform to the information given and the design concept expressed in the Contract Documents for those portions of the Work for which the Contract Documents require submittals. Review by the Architect is subject to the limitations of Section 4.2.7. Informational submittals upon which the Architect is not expected to take responsive action may be so identified in the Contract Documents. Submittals that are not required by the Contract Documents may be returned by the Architect without action.

§ 3.12.5 The Contractor shall review for compliance with the Contract Documents, approve and submit to the Architect Shop Drawings, Product Data, Samples and similar submittals required by the Contract Documents in accordance with the submittal schedule approved by the Architect or, in the absence of an approved submittal

Init.
/
AIA Document A201™ – 2007. Copyright © 1911, 1915, 1918, 1925, 1937, 1951, 1958, 1961, 1963, 1966, 1970, 1976, 1987, 1997 and 2007 by The American Institute of Architects. **All rights reserved.** WARNING: This AIA® Document is protected by U.S. Copyright Law and International Treaties. Unauthorized reproduction or distribution of this AIA® Document, or any portion of it, may result in severe civil and criminal penalties, and will be prosecuted to the maximum extent possible under the law. This document was produced by AIA software at 14:20:30 on 03/31/2015 under Order No.6386580634_1 which expires on 08/14/2015, and is not for resale.
User Notes: (1865697126)

schedule, with reasonable promptness and in such sequence as to cause no delay in the Work or in the activities of the Owner or of separate contractors.

The Contractor, within **15 days from the Notice to Proceed,** shall submit to the Engineer for approval, a complete schedule of submittals for shop drawings and technical and/or engineering data sheets covering all items and equipment for this Contract as listed in each respective division. Submit for approval **six (6) copies of certified Shop Drawings and technical data sheets** plus sufficient copies for Contractor's use. Approval of the above submissions shall not relieve the Contractor from complying with the drawings and specifications, nor shall such approval be construed as a guarantee of the accuracy of dimensions or other covered items. The Engineer shall endeavor to process all drawings, data sheets, etc., within 21 calendar days of receipt unless impractical. Except for construction schedule and schedule of values that need to be turned over directly to the City for review/approval, the Contractor shall forward all other submittals for review/approval to only one clearing house. The City will notify the Contractor during the Pre-Construction Conference where to send these submittals.

1. Unless otherwise directed or specified, samples shall be submitted in duplicate. Samples shall be properly labeled, bearing the name and quality of material, name of the manufacturer, name of Project, name of the Contractor and the date of submission.

§ 3.12.6 By submitting Shop Drawings, Product Data, Samples and similar submittals, the Contractor represents to the Owner and Architect that the Contractor has (1) reviewed and approved them, (2) determined and verified materials, field measurements and field construction criteria related thereto, ~~or will do so~~ and (3) checked and coordinated the information contained within such submittals with the requirements of the Work and of the Contract Documents. All copies of Shop Drawings submitted for approval shall bear the following statement: "Checked and certified correct for conformance with Contract Documents." This statement shall be dated and signed by the Contractor and shall appear on each submittal. One copy of each approved submittal shall be kept at job site at all times.

§ 3.12.7 The Contractor shall perform no portion of the Work for which the Contract Documents require submittal and review of Shop Drawings, Product Data, Samples or similar submittals until the respective submittal has been approved by the Architect.

1. The Contractor shall furnish to the field as many prints of the approved Shop Drawings as may be required.

§ 3.12.8 The Work shall be in accordance with approved submittals except that the Contractor shall not be relieved of responsibility for deviations from requirements of the Contract Documents by the Architect's approval of Shop Drawings, Product Data, Samples or similar submittals unless the Contractor has specifically informed the Architect in writing of such deviation at the time of submittal and (1) the Architect has given written approval to the specific deviation as a minor change in the Work, or (2) a Change Order or Construction Change Directive has been issued authorizing the deviation. The Contractor shall not be relieved of responsibility for errors or omissions in Shop Drawings, Product Data, Samples or similar submittals by the Architect's approval thereof.

§ 3.12.9 The Contractor shall direct specific attention, in writing or on resubmitted Shop Drawings, Product Data, Samples or similar submittals, to revisions other than those requested by the Architect on previous submittals. In the absence of such written notice, the Architect's approval of a resubmission shall not apply to such revisions.

§ 3.12.10 The Contractor shall not be required to provide professional services that constitute the practice of architecture or engineering unless such services are specifically required by the Contract Documents for a portion of the Work or unless the Contractor needs to provide such services in order to carry out the Contractor's responsibilities for construction means, methods, techniques, sequences and procedures. The Contractor shall not be required to provide professional services in violation of applicable law. If professional design services or certifications by a design professional related to systems, materials or equipment are specifically required of the Contractor by the Contract Documents, the Owner and the Architect will specify all performance and design criteria that such services must satisfy. The Contractor shall cause such services or certifications to be provided by a properly licensed design professional, whose signature and seal shall appear on all drawings, calculations, specifications, certifications, Shop Drawings and other submittals prepared by such professional. Shop Drawings and other submittals related to the Work designed or certified by such professional, if prepared by others, shall bear

AIA Document A201™ – 2007. Copyright © 1911, 1915, 1918, 1925, 1937, 1951, 1958, 1961, 1963, 1966, 1970, 1976, 1987, 1997 and 2007 by The American Institute of Architects. **All rights reserved.** WARNING: This AIA® Document is protected by U.S. Copyright Law and International Treaties. Unauthorized reproduction or distribution of this AIA® Document, or any portion of it, may result in severe civil and criminal penalties, and will be prosecuted to the maximum extent possible under the law. This document was produced by AIA software at 14:20:30 on 03/31/2015 under Order No.6386580634_1 which expires on 08/14/2015, and is not for resale.
User Notes: (1865697126)

such professional's written approval when submitted to the Architect. The Owner and the Architect shall be entitled to rely upon the adequacy, accuracy and completeness of the services, certifications and approvals performed or provided by such design professionals, provided the Owner and Architect have specified to the Contractor all performance and design criteria that such services must satisfy. Pursuant to this Section 3.12.10, the Architect will review, approve or take other appropriate action on submittals only for the limited purpose of checking for conformance with information given and the design concept expressed in the Contract Documents. The Contractor shall not be responsible for the adequacy of the performance and design criteria specified in the Contract Documents.

§ 3.13 USE OF SITE

The Contractor shall confine operations at the site to areas permitted by applicable laws, statutes, ordinances, codes, rules and regulations, and lawful orders of public authorities and the Contract Documents and shall not unreasonably encumber the site with materials or equipment.

§ 3.14 CUTTING AND PATCHING

§ 3.14.1 The Contractor shall be responsible for cutting, fitting or patching required to complete the Work or to make its parts fit together properly. All areas requiring cutting, fitting and patching shall be restored to the condition existing prior to the cutting, fitting and patching, unless otherwise required by the Contract Documents.

§ 3.14.2 The Contractor shall not damage or endanger a portion of the Work or fully or partially completed construction of the Owner or separate contractors by cutting, patching or otherwise altering such construction, or by excavation. The Contractor shall not cut or otherwise alter such construction by the Owner or a separate contractor except with written consent of the Owner and of such separate contractor; such consent shall not be unreasonably withheld. The Contractor shall not unreasonably withhold from the Owner or a separate contractor the Contractor's consent to cutting or otherwise altering the Work.

§ 3.14.3 UNDERGROUND UTILITY DAMAGE PREVENTION ACT

The Contractor shall be required and agrees to comply with all the provisions of the Virginia Underground Utility Damage Prevention Act (Section 56-265.14, *et seq.* Code of Virginia, 1950, as amended) and hereby agrees to hold the City of Norfolk harmless against any loss, damages or claims of any nature whatsoever arising out of the Contractor's failure to comply with the requirements of said Act.

§ 3.15 CLEANING UP

§ 3.15.1 The Contractor shall keep the premises and surrounding area free from accumulation of waste materials or rubbish caused by operations under the Contract. At completion of the Work, the Contractor shall remove waste materials, rubbish, the Contractor's tools, construction equipment, machinery and surplus materials from and about the Project. In addition, immediately after the completion of the Work, or any portion thereof, the Contractor shall restore the facility, street, and surrounding area to a condition as clean as before the Work was begun. The drainage system shall also be inspected and cleaned by the Contractor. If done by the City or its agents, any expense the City may incur will be charged against the Contractor and deducted before Final Payment is made. The Contractor will be required to back fill along the edges of the sidewalks, driveways and curbs where settlement has occurred, and reshape and reslope where directed. Site must be maintained regularly according to State and City regulations, including regular grass cutting. During the progress of the Work, the sidewalks and portions of the streets adjoining the Work, or in its vicinity, must not be obstructed or littered, and the adjacent sidewalks and gutters must be kept clean as directed by the Engineer.

§ 3.15.2 If the Contractor fails to clean up as provided in the Contract Documents, the Owner may do so and ~~Owner shall be entitled to reimbursement from~~ the costs thereof shall be charged to the Contractor.

§ 3.16 ACCESS TO WORK

The Contractor shall provide the Owner and Architect access to the Work in preparation and progress wherever located.

§ 3.17 ROYALTIES, PATENTS AND COPYRIGHTS

The Contractor shall pay all royalties and license fees. The Contractor shall defend suits or claims for infringement of copyrights and patent rights and shall hold the Owner and Architect harmless from loss on account thereof, but

Init.
/
AIA Document A201™ – 2007. Copyright © 1911, 1915, 1918, 1925, 1937, 1951, 1958, 1961, 1963, 1966, 1970, 1976, 1987, 1997 and 2007 by The American Institute of Architects. All rights reserved. WARNING: This AIA® Document is protected by U.S. Copyright Law and International Treaties. Unauthorized reproduction or distribution of this AIA® Document, or any portion of it, may result in severe civil and criminal penalties, and will be prosecuted to the maximum extent possible under the law. This document was produced by AIA software at 14:20:30 on 03/31/2015 under Order No.6386580634_1 which expires on 08/14/2015, and is not for resale.
User Notes: (1865697126)

shall not be responsible for such defense or loss when a particular design, process or product of a particular manufacturer or manufacturers is required by the Contract Documents, or where the copyright violations are contained in Drawings, Specifications or other documents prepared by the Owner or Architect. However, if the Contractor has reason to believe that the required design, process or product is an infringement of a copyright or a patent, the Contractor shall be responsible for such loss unless such information is promptly furnished to the Architect.

§ 3.18 INDEMNIFICATION

§ 3.18.1 To the fullest extent permitted by law the Contractor shall indemnify and hold harmless the Owner, Architect, Architect's consultants, and agents and employees of any of them from and against claims, damages, losses and expenses, including but not limited to attorneys' fees, arising out of or resulting from performance of the Work, provided that such claim, damage, loss or expense is attributable to bodily injury, sickness, disease or death, or to injury to or destruction of tangible property (other than the Work itself), but only to the extent caused by the negligent acts or omissions of the Contractor, a Subcontractor, anyone directly or indirectly employed by them or anyone for whose acts they may be liable, regardless of whether or not such claim, damage, loss or expense is caused in part by a party indemnified hereunder. Such obligation shall not be construed to negate, abridge, or reduce other rights or obligations of indemnity ~~that~~ which would otherwise exist as to a party or person described in this Section 3.18.

§ 3.18.1.1 The requirements of this Paragraph 3.18 shall be incorporated into the Contractor's insurance policies in a manner approved by the Owner.

§ 3.18.2 In claims against any person or entity indemnified under this Section 3.18 by an employee of the Contractor, a Subcontractor, anyone directly or indirectly employed by them or anyone for whose acts they may be liable, the indemnification obligation under Section 3.18.1 shall not be limited by a limitation on amount or type of damages, compensation or benefits payable by or for the Contractor or a Subcontractor under workers' compensation acts, disability benefit acts or other employee benefit acts.

ARTICLE 4 ARCHITECT

§ 4.1 GENERAL

§ 4.1.1 The ~~Owner shall retain an architect~~ architect is the person lawfully licensed to practice architecture or an entity lawfully practicing architecture ~~in the jurisdiction where the Project is located. That person or entity is identified as the Architect~~ identified as such in the Agreement and is referred to throughout the Contract Documents as if singular in number. The term "Architect" means the Architect or the Architect's authorized representative.

§ 4.1.2 Duties, responsibilities and limitations of authority of the Architect as set forth in the Contract Documents shall not be restricted, modified or extended without written consent of the Owner, Contractor and Architect. Consent shall not be unreasonably withheld.

~~**§ 4.1.3** If the employment of the Architect is terminated, the Owner shall employ a successor architect as to whom the Contractor has no reasonable objection and whose status under the Contract Documents shall be that of the Architect.~~

§ 4.1.3. Intentionally Omitted.

§ 4.2 ADMINISTRATION OF THE CONTRACT

§ 4.2.1 As the Owner's Project representative, the Consulting Architect/Engineer's duties, responsibilities and limitations of authority shall be presented during the Pre-Construction Conference. The Architect will provide administration of the Contract as described in the Contract Documents and will be an Owner's representative during construction until the date the Architect issues the final Certificate for Payment. The Architect will have authority to act on behalf of the Owner only to the extent provided in the Contract Documents.

§ 4.2.1.1 Engineer – An individual or entity having an Agreement with the Owner to furnish services as Owner's independent professional consultant with respect to the Project and who is identified as such in the Agreement.

§ 4.2.2 The ~~Architect~~ Architect, as a representative of the Owner, will visit the site at intervals appropriate to the stage of ~~construction, or as otherwise agreed with the Owner, to become generally familiar with the~~ the Contractor's

AIA Document A201™ – 2007. Copyright © 1911, 1915, 1918, 1925, 1937, 1951, 1958, 1961, 1963, 1966, 1970, 1976, 1987, 1997 and 2007 by The American Institute of Architects. All rights reserved. WARNING: This AIA® Document is protected by U.S. Copyright Law and International Treaties. Unauthorized reproduction or distribution of this AIA® Document, or any portion of it, may result in severe civil and criminal penalties, and will be prosecuted to the maximum extent possible under the law. This document was produced by AIA software at 14:20:30 on 03/31/2015 under Order No.6386580634_1 which expires on 08/14/2015, and is not for resale.
User Notes: (1865697126)

operations (1) to become familiar with and to keep the Owner informed about the progress and quality of the portion of the Work completed, and ~~to determine in general if the Work observed is being performed in a manner indicating that~~ (2) to endeavor to guard the Owner against defects and deficiencies in the Work, when fully completed, will be in accordance with the Contract Documents. However, the Architect will not be required to make exhaustive or continuous on-site inspections to check the quality or quantity of the Work. The Architect will ~~not~~ neither have control over, charge of, ~~or responsibility~~ nor be responsible for, the construction means, methods, techniques, sequences or procedures, or for the safety precautions and programs in connection with the Work, since these are solely the Contractor's rights and responsibilities under the Contract Documents, except as provided in Section 3.3.1.

§ 4.2.3 On the basis of the site visits, the Architect will keep the Owner reasonably informed about the progress and quality of the portion of the Work completed, and report to the Owner (1) known deviations from the Contract Documents and from the most recent construction schedule submitted by the Contractor, and (2) defects and deficiencies observed in the Work. The Architect will not be responsible for the Contractor's failure to perform the Work in accordance with the requirements of the Contract Documents. The Architect will not have control over or charge of and will not be responsible for acts or omissions of the Contractor, Subcontractors, or their agents or employees, or any other persons or entities performing portions of the Work.

§ 4.2.4 COMMUNICATIONS FACILITATING CONTRACT ADMINISTRATION
Except as otherwise provided in the Contract Documents or when direct communications have been specially authorized, the Owner and Contractor shall endeavor to communicate with each other through the Architect about matters arising out of or relating to the Contract. Communications by and with the Architect's consultants shall be through the Architect. Communications by and with Subcontractors and material suppliers shall be through the Contractor. Communications by and with separate contractors shall be through the Owner.

§ 4.2.5 Based on the Architect's evaluations of the Contractor's Applications for Payment, the Architect will review and certify the amounts due the Contractor and will issue Certificates for Payment in such amounts.

§ 4.2.6 The Architect has authority to reject Work that does not conform to the Contract Documents. Whenever the Architect considers it necessary or advisable, the Architect will have authority to require inspection or testing of the Work in accordance with Sections 13.5.2 and 13.5.3, whether or not such Work is fabricated, installed or completed. However, neither this authority of the Architect nor a decision made in good faith either to exercise or not to exercise such authority shall give rise to a duty or responsibility of the Architect to the Contractor, Subcontractors, material and equipment suppliers, their agents or employees, or other persons or entities performing portions of the Work.

§ 4.2.7 The Architect will review and approve, or take other appropriate action upon, the Contractor's submittals such as Shop Drawings, Product Data and Samples, but only for the limited purpose of checking for conformance with information given and the design concept expressed in the Contract Documents. The Architect's action will be taken in accordance with the submittal schedule approved by the Architect or, in the absence of an approved submittal schedule, with reasonable promptness while allowing sufficient time in the Architect's professional judgment to permit adequate review. Review of such submittals is not conducted for the purpose of determining the accuracy and completeness of other details such as dimensions and quantities, or for substantiating instructions for installation or performance of equipment or systems, all of which remain the responsibility of the Contractor as required by the Contract Documents. The Architect's review of the Contractor's submittals shall not relieve the Contractor of the obligations under Sections 3.3, 3.5 and 3.12. The Architect's review shall not constitute approval of safety precautions or, unless otherwise specifically stated by the Architect, of any construction means, methods, techniques, sequences or procedures. The Architect's approval of a specific item shall not indicate approval of an assembly of which the item is a component.

§ 4.2.8 The Architect will prepare Change Orders and Construction Change Directives, and may authorize minor changes in the Work as provided in Section 7.4. The Architect will investigate and make determinations and recommendations regarding concealed and unknown conditions as provided in Section 3.7.4.

§ 4.2.9 The Architect will conduct inspections to determine the date or dates of Substantial Completion and the date of final completion; issue Certificates of Substantial Completion pursuant to Section 9.8; receive and forward to the Owner, for the Owner's review and records, written warranties and related documents required by the Contract and

AIA Document A201™ – 2007. Copyright © 1911, 1915, 1918, 1925, 1937, 1951, 1958, 1961, 1963, 1966, 1970, 1976, 1987, 1997 and 2007 by The American Institute of Architects. **All rights reserved.** WARNING: This AIA® Document is protected by U.S. Copyright Law and International Treaties. Unauthorized reproduction or distribution of this AIA® Document, or any portion of it, may result in severe civil and criminal penalties, and will be prosecuted to the maximum extent possible under the law. This document was produced by AIA software at 14:20:30 on 03/31/2015 under Order No.6386580634_1 which expires on 08/14/2015, and is not for resale.
User Notes:

assembled by the Contractor pursuant to Section 9.10; and issue a final Certificate for Payment pursuant to Section 9.10.

§ 4.2.10 If the Owner and Architect agree, the Architect will provide one or more project representatives to assist in carrying out the Architect's responsibilities at the site. The duties, responsibilities and limitations of authority of such project representatives shall be as set forth in an exhibit to be incorporated in the Contract Documents.

§ 4.2.11 The Architect will interpret and decide matters concerning performance under, and requirements of, the Contract Documents on written request of either the Owner or Contractor. The Architect's response to such requests will be made in writing within any time limits agreed upon or otherwise with reasonable promptness.

§ 4.2.12 Interpretations and decisions of the Architect will be consistent with the intent of, and reasonably inferable from, the Contract Documents and will be in writing or in the form of drawings. When making such interpretations and decisions, the Architect will endeavor to secure faithful performance by both Owner and Contractor, will not show partiality to either and will not be liable for results of interpretations or decisions rendered in good faith.

§ 4.2.13 The Architect's decisions on matters relating to aesthetic effect will be final if consistent with the intent expressed in the Contract Documents.

§ 4.2.14 The Architect will review and respond to requests for information about the Contract Documents. The Architect's response to such requests will be made in writing within any time limits agreed upon or otherwise with reasonable promptness. If appropriate, the Architect will prepare and issue supplemental Drawings and Specifications in response to the requests for information.

§ 4.2.15 PRE-CONSTRUCTION CONFERENCE. Before starting the Work, the Architect/Engineer/Owner will schedule a conference to review the requirements on such matters as Project supervision and on-site inspection, Shop Drawing schedules and submission, progress schedules and reports, payrolls, payments to contractors, contract change orders, insurance, safety, labor provisions and equal opportunity in employment and any other items pertinent to the Project. Present at the conference will be the Architect/Engineer, Owner, Project Representative, the Contractor, and its Superintendent for the project.

ARTICLE 5 SUBCONTRACTORS

§ 5.1 DEFINITIONS

§ 5.1.1 A Subcontractor is a person or entity who has a direct contract with the Contractor to perform a portion of the Work at the site. The term "Subcontractor" is referred to throughout the Contract Documents as if singular in number and means a Subcontractor or an authorized representative of the Subcontractor. The term "Subcontractor" does not include a separate contractor or subcontractors of a separate contractor.

§ 5.1.2 A Sub-subcontractor is a person or entity who has a direct or indirect contract with a Subcontractor to perform a portion of the Work at the site. The term "Sub-subcontractor" is referred to throughout the Contract Documents as if singular in number and means a Sub-subcontractor or an authorized representative of the Sub-subcontractor.

§ 5.2 AWARD OF SUBCONTRACTS AND OTHER CONTRACTS FOR PORTIONS OF THE WORK

§ 5.2.1 Unless otherwise stated in the Contract Documents or the bidding requirements, the Contractor, ~~as soon as practicable~~ within 15 days after award of the Contract, shall furnish in writing to the Owner through the Architect the names of persons or entities (including those who are to furnish materials or equipment fabricated to a special design) proposed for ~~each principal portion of~~ the Work. The Architect may reply within 14 days to the Contractor in writing stating (1) whether the Owner or the Architect has reasonable objection to any such proposed person or entity or (2) that the Architect requires additional time for review. Failure of the Owner or Architect to reply within the 14-day period shall constitute notice of no reasonable objection.

§ 5.2.2 The Contractor shall not contract with a proposed person or entity to whom the Owner or Architect has made reasonable and timely objection. The Contractor shall not be required to contract with anyone to whom the Contractor has made reasonable objection.

AIA Document A201™ – 2007. Copyright © 1911, 1915, 1918, 1925, 1937, 1951, 1958, 1961, 1963, 1966, 1970, 1976, 1987, 1997 and 2007 by The American Institute of Architects. **All rights reserved.** WARNING: This AIA® Document is protected by U.S. Copyright Law and International Treaties. Unauthorized reproduction or distribution of this AIA® Document, or any portion of it, may result in severe civil and criminal penalties, and will be prosecuted to the maximum extent possible under the law. This document was produced by AIA software at 14:20:30 on 03/31/2015 under Order No.6386580634_1 which expires on 08/14/2015, and is not for resale.
User Notes:

(1865697126)

§ 5.2.3 If the Owner or Architect has reasonable objection to a person or entity proposed by the Contractor, the Contractor shall propose another to whom the Owner or Architect has no reasonable ~~objection. If the proposed but rejected Subcontractor was reasonably capable of performing the Work, the Contract Sum and Contract Time shall be increased or decreased by the difference, if any, occasioned by such change, and an appropriate Change Order shall be issued before commencement of the substitute Subcontractor's Work. However, no increase in the Contract Sum or Contract Time shall be allowed for such change unless the Contractor has acted promptly and responsively in submitting names as required.~~objection..

§ 5.2.4 The Contractor shall not substitute a Subcontractor, person or entity previously selected if the Owner or ~~Architect~~ Architect, upon written notice of such intent, makes reasonable objection to such substitution.

§ 5.3 SUBCONTRACTUAL RELATIONS

By appropriate agreement, written where legally required for validity, the Contractor shall require each Subcontractor, to the extent of the Work to be performed by the Subcontractor, to be bound to the Contractor by terms of the Contract Documents, and to assume toward the Contractor all the obligations and responsibilities, including the responsibility for safety of the Subcontractor's Work, which the Contractor, by these Documents, assumes toward the Owner and Architect. Each subcontract agreement shall preserve and protect the rights of the Owner and Architect under the Contract Documents with respect to the Work to be performed by the Subcontractor so that subcontracting thereof will not prejudice such rights, and shall allow to the Subcontractor, unless specifically provided otherwise in the subcontract agreement, the benefit of all rights, remedies and redress against the Contractor that the Contractor, by the Contract Documents, has against the Owner. Where appropriate, the Contractor shall require each Subcontractor to enter into similar agreements with Sub-subcontractors. The Contractor shall make available to each proposed Subcontractor, prior to the execution of the subcontract agreement, copies of the Contract Documents to which the Subcontractor will be bound, and, upon written request of the Subcontractor, identify to the Subcontractor terms and conditions of the proposed subcontract agreement that may be at variance with the Contract Documents. Subcontractors will similarly make copies of applicable portions of such documents available to their respective proposed Sub-subcontractors.

§ 5.4 CONTINGENT ASSIGNMENT OF SUBCONTRACTS

§ 5.4.1 Each subcontract agreement for a portion of the Work is assigned by the Contractor to the Owner, provided that

.1 assignment is effective only after termination of the Contract by the Owner for cause pursuant to Section 14.2 and only for those subcontract agreements that the Owner accepts by notifying the Subcontractor and Contractor in writing; and

.2 assignment is subject to the prior rights of the surety, if any, obligated under bond relating to the Contract.

~~When the Owner accepts the assignment of a subcontract agreement, the Owner assumes the Contractor's rights and obligations under the subcontract.~~.

§ 5.4.2 Upon such assignment, if the Work has been suspended for more than 30 days, the Subcontractor's compensation shall be equitably adjusted for increases in cost resulting from the suspension.

~~§ 5.4.3 Upon such assignment to the Owner under this Section 5.4, the Owner may further assign the subcontract to a successor contractor or other entity. If the Owner assigns the subcontract to a successor contractor or other entity, the Owner shall nevertheless remain legally responsible for all of the successor contractor's obligations under the subcontract.~~

§ 5.4.3. Intentionally Omitted.

§ 5.5 SUBCONTRACTORS COORDINATION OF WORK

Every subcontractor performing work that affects others shall provide for all requirements of the other trades, notwithstanding the Contractor's responsibility to coordinate the Work. Should the work provided by unsuitable for the application of work by any other subcontractor, the subcontractor shall notify the Contractor and the Engineer in writing immediately. The Contractor is required to forward a copy of correspondence from his subcontractors providing notice of unsuitable work.

Init.
/
AIA Document A201™ – 2007. Copyright © 1911, 1915, 1918, 1925, 1937, 1951, 1958, 1961, 1963, 1966, 1970, 1976, 1987, 1997 and 2007 by The American Institute of Architects. All rights reserved. WARNING: This AIA® Document is protected by U.S. Copyright Law and International Treaties. Unauthorized reproduction or distribution of this AIA® Document, or any portion of it, may result in severe civil and criminal penalties, and will be prosecuted to the maximum extent possible under the law. This document was produced by AIA software at 14:20:30 on 03/31/2015 under Order No.6386580634_1 which expires on 08/14/2015, and is not for resale.
User Notes:
(1865697126)

ARTICLE 6 CONSTRUCTION BY OWNER OR BY SEPARATE CONTRACTORS

§ 6.1 OWNER'S RIGHT TO PERFORM CONSTRUCTION AND TO AWARD SEPARATE CONTRACTS

§ 6.1.1 The Owner reserves the right to perform construction or operations related to the Project with the Owner's own forces, and to award separate contracts in connection with other portions of the Project or other construction or operations on the site under Conditions of the Contract identical or substantially similar to these including those portions related to insurance and waiver of ~~subrogation. If the Contractor claims that delay or additional cost is involved because of such action by the Owner, the Contractor shall make such Claim as provided in Article 15.~~ subrogation..

§ 6.1.2 When separate contracts are awarded for different portions of the Project or other construction or operations on the site, the term "Contractor" in the Contract Documents in each case shall mean the Contractor who executes each separate Owner-Contractor Agreement.

§ 6.1.3 The Owner shall provide for coordination of the activities of the Owner's own forces and of each separate contractor with the Work of the Contractor, who shall cooperate with them. The Contractor shall participate with other separate contractors and the Owner in reviewing their construction schedules. The Contractor shall make any revisions to the construction schedule deemed necessary after a joint review and mutual agreement. The construction schedules shall then constitute the schedules to be used by the Contractor, separate contractors and the Owner until subsequently revised.

§ 6.1.4 Unless otherwise provided in the Contract Documents, when the Owner performs construction or operations related to the Project with the Owner's own forces, the Owner shall be deemed to be subject to the same obligations and to have the same rights that apply to the Contractor under the Conditions of the Contract, including, without excluding others, those stated in Article 3, this Article 6 and Articles 10, 11 and 12.

§ 6.2 MUTUAL RESPONSIBILITY

§ 6.2.1 The Contractor shall afford the Owner and separate contractors reasonable opportunity for introduction and storage of their materials and equipment and performance of their activities, and shall connect and coordinate the Contractor's construction and operations with theirs as required by the Contract Documents.

§ 6.2.2 If part of the Contractor's Work depends for proper execution or results upon construction or operations by the Owner or a separate contractor, the Contractor shall, prior to proceeding with that portion of the Work, promptly report to the Architect apparent discrepancies or defects in such other construction that would render it unsuitable for such proper execution and results. Failure of the Contractor so to report shall constitute an acknowledgment that the Owner's or separate contractor's completed or partially completed construction is fit and proper to receive the Contractor's Work, except as to defects not then reasonably discoverable.

§ 6.2.3 The Contractor shall reimburse the Owner for costs the Owner incurs that are payable to a separate contractor because of the Contractor's delays, improperly timed activities or defective construction. The Owner shall be responsible to the Contractor for costs the Contractor incurs because of a separate contractor's delays, improperly timed activities, damage to the Work or defective construction.

§ 6.2.4 The Contractor shall promptly remedy damage the Contractor wrongfully causes to completed or partially completed construction or to property of the Owner or separate contractors as provided in Section 10.2.5.

§ 6.2.5 The Owner and each separate contractor shall have the same responsibilities for cutting and patching as are described for the Contractor in Section 3.14.

§ 6.3 OWNER'S RIGHT TO CLEAN UP

If a dispute arises among the Contractor, separate contractors and the Owner as to the responsibility under their respective contracts for maintaining the premises and surrounding area free from waste materials and rubbish, the Owner may clean up and the Architect will allocate the cost among those responsible.

AIA Document A201™ – 2007. Copyright © 1911, 1915, 1918, 1925, 1937, 1951, 1958, 1961, 1963, 1966, 1970, 1976, 1987, 1997 and 2007 by The American Institute of Architects. All rights reserved. WARNING: This AIA® Document is protected by U.S. Copyright Law and International Treaties. Unauthorized reproduction or distribution of this AIA® Document, or any portion of it, may result in severe civil and criminal penalties, and will be prosecuted to the maximum extent possible under the law. This document was produced by AIA software at 14:20:30 on 03/31/2015 under Order No.6386580634_1 which expires on 08/14/2015, and is not for resale.
User Notes:
(1865697126)

ARTICLE 7 CHANGES IN THE WORK

§ 7.1 GENERAL

§ 7.1.1 Changes in the Work may be accomplished after execution of the Contract, and without invalidating the Contract, by Change Order, Construction Change Directive or order for a minor change in the Work, subject to the limitations stated in this Article 7 and elsewhere in the Contract Documents.

§ 7.1.2 A Change Order shall be based upon agreement ~~among the Owner, Contractor and Architect; a Construction Change Directive requires agreement by the Owner and Architect and may or~~ between the Owner and Contractor; a Construction Change Directive may not be agreed to by the Contractor; an order for a minor change in the Work may be issued by the Architect alone.

§ 7.1.3 Changes in the Work shall be performed under applicable provisions of the Contract Documents, and the Contractor shall proceed promptly, unless otherwise provided in the Change Order, Construction Change Directive or order for a minor change in the Work.

§ 7.1.4 Modifications shall be in compliance with the Code of the City of Norfolk, Virginia, Chapter 33.1.

§ 7.2 CHANGE ORDERS

§ 7.2.1 A Change Order is a written instrument prepared by the Architect and signed by the Owner, Contractor and Architect stating their agreement upon all of the following:

.1 The change in the Work;
.2 The amount of the adjustment, if any, in the Contract Sum; and
.3 The extent of the adjustment, if any, in the Contract Time.

§ 7.3 CONSTRUCTION CHANGE DIRECTIVES

§ 7.3.1 A Construction Change Directive is a written order prepared by the Architect and signed by the Owner and Architect, directing a change in the Work prior to agreement on adjustment, if any, in the Contract Sum or Contract Time, or both. The Owner may by Construction Change Directive, without invalidating the Contract, order changes in the Work within the general scope of the Contract consisting of additions, deletions or other revisions, the Contract Sum and Contract Time being adjusted accordingly.

§ 7.3.2 A Construction Change Directive shall be used in the absence of total agreement on the terms of a Change Order.

§ 7.3.3 If the Construction Change Directive provides for an adjustment to the Contract Sum, the adjustment shall be based on one of the following methods:

.1 Mutual acceptance of a lump sum properly itemized and supported by sufficient substantiating data to permit evaluation;

.2 ~~Unit prices stated in the Contract Documents or subsequently agreed upon;~~Where the Contract Documents provide that all or part of the Work is to be Unit Price Work, initially the Contract Price will be deemed to include for all Unit Price Work an amount equal to the sum of the unit price for each separately identified item of Unit Price Work times the estimated quantity of each item as indicated in the Agreement. The estimated quantities of items of Unit Price work are not guaranteed and are solely for the purpose of comparison of Bids and determining an initial Contract Price. Determinations of the actual quantities and classifications of Unit Price Work performed by Contractor will be made by Architect/Engineer's recommendation to the City as follows;

Architect/Engineer will review with Contractor the Architect/Engineer's preliminary determinations on such matters before rendering a written recommendation thereon (by endorsement of an Application for Payment or otherwise). City's written decision thereon (by approval of Application for Payment or otherwise) will be final and binding (except as modified by Architect/Engineer to reflect changed factual conditions or more accurate data) upon Contractor, subject to the provisions of Paragraph 7.3.4.

Each unit price will be deemed to include an amount considered by Contractor to be adequate to cover Contractor's overhead and profit for each separately identified item.

AIA Document A201™ – 2007. Copyright © 1911, 1915, 1918, 1925, 1937, 1951, 1958, 1961, 1963, 1966, 1970, 1976, 1987, 1997 and 2007 by The American Institute of Architects. All rights reserved. WARNING: This AIA® Document is protected by U.S. Copyright Law and International Treaties. Unauthorized reproduction or distribution of this AIA® Document, or any portion of it, may result in severe civil and criminal penalties, and will be prosecuted to the maximum extent possible under the law. This document was produced by AIA software at 14:20:30 on 03/31/2015 under Order No.6386580634_1 which expires on 08/14/2015, and is not for resale.
User Notes:

(1865697126)

.3 Cost to be determined in a manner agreed upon by the parties and a mutually acceptable fixed or percentage fee; or

.4 As provided in Section 7.3.7.

§ **7.3.4** If unit prices are stated in the Contract Documents or subsequently agreed upon, and if quantities originally contemplated are materially changed in a proposed Change Order or Construction Change Directive so that application of such unit prices to quantities of Work proposed will cause substantial inequity to the Owner or Contractor, the applicable unit prices shall be equitably ~~adjusted.~~adjusted provided that there is no corresponding adjustment with respect to any other item of Work.

§ **7.3.5** Upon receipt of a Construction Change Directive, the Contractor shall promptly proceed with the change in the Work involved and advise the Architect of the Contractor's agreement or disagreement with the method, if any, provided in the Construction Change Directive for determining the proposed adjustment in the Contract Sum or Contract Time.

§ **7.3.6** A Construction Change Directive signed by the Contractor indicates the Contractor's agreement therewith, including adjustment in Contract Sum and Contract Time or the method for determining them. Such agreement shall be effective immediately and shall be recorded as a Change Order.

§ **7.3.7** If the Contractor does not respond promptly or disagrees with the method for adjustment in the Contract Sum, the Architect shall determine the method and the adjustment on the basis of reasonable expenditures and savings of those performing the Work attributable to the change, including, in case of an increase in the Contract Sum, an amount for overhead and profit as set forth in the Agreement, or if no such amount is set forth in the Agreement, a reasonable amount. In such case, and also under Section 7.3.3.3, the Contractor shall keep and present, in such form as the Architect may prescribe, an itemized accounting together with appropriate supporting data. Unless otherwise provided in the Contract Documents, costs for the purposes of this Section 7.3.7 shall be limited to the following:

.1 Costs of labor, including social security, old age and unemployment insurance, fringe benefits required by agreement or custom, and workers' compensation insurance;

.2 Costs of materials, supplies and equipment, including cost of transportation, whether incorporated or consumed;

.3 Rental costs of machinery and equipment, exclusive of hand tools, whether rented from the Contractor or others;

.4 ~~Costs of premiums for all bonds and insurance, permit fees, and sales, use or similar taxes related to the Work; and~~Overhead and profit costs, except where such costs have been determined by means of Paragraph 7.3.3.2 above, wherein such costs are included in the unit prices, shall be determined as follows:;

Fifteen percent (15%) of the costs determined above shall be paid for overhead and profit of the Contractor or subcontractor(s) actually performing the work, including, but not limited to, field and home office expense, superintendent, taxes, subsistence expenses of any nature, premiums on bonds, insurance, and all other costs and expenses as determined by the City.

In the event the work is performed by a subcontractor or subcontractors, the Contractor shall be paid ten percent (10%) of the total costs determined above, excluding the subcontractor's or subcontractors' overhead and profit, to cover and compensate the Contractor for its overhead and profit;

.5 ~~Additional costs of supervision and field office personnel directly attributable to the change.~~. Intentionally Omitted.

§ **7.3.8** The amount of credit to be allowed by the Contractor to the Owner for a deletion or change that results in a net decrease in the Contract Sum shall be actual net cost as confirmed by the ~~Architect.~~ Architect plus overhead and profit to actual net cost.. When both additions and credits covering related Work or substitutions are involved in a change, the allowance for overhead and profit shall be figured on the basis of net increase, if any, with respect to that change.

AIA Document A201™ – 2007. Copyright © 1911, 1915, 1918, 1925, 1937, 1951, 1958, 1961, 1963, 1966, 1970, 1976, 1987, 1997 and 2007 by The American Institute of Architects. **All rights reserved.** WARNING: This AIA® Document is protected by U.S. Copyright Law and International Treaties. Unauthorized reproduction or distribution of this AIA® Document, or any portion of it, may result in severe civil and criminal penalties, and will be prosecuted to the maximum extent possible under the law. This document was produced by AIA software at 14:20:30 on 03/31/2015 under Order No.6386580634_1 which expires on 08/14/2015, and is not for resale.
User Notes: (1865697126)

§ 7.3.9 Pending final determination of the total cost of a Construction Change Directive to the Owner, the Contractor may not request payment for Work completed under the Construction Change Directive in Applications for Payment. The ~~Architect will make an interim determination for purposes of monthly certification for payment for those costs and certify for payment the amount that the Architect determines, in the Architect's professional judgment, to be reasonably justified. The Architect's interim determination of cost shall adjust the Contract Sum on the same basis as a Change Order, subject to the right of either party to disagree and assert a Claim in accordance with Article 15.~~ Contractor may only include the amounts of fully executed Change Orders in the Applications for Payment. .

§ 7.3.10 When the Owner and Contractor agree with a determination made by the Architect concerning the adjustments in the Contract Sum and Contract Time, or otherwise reach agreement upon the adjustments, such agreement shall be effective immediately and the Architect will prepare a Change Order. Change Orders may be issued for all or any part of a Construction Change Directive.

§ 7.4 MINOR CHANGES IN THE WORK

The Architect has authority to order minor changes in the Work not involving adjustment in the Contract Sum or extension of the Contract Time and not inconsistent with the intent of the Contract Documents. Such changes will be effected by written order signed by the Architect and shall be binding on the Owner and Contractor.

ARTICLE 8 TIME

§ 8.1 DEFINITIONS

§ 8.1.1 Unless otherwise provided, Contract Time is the period of time, including authorized adjustments, allotted in the Contract Documents for Substantial Completion of the Work.

§ 8.1.2 The date of commencement of the Work is the date established in the Agreement.

§ 8.1.3 The date of Substantial Completion is the date certified by the Architect in accordance with Section 9.8.

§ 8.1.4 The term "day" as used in the Contract Documents shall mean calendar day unless otherwise specifically defined.

§ 8.2 PROGRESS AND COMPLETION

§ 8.2.1 Time limits stated in the Contract Documents are of the essence of the Contract. By executing the Agreement the Contractor confirms that the Contract Time is a reasonable period for performing the Work.

§ 8.2.2 The Contractor shall not knowingly, except by agreement or instruction of the Owner in writing, prematurely commence operations on the site or elsewhere prior to the effective date of insurance required by Article 11 to be furnished by the Contractor and Owner. The date of commencement of the Work shall not be changed by the effective date of such insurance.

§ 8.2.3 The Contractor shall proceed expeditiously with adequate forces and shall achieve Substantial Completion within the Contract Time.

§ 8.3 DELAYS AND EXTENSIONS OF TIME

§ 8.3.1 If the Contractor is delayed at any time in the commencement or progress of the Work by an act or neglect of the Owner or Architect, or of an employee of either, or of a separate contractor employed by the Owner; or by changes ordered in the Work; or by labor disputes, fire, unusual delay in deliveries, unavoidable casualties or other causes beyond the Contractor's control; or by delay authorized by the ~~Owner pending mediation and arbitration;~~ Owner; or by other causes that the Architect determines may justify delay, then the Contract Time shall be extended by Change Order for such reasonable time as the Architect may determine.

§ 8.3.2 Claims relating to time shall be made in accordance with applicable provisions of Article 15.

§ 8.3.3 This Section 8.3 does not preclude recovery of damages for delay by either party under other provisions of the Contract Documents.

AIA Document A201™ – 2007. Copyright © 1911, 1915, 1918, 1925, 1937, 1951, 1958, 1961, 1963, 1966, 1970, 1976, 1987, 1997 and 2007 by The American Institute of Architects. All rights reserved. WARNING: This AIA® Document is protected by U.S. Copyright Law and International Treaties. Unauthorized reproduction or distribution of this AIA® Document, or any portion of it, may result in severe civil and criminal penalties, and will be prosecuted to the maximum extent possible under the law. This document was produced by AIA software at 14:20:30 on 03/31/2015 under Order No.6386580634_1 which expires on 08/14/2015, and is not for resale.
User Notes:

(1865697126)

ARTICLE 9 PAYMENTS AND COMPLETION

§ 9.1 CONTRACT SUM

The Contract Sum is stated in the Agreement and, including authorized adjustments, is the total amount payable by the Owner to the Contractor for performance of the Work under the Contract Documents.

§ 9.2 SCHEDULE OF VALUES

Where the Contract is based on a stipulated sum or Guaranteed Maximum Price, the Contractor shall submit to the Architect, before the first Application for Payment, a schedule of values allocating the entire Contract Sum to the various portions of the Work and prepared in such form and supported by such data to substantiate its accuracy as the Architect may require. This schedule, unless objected to by the Architect, shall be used as a basis for reviewing the Contractor's Applications for Payment.

§ 9.3 APPLICATIONS FOR PAYMENT

Based upon Applications for Payment submitted to the Engineer by the Contractor and certificates for payment issued by the Engineer, the City shall make monthly progress payments on account of the Contract Sum to the Contractor as provided in these General Conditions of the Contract for Construction as follows:

The City will endeavor to pay the Contractor, on or about the thirtieth (30th) calendar day after receipt of Request for Payment, ninety-five (95%) percent of the portion of the Contract Sum properly allocated to labor, materials and equipment incorporated in the work and ninety-five (95%) percent of the portion of the Contract Sum properly allocated to materials and equipment suitably stored at the site or at some other location agreed upon in writing by the parties, less the aggregate of previous payments in each case; provided however, the City, at any time after fifty (50%) percent of the work has been completed, if it finds that satisfactory progress is being made, may in its sole discretion make any of the remaining partial payments in full. Also, upon Substantial Completion of the work, the City may increase total payment to one hundred (100%) percent of the Contract sum, less such retainage as the Engineer shall determine for incomplete work and unsettled claims. But such full payment or payments shall in no manner be construed as reducing the amount of the bond or the liability of the Surety thereon, until Final Completion and acceptance of all lines of work herein set forth. Final Payment shall be made upon completion of all work and acceptance by the Engineer in accordance with the General Conditions.

The action of the Engineer by which the Contractor is to be bound according to the terms of this Contract shall be evidenced by his final estimate and certificate, all prior estimates upon which ninety-five (95%) percent or more may be made, being merely payments on account, and not payments for accepted work, and subject to the corrections of such final estimate, which may be made without notice to the Contractor thereof, or of the measurements upon which the same is based.

§ 9.3.1 At least ten days before the date established for each progress payment, the Contractor shall submit to the Architect an itemized Application for Payment prepared in accordance with the schedule of values, if required under Section 9.2, for completed portions of the Work. Such application shall be ~~notarized, if required,~~ certified by an officer of the firm and supported by such data substantiating the Contractor's right to payment as the Owner or Architect may require, such as copies of requisitions from Subcontractors and material suppliers, and shall reflect retainage if provided for in the Contract Documents.

§ 9.3.1.1 As provided in Section 7.3.9, such applications may not include requests for payment on account of changes in the Work that have been properly authorized by Construction Change Directives, ~~or by interim determinations of the Architect,~~ but not yet included in Change Orders.

§ 9.3.1.2 Applications for Payment shall not include requests for payment for portions of the Work for which the Contractor does not intend to pay a Subcontractor or material supplier, unless such Work has been performed by others whom the Contractor intends to pay.

§ 9.3.2 Unless otherwise provided in the Contract Documents, payments shall be made on account of materials and equipment delivered and suitably stored at the site for subsequent incorporation in the Work. If approved in advance by the Owner, payment may similarly be made for materials and equipment suitably stored off the site at a location agreed upon in writing. Payment for materials and equipment stored on or off the site shall be conditioned upon compliance by the Contractor with procedures satisfactory to the Owner to establish the Owner's title to such

AIA Document A201™ – 2007. Copyright © 1911, 1915, 1918, 1925, 1937, 1951, 1958, 1961, 1963, 1966, 1970, 1976, 1987, 1997 and 2007 by The American Institute of Architects. All rights reserved. WARNING: This AIA® Document is protected by U.S. Copyright Law and International Treaties. Unauthorized reproduction or distribution of this AIA® Document, or any portion of it, may result in severe civil and criminal penalties, and will be prosecuted to the maximum extent possible under the law. This document was produced by AIA software at 14:20:30 on 03/31/2015 under Order No.6386580634_1 which expires on 08/14/2015, and is not for resale.
User Notes: (1865697126)

materials and equipment or otherwise protect the Owner's interest, and shall include the costs of applicable insurance, storage and transportation to the site for such materials and equipment stored off the site.

§ 9.3.3 The Contractor warrants that title to all Work covered by an Application for Payment will pass to the Owner no later than the time of payment. The Contractor further warrants that upon submittal of an Application for Payment all Work for which Certificates for Payment have been previously issued and payments received from the Owner shall, to the best of the Contractor's knowledge, information and belief, be free and clear of liens, claims, security interests or encumbrances in favor of the Contractor, Subcontractors, material suppliers, or other persons or entities making a claim by reason of having provided labor, materials and equipment relating to the Work.

§ 9.4 CERTIFICATES FOR PAYMENT

§ 9.4.1 The Architect will, within seven days after receipt of the Contractor's Application for Payment, either issue to the Owner a Certificate for Payment, with a copy to the Contractor, for such amount as the Architect determines is properly due, or notify the Contractor and Owner in writing of the Architect's reasons for withholding certification in whole or in part as provided in Section 9.5.1.

§ 9.4.2 The issuance of a Certificate for Payment will constitute a representation by the Architect to the Owner, based on the Architect's evaluation of the Work and the data comprising the Application for Payment, that, to the best of the Architect's knowledge, information and belief, the Work has progressed to the point indicated and that the quality of the Work is in accordance with the Contract Documents. The foregoing representations are subject to an evaluation of the Work for conformance with the Contract Documents upon Substantial Completion, to results of subsequent tests and inspections, to correction of minor deviations from the Contract Documents prior to completion and to specific qualifications expressed by the Architect. The issuance of a Certificate for Payment will further constitute a representation that the Contractor is entitled to payment in the amount certified. However, the issuance of a Certificate for Payment will not be a representation that the Architect has (1) made exhaustive or continuous on-site inspections to check the quality or quantity of the Work, (2) reviewed construction means, methods, techniques, sequences or procedures, (3) reviewed copies of requisitions received from Subcontractors and material suppliers and other data requested by the Owner to substantiate the Contractor's right to payment, or (4) made examination to ascertain how or for what purpose the Contractor has used money previously paid on account of the Contract Sum.

§ 9.5 DECISIONS TO WITHHOLD CERTIFICATION

§ 9.5.1 The Architect may withhold a Certificate for Payment in whole or in part, to the extent reasonably necessary to protect the Owner, if in the Architect's opinion the representations to the Owner required by Section 9.4.2 cannot be made. If the Architect is unable to certify payment in the amount of the Application, the Architect will notify the Contractor and Owner as provided in Section 9.4.1. If the Contractor and Architect cannot agree on a revised amount, the Architect will promptly issue a Certificate for Payment for the amount for which the Architect is able to make such representations to the Owner. The Architect may also withhold a Certificate for Payment or, because of subsequently discovered evidence, may nullify the whole or a part of a Certificate for Payment previously issued, to such extent as may be necessary in the Architect's opinion to protect the Owner from loss for which the Contractor is responsible, including loss resulting from acts and omissions described in Section 3.3.2, because of

- **.1** defective Work not remedied;
- **.2** third party claims filed or reasonable evidence indicating probable filing of such claims unless security acceptable to the Owner is provided by the Contractor;
- **.3** failure of the Contractor to make payments properly to Subcontractors or for labor, materials or equipment;
- **.4** reasonable evidence that the Work cannot be completed for the unpaid balance of the Contract Sum;
- **.5** damage to the Owner or a separate contractor;
- **.6** reasonable evidence that the Work will not be completed within the Contract Time, and that the unpaid balance would not be adequate to cover actual or liquidated damages for the anticipated delay; or
- **.7** repeated failure to carry out the Work in accordance with the Contract Documents.
- **.8** failure to comply with obligations under the Contract.

§ 9.5.2 When the above reasons for withholding certification are removed, certification will be made for amounts previously withheld. The City reserves the right to determine payment made.

Init.
/
AIA Document A201™ – 2007. Copyright © 1911, 1915, 1918, 1925, 1937, 1951, 1958, 1961, 1963, 1966, 1970, 1976, 1987, 1997 and 2007 by The American Institute of Architects. All rights reserved. WARNING: This AIA® Document is protected by U.S. Copyright Law and International Treaties. Unauthorized reproduction or distribution of this AIA® Document, or any portion of it, may result in severe civil and criminal penalties, and will be prosecuted to the maximum extent possible under the law. This document was produced by AIA software at 14:20:30 on 03/31/2015 under Order No.6386580634_1 which expires on 08/14/2015, and is not for resale.
User Notes:
(1865697126)

§ 9.5.3 If the Architect withholds certification for payment under Section 9.5.1.3, the Owner may, at its sole option, issue joint checks to the Contractor and to any Subcontractor or material or equipment suppliers to whom the Contractor failed to make payment for Work properly performed or material or equipment suitably delivered. If the Owner makes payments by joint check, the Owner shall notify the Architect and the Architect will reflect such payment on the next Certificate for Payment.

§ 9.6 PROGRESS PAYMENTS

§ 9.6.1 After the Architect has issued a Certificate for Payment, the Owner shall make payment in the manner and within the time provided in the Contract Documents, and shall so notify the Architect.

§ 9.6.2 The Contractor ~~shall pay each Subcontractor no later than seven days after receipt of payment from the Owner the amount to which the Subcontractor is entitled, reflecting percentages actually retained from payments to the Contractor on account of the Subcontractor's portion of the Work. The Contractor shall, by appropriate agreement with each Subcontractor, require each Subcontractor to make payments to Sub-subcontractors in a similar manner.~~is obligated to take one of the two following actions within seven (7) days after receipt of amounts paid to the Contractor by the Owner for work performed by any subcontractor under this Agreement:

a. Pay the subcontractor for the proportionate share of the total payment received from the Owner attributable to the work performed by the subcontractor under this Agreement; or

b. Notify the Owner and the subcontractor, in writing, of the Contractor's intention to withhold all or a part of the subcontractor's payment with the reason for nonpayment.

The Contractor is obligated to pay interest to the subcontractor on all amounts owed by the Contractor to the subcontractor that remain unpaid after seven (7) days following receipt by the Contractor of payment from the Owner for work performed by the subcontractor under this Agreement. Unless otherwise provided under the terms of this Agreement, interest shall accrue at the rate of one percent (1%) per month.

The Contractor shall include in each of its subcontracts, if any are permitted, a provision requiring each subcontractor to include or otherwise be subject to the same payment and interest requirements with respect to each lower-tier subcontractor.

The Contractor's obligation to pay an interest charge to a subcontractor pursuant to this section may not be construed to be an obligation of the City. A contract modification or Amendment to the Agreement may not be made for the purpose of providing reimbursement for such interest charge. A cost reimbursement claim may not include any amount for reimbursement for such interest charge.

§ 9.6.3 ~~The Architect will, on request, furnish to a Subcontractor, if practicable, information regarding percentages of completion or amounts applied for by the Contractor and action taken thereon by the Architect and Owner on account of portions of the Work done by such Subcontractor.~~A Subcontractor inquiry for progress payment and other information shall be directed to the City Attorney's office under the Freedom of Information Act..

§ 9.6.4 The Owner has the right to request written evidence from the Contractor that the Contractor has properly paid Subcontractors and material and equipment suppliers amounts paid by the Owner to the Contractor for subcontracted Work. If the Contractor fails to furnish such evidence within seven days, the Owner shall have the right to contact Subcontractors to ascertain whether they have been properly paid. Neither the Owner nor Architect shall have an obligation to pay or to see to the payment of money to a Subcontractor, except as may otherwise be required by law.

§ 9.6.5 Contractor payments to material and equipment suppliers shall be treated in a manner similar to that provided in Sections 9.6.2, 9.6.3 and 9.6.4.

§ 9.6.6 A Certificate for Payment, a progress payment, or partial or entire use or occupancy of the Project by the Owner shall not constitute acceptance of Work not in accordance with the Contract Documents.

§ 9.6.7 Unless the Contractor provides the Owner with a payment bond in the full penal sum of the Contract Sum, payments received by the Contractor for Work properly performed by Subcontractors and suppliers shall be held by

Init.
/
AIA Document A201™ – 2007. Copyright © 1911, 1915, 1918, 1925, 1937, 1951, 1958, 1961, 1963, 1966, 1970, 1976, 1987, 1997 and 2007 by The American Institute of Architects. **All rights reserved.** WARNING: This AIA® Document is protected by U.S. Copyright Law and International Treaties. Unauthorized reproduction or distribution of this AIA® Document, or any portion of it, may result in severe civil and criminal penalties, and will be prosecuted to the maximum extent possible under the law. This document was produced by AIA software at 14:20:30 on 03/31/2015 under Order No.6386580634_1 which expires on 08/14/2015, and is not for resale.
User Notes: (1865697126)

the Contractor for those Subcontractors or suppliers who performed Work or furnished materials, or both, under contract with the Contractor for which payment was made by the Owner. Nothing contained herein shall require money to be placed in a separate account and not commingled with money of the Contractor, shall create any fiduciary liability or tort liability on the part of the Contractor for breach of trust or shall entitle any person or entity to an award of punitive damages against the Contractor for breach of the requirements of this provision.

§ 9.7 FAILURE OF PAYMENT

~~If the Architect does not issue a Certificate for Payment, through no fault of the Contractor, within seven days after receipt of the Contractor's Application for Payment, or if the Owner does not pay the Contractor within seven days after the date established in the Contract Documents the amount certified by the Architect or awarded by binding dispute resolution, then the Contractor may, upon seven additional days' written notice to the Owner and Architect, stop the Work until payment of the amount owing has been received. The Contract Time shall be extended appropriately and the Contract Sum shall be increased by the amount of the Contractor's reasonable costs of shut-down, delay and start-up, plus interest as provided for in the Contract Documents.~~. Intentionally Omitted.

§ 9.8 SUBSTANTIAL COMPLETION

§ 9.8.1 Substantial Completion is the stage in the progress of the Work when the Work or designated portion thereof is sufficiently complete in accordance with the Contract Documents so that the Owner can occupy or utilize the Work for its intended use.

§ 9.8.2 When the Contractor considers that the Work, or a portion thereof which the Owner agrees to accept separately, is substantially complete, the Contractor shall prepare and submit to the Architect a comprehensive list of items to be completed or corrected prior to final payment. Failure to include an item on such list does not alter the responsibility of the Contractor to complete all Work in accordance with the Contract Documents.

§ 9.8.3 Upon receipt of the Contractor's list, the Architect will make an inspection to determine whether the Work or designated portion thereof is substantially complete. If the Architect's inspection discloses any item, whether or not included on the Contractor's list, which is not sufficiently complete in accordance with the Contract Documents so that the Owner can occupy or utilize the Work or designated portion thereof for its intended use, the Contractor shall, before issuance of the Certificate of Substantial Completion, complete or correct such item upon notification by the Architect. In such case, the Contractor shall then submit a request for another inspection by the Architect to determine Substantial Completion.

§ 9.8.4 When the Work or designated portion thereof is substantially complete, the Architect will prepare a Certificate of Substantial Completion that shall establish the date of Substantial Completion, shall establish responsibilities of the Owner and Contractor for security, maintenance, heat, utilities, damage to the Work and insurance, and shall fix the time within which the Contractor shall finish all items on the list accompanying the Certificate. Warranties required by the Contract Documents shall commence on the date of Substantial Completion of the Work or designated portion thereof unless otherwise provided in the Certificate of Substantial Completion.

§ 9.8.5 The Certificate of Substantial Completion shall be submitted to the Owner and Contractor for their written acceptance of responsibilities assigned to them in such Certificate. Upon such acceptance and consent of surety, if any, the Owner shall make payment of retainage applying to such Work or designated portion thereof. Such payment shall be adjusted for Work that is incomplete or not in accordance with the requirements of the Contract Documents.

§ 9.9 PARTIAL OCCUPANCY OR USE

§ 9.9.1 The Owner may occupy or use any completed or partially completed portion of the Work at any stage when such portion is designated by separate agreement with the Contractor, provided such occupancy or use is consented to by the insurer as required under Section 11.3.1.5 and authorized by public authorities having jurisdiction over the Project. Such partial occupancy or use may commence whether or not the portion is substantially complete, provided the Owner and Contractor have accepted in writing the responsibilities assigned to each of them for payments, retainage, if any, security, maintenance, heat, utilities, damage to the Work and insurance, and have agreed in writing concerning the period for correction of the Work and commencement of warranties required by the Contract Documents. When the Contractor considers a portion substantially complete, the Contractor shall prepare and submit a list to the Architect as provided under Section 9.8.2. Consent of the Contractor to partial occupancy or use shall not be unreasonably withheld. The stage of the progress of the Work shall be determined by written agreement between the Owner and Contractor or, if no agreement is reached, by decision of the Architect.

AIA Document A201™ – 2007. Copyright © 1911, 1915, 1918, 1925, 1937, 1951, 1958, 1961, 1963, 1966, 1970, 1976, 1987, 1997 and 2007 by The American Institute of Architects. **All rights reserved.** WARNING: This AIA® Document is protected by U.S. Copyright Law and International Treaties. Unauthorized reproduction or distribution of this AIA® Document, or any portion of it, may result in severe civil and criminal penalties, and will be prosecuted to the maximum extent possible under the law. This document was produced by AIA software at 14:20:30 on 03/31/2015 under Order No.6386580634_1 which expires on 08/14/2015, and is not for resale.
User Notes: (1865697126)

§ **9.9.2** Immediately prior to such partial occupancy or use, the Owner, Contractor and Architect shall jointly inspect the area to be occupied or portion of the Work to be used in order to determine and record the condition of the Work.

§ **9.9.3** Unless otherwise agreed upon, partial occupancy or use of a portion or portions of the Work shall not constitute acceptance of Work not complying with the requirements of the Contract Documents.

§ 9.10 FINAL COMPLETION AND FINAL PAYMENT

§ **9.10.1** Upon receipt of the Contractor's written notice that the Work is ready for final inspection and acceptance and upon receipt of a final Application for Payment, the Architect will promptly make such inspection and, when the Architect finds the Work acceptable under the Contract Documents and the Contract fully performed, the Architect will promptly issue a final Certificate for Payment stating that to the best of the Architect's knowledge, information and belief, and on the basis of the Architect's on-site visits and inspections, the Work has been completed in accordance with terms and conditions of the Contract Documents and that the entire balance found to be due the Contractor and noted in the final Certificate is due and payable. The Architect's final Certificate for Payment will constitute a further representation that conditions listed in Section 9.10.2 as precedent to the Contractor's being entitled to final payment have been fulfilled.

§ **9.10.2** Neither final payment nor any remaining retained percentage shall become due until the Contractor submits to the Architect (1) an affidavit that payrolls, bills for materials and equipment, and other indebtedness connected with the Work for which the Owner or the Owner's property might be responsible or encumbered (less amounts withheld by Owner) have been paid or otherwise satisfied, (2) a certificate evidencing that insurance required by the Contract Documents to remain in force after final payment is currently in effect and will not be canceled or allowed to expire until at least 30 days' prior written notice has been given to the Owner, (3) a written statement that the Contractor knows of no substantial reason that the insurance will not be renewable to cover the period required by the Contract Documents, (4) consent of surety, if any, to final payment and (5), if required by the Owner, other data establishing payment or satisfaction of obligations, such as receipts, releases and waivers of liens, claims, security interests or encumbrances arising out of the Contract, to the extent and in such form as may be designated by the Owner. The Contractor shall submit a Contractor's release from liens, claims, security interests or encumbrances along with final invoice. If a Subcontractor refuses to furnish a release or waiver required by the Owner, the Contractor may furnish a bond satisfactory to the Owner to indemnify the Owner against such lien. If such lien remains unsatisfied after payments are made, the Contractor shall refund to the Owner all money that the Owner may be compelled to pay in discharging such lien, including all costs and reasonable attorneys' fees.

§ **9.10.3** If, after Substantial Completion of the Work, final completion thereof is materially delayed through no fault of the Contractor or by issuance of Change Orders affecting final completion, and the Architect so confirms, the Owner shall, upon application by the Contractor and certification by the Architect, and without terminating the Contract, make payment of the balance due for that portion of the Work fully completed and accepted. If the remaining balance for Work not fully completed or corrected is less than retainage stipulated in the Contract Documents, and if bonds have been furnished, the written consent of surety to payment of the balance due for that portion of the Work fully completed and accepted shall be submitted by the Contractor to the Architect prior to certification of such payment. Such payment shall be made under terms and conditions governing final payment, except that it shall not constitute a waiver of claims.

§ **9.10.4** The making of final payment shall constitute a waiver of Claims by the Owner except those arising from

- **.1** liens, Claims, security interests or encumbrances arising out of the Contract and unsettled;
- **.2** failure of the Work to comply with the requirements of the Contract Documents; or
- **.3** terms of special warranties required by the Contract Documents.

§ **9.10.5** Acceptance of final payment by the Contractor, a Subcontractor or material supplier shall constitute a waiver of claims by that payee except those previously made in writing and identified by that payee as unsettled at the time of final Application for Payment.

AIA Document A201™ – 2007. Copyright © 1911, 1915, 1918, 1925, 1937, 1951, 1958, 1961, 1963, 1966, 1970, 1976, 1987, 1997 and 2007 by The American Institute of Architects. **All rights reserved.** WARNING: This AIA® Document is protected by U.S. Copyright Law and International Treaties. Unauthorized reproduction or distribution of this AIA® Document, or any portion of it, may result in severe civil and criminal penalties, and will be prosecuted to the maximum extent possible under the law. This document was produced by AIA software at 14:20:30 on 03/31/2015 under Order No.6386580634_1 which expires on 08/14/2015, and is not for resale.
User Notes: (1865697126)

ARTICLE 10 PROTECTION OF PERSONS AND PROPERTY

§ 10.1 SAFETY PRECAUTIONS AND PROGRAMS

The Contractor shall be solely responsible for initiating, maintaining and supervising all safety precautions and programs in connection with the performance of the Contract.

§ 10.2 SAFETY OF PERSONS AND PROPERTY

§ 10.2.1 The Contractor shall take reasonable precautions for safety of, and shall provide reasonable protection to prevent damage, injury or loss to

- .1 employees on the Work and other persons who may be affected thereby;
- .2 the Work and materials and equipment to be incorporated therein, whether in storage on or off the site, under care, custody or control of the Contractor or the Contractor's Subcontractors or Sub-subcontractors; and
- .3 other property at the site or adjacent thereto, such as trees, shrubs, lawns, walks, pavements, roadways, structures and utilities not designated for removal, relocation or replacement in the course of construction. The Contractor shall provide temporary fences, barricades, coverings, or other protection to preserve existing items indicated to remain and to prevent injury or damage to persons or property.

This includes providing protection of the Work, materials, appliances and fixtures against weather, rain, wind, storms, freezing or heat. At the end of the day's work, work likely to be damaged shall be properly protected. For work on existing buildings, the Contractor shall accomplish the work in such a manner that the remainder of the building, and its contents and inhabitants, are fully protected from any weather damage.

The Contractor shall be responsible for ensuring that adequate measures are taken to secure materials and equipment during the progress of the Work to prevent storm-related hazards. It is, therefore, essential that the Contractor take necessary precautions to ensure that openings in the building are monitored carefully. The Contractor shall take immediate actions required to seal of such openings when rain or other detrimental weather is imminent, and at the end of each workday; and ensure that the openings are completely sealed off to protect materials and equipment in the building from damage.

The provisions of this subparagraph take precedence over any similar provisions contained in the technical specifications.

§ 10.2.2 The Contractor shall comply with and give notices required by applicable laws, statutes, ordinances, codes, rules and regulations, and lawful orders of public authorities bearing on safety of persons or property or their protection from damage, injury or loss.

§ 10.2.3 The Contractor shall erect and maintain, as required by existing conditions and performance of the Contract, reasonable safeguards for safety and protection, including posting danger signs and other warnings against hazards, promulgating safety regulations and notifying owners and users of adjacent sites and utilities.

§ 10.2.4 When use or storage of explosives or other hazardous materials or equipment or unusual methods are necessary for execution of the Work, the Contractor shall exercise utmost care and carry on such activities under supervision of properly qualified personnel.

§ 10.2.5 The Contractor shall promptly remedy damage and loss (other than damage or loss insured under property insurance required by the Contract Documents) to property referred to in Sections 10.2.1.2 and 10.2.1.3 caused in whole or in part by the Contractor, a Subcontractor, a Sub-subcontractor, or anyone directly or indirectly employed by any of them, or by anyone for whose acts they may be liable and for which the Contractor is responsible under Sections 10.2.1.2 and 10.2.1.3, except damage or loss attributable to acts or omissions of the Owner or Architect or anyone directly or indirectly employed by either of them, or by anyone for whose acts either of them may be liable, and not attributable to the fault or negligence of the Contractor. The foregoing obligations of the Contractor are in addition to the Contractor's obligations under Section 3.18.

§ 10.2.6 The Contractor shall designate a responsible member of the Contractor's organization at the site whose duty shall be the prevention of accidents. This person shall be the Contractor's superintendent unless otherwise designated by the Contractor in writing to the Owner and Architect.

AIA Document A201™ – 2007. Copyright © 1911, 1915, 1918, 1925, 1937, 1951, 1958, 1961, 1963, 1966, 1970, 1976, 1987, 1997 and 2007 by The American Institute of Architects. All rights reserved. WARNING: This AIA® Document is protected by U.S. Copyright Law and International Treaties. Unauthorized reproduction or distribution of this AIA® Document, or any portion of it, may result in severe civil and criminal penalties, and will be prosecuted to the maximum extent possible under the law. This document was produced by AIA software at 14:20:30 on 03/31/2015 under Order No.6386580634_1 which expires on 08/14/2015, and is not for resale.
User Notes:

(1865697126)

§ **10.2.7** The Contractor shall not permit any part of the construction or site to be loaded so as to cause damage or create an unsafe condition.

§ 10.2.8 INJURY OR DAMAGE TO PERSON OR PROPERTY
If either party suffers injury or damage to person or property because of an act or omission of the other party, or of others for whose acts such party is legally responsible, written notice of such injury or damage, whether or not insured, shall be given to the other party within a reasonable time not exceeding 21 days after discovery. The notice shall provide sufficient detail to enable the other party to investigate the matter.

§ 10.3 HAZARDOUS MATERIALS
§ **10.3.1** The Contractor is responsible for compliance with any requirements included in the Contract Documents regarding hazardous materials. If the Contractor encounters a hazardous material or substance not addressed in the Contract Documents and if reasonable precautions will be inadequate to prevent foreseeable bodily injury or death to persons resulting from a material or substance, including but not limited to asbestos or polychlorinated biphenyl (PCB), encountered on the site by the Contractor, the Contractor shall, upon recognizing the condition, immediately stop Work in the affected area and report the condition to the Owner and Architect in writing.

§ **10.3.2** Upon receipt of the Contractor's written notice, the Owner shall obtain the services of a licensed laboratory to verify the presence or absence of the material or substance reported by the Contractor and, in the event such material or substance is found to be present, to cause it to be rendered harmless. Unless otherwise required by the Contract Documents, the Owner shall furnish in writing to the Contractor and Architect the names and qualifications of persons or entities who are to perform tests verifying the presence or absence of such material or substance or who are to perform the task of removal or safe containment of such material or substance. The Contractor and the Architect will promptly reply to the Owner in writing stating whether or not either has reasonable objection to the persons or entities proposed by the ~~Owner. If either the Contractor or Architect has an objection to a person or entity proposed by the Owner, the Owner shall propose another to whom the Contractor and the Architect have no reasonable objection.~~ Owner.. When the material or substance has been rendered harmless, Work in the affected area shall resume upon written ~~agreement of the Owner~~ direction by the City and Contractor. By Change Order, the Contract Time shall be extended appropriately and the Contract Sum shall be increased in the amount of the Contractor's reasonable additional costs of shut-down, delay and start-up.

~~§ 10.3.3 To the fullest extent permitted by law, the Owner shall indemnify and hold harmless the Contractor, Subcontractors, Architect, Architect's consultants and agents and employees of any of them from and against claims, damages, losses and expenses, including but not limited to attorneys' fees, arising out of or resulting from performance of the Work in the affected area if in fact the material or substance presents the risk of bodily injury or death as described in Section 10.3.1 and has not been rendered harmless, provided that such claim, damage, loss or expense is attributable to bodily injury, sickness, disease or death, or to injury to or destruction of tangible property (other than the Work itself), except to the extent that such damage, loss or expense is due to the fault or negligence of the party seeking indemnity.~~

§ 10.3.3. Intentionally Omitted.

§ **10.3.4** The Owner shall not be responsible under this Section 10.3 for materials or substances the Contractor brings to the ~~site unless such materials or substances are required by the Contract Documents.~~ site. The Owner shall be responsible for materials or substances required by the Contract Documents, except to the extent of the Contractor's fault or negligence in the use and handling of such materials or substances.

§ **10.3.5** The Contractor shall indemnify the Owner for the cost and expense the Owner incurs (1) for remediation of a material or substance the Contractor brings to the site and negligently handles, or (2) where the Contractor fails to perform its obligations under Section 10.3.1, except to the extent that the cost and expense are due to the Owner's fault or negligence.

§ **10.3.6** If, without negligence on the part of the Contractor, the Contractor is held liable by a government agency for the cost of remediation of a hazardous material or substance solely by reason of performing Work as required by the Contract Documents, the Owner shall indemnify the Contractor for all cost and expense thereby incurred.

AIA Document A201™ – 2007. Copyright © 1911, 1915, 1918, 1925, 1937, 1951, 1958, 1961, 1963, 1966, 1970, 1976, 1987, 1997 and 2007 by The American Institute of Architects. **All rights reserved.** WARNING: This AIA® Document is protected by U.S. Copyright Law and International Treaties. Unauthorized reproduction or distribution of this AIA® Document, or any portion of it, may result in severe civil and criminal penalties, and will be prosecuted to the maximum extent possible under the law. This document was produced by AIA software at 14:20:30 on 03/31/2015 under Order No.6386580634_1 which expires on 08/14/2015, and is not for resale.
User Notes: (1865697126)

§ 10.4 EMERGENCIES
In an emergency affecting safety of persons or property, the Contractor shall act, at the Contractor's discretion, to prevent threatened damage, injury or loss. Additional compensation or extension of time claimed by the Contractor on account of an emergency shall be determined as provided in Article 15 and Article 7.

§ 10.4.1 EMERGENCY CONDITIONS. The issuance of a Declaration of Emergency conditions by any authorized government official may result in the suspension of the Work under the Contract and/or the ordering by the City of additional work. The Contractor shall make available to the City, during the time of the declared emergency, labor and equipment for such services under the terms and conditions of the Contract. Labor and equipment rates shall not exceed FEMA reimbursable rates for the Hampton Roads area. Failure to comply with such emergency directives may result in termination of the Contract by reason of non-compliance.

ARTICLE 11 INSURANCE AND BONDS
§ 11.1 CONTRACTOR'S LIABILITY INSURANCE

See Subparagraphs 3.18.1 and 10.3.1

§ 11.1.1 The Contractor shall purchase from and maintain in a company or companies lawfully authorized to do business in the jurisdiction in which the Project is located such insurance as will protect the Contractor from claims set forth below which may arise out of or result from the Contractor's operations and completed operations under the Contract and for which the Contractor may be legally liable, whether such operations be by the Contractor or by a Subcontractor or by anyone directly or indirectly employed by any of them, or by anyone for whose acts any of them may be liable:

- .1 Claims under workers' compensation, disability benefit and other similar employee benefit acts that are applicable to the Work to be performed;
- .2 Claims for damages because of bodily injury, occupational sickness or disease, or death of the Contractor's employees;
- .3 Claims for damages because of bodily injury, sickness or disease, or death of any person other than the Contractor's employees;
- .4 Claims for damages insured by usual personal injury liability coverage;
- .5 Claims for damages, other than to the Work itself, because of injury to or destruction of tangible property, including loss of use resulting therefrom;
- .6 Claims for damages because of bodily injury, death of a person or property damage arising out of ownership, maintenance or use of a motor vehicle;
- .7 Claims for bodily injury or property damage arising out of completed operations; and
- .8 Claims involving contractual liability insurance applicable to the Contractor's obligations under Section 3.18.

§ 11.1.2 ~~The insurance required by Section 11.1.1 shall be written for not less than limits of liability~~ All liability policies shall be written in an occurrence form unless otherwise specifically approved by the City.

The Contractor shall secure and maintain in force insurance, including malicious mischief and vandalism, with minimum acceptable amounts described below, naming the City as additional insured during the life of the Contract:

.1	Worker's Compensation	Statutory
	Employer's Liability	$200,000 per accident injury
.2	Commercial General Liability	Combined single limit $3,000,000 or
		$2,000,000 per occurrence
		$3,000,000 aggregate
		$3,000,000 products & completed
		Operations

The Commercial General Liability Insurance required above shall include the following extensions of coverage:

AIA Document A201™ – 2007. Copyright © 1911, 1915, 1918, 1925, 1937, 1951, 1958, 1961, 1963, 1966, 1970, 1976, 1987, 1997 and 2007 by The American Institute of Architects. All rights reserved. WARNING: This AIA® Document is protected by U.S. Copyright Law and International Treaties. Unauthorized reproduction or distribution of this AIA® Document, or any portion of it, may result in severe civil and criminal penalties, and will be prosecuted to the maximum extent possible under the law. This document was produced by AIA software at 14:20:30 on 03/31/2015 under Order No.6386580634_1 which expires on 08/14/2015, and is not for resale.
User Notes: (1865697126)

(1) The coverage shall be provided under a Comprehensive form of policy or similar thereto.
(2) X.C.U. Coverage – If the Contract requires any work procedures involving blasting, excavating, tunneling or other underground work, the liability coverage shall include Standard Blasting or Explosion Coverage, Standard Collapse Coverage and Standard Underground Coverage, commonly referred to as XCU liability coverage with limits of $500,000 per occurrence and $1,000,000 aggregate.
(3) Broad Form Property Damage Endorsement.
(4) Contractual Liability coverage shall be included.
(5) Protective Liability coverage shall be included to protect the Contractor against claims arising out of operations performed by its Subcontractors.
(6) Products Liability and/or Completed Operations coverage shall be included.

.3 Comprehensive Automobile Liability including owned, non-owned and hired vehicles:

Combined Single limit each accident	$2,000,000
Bodily Injured	$1,000,000 per person
	$2,000,000 per occurrence
	$2,000,000 aggregate
Property Damage	$500,000 per occurrence

.4 Environmental Impairment Liability Insurance. If applicable, as determined by the City, the Contractor shall procure and maintain during the life of the Contract Environmental Impairment Liability Insurance, which shall protect against all claims and costs including, but not limited to, bodily injury or property damage claims (including clean-up costs) caused by pollution conditions, as herein defined, arising from the contracted work. Pollution conditions means the discharge, dispersal, release or escape of smoke vapor, soot, fumes, acids, alkalis, toxic chemicals, liquids, gases, waste materials or other irritants, contaminants, or pollutants into or upon land, the atmosphere or any watercourse or body of water, which results in bodily injury or property damage. The policy limits will be determined by the City and specified in the Contract Documents or ~~required by law, whichever coverage is greater. Coverages, whether written on an occurrence or~~ as prescribed by City, State or Federal law/regulations. Coverages, written on a claims-made basis, shall be maintained without interruption from the date of commencement of the Work until at least one year following the date of final payment and ~~termination of any coverage required to be maintained after final payment, and,~~ with respect to the Contractor's completed operations coverage, until the expiration of the period for correction of Work or for such other period for maintenance of completed operations coverage as specified in the Contract Documents.

§ 11.1.3 ~~Certificates of insurance acceptable to the Owner shall be filed with the Owner prior to commencement of the Work and thereafter upon renewal or replacement of each required policy of insurance. These certificates and the insurance policies required by this Section 11.1 shall contain a provision that coverages afforded under the policies will not be canceled or allowed to expire until at least 30 days' prior written notice has been given to the Owner. An additional certificate evidencing continuation of liability coverage, including coverage for completed operations, shall be submitted with the final Application for Payment as required by Section 9.10.2 and thereafter upon renewal or replacement of such coverage until the expiration of the time required by Section 11.1.2. Information concerning reduction of coverage on account of revised limits or claims paid under the General Aggregate, or both, shall be furnished by the Contractor with reasonable promptness.~~All insurance policies required hereunder shall contain an express provision therein, or endorsement attached thereto, worded substantially as follows:

"This is not to be cancelled or become subject to reduction of coverage prior to thirty days after the insured has received written notice mailed to the address noted hereinbefore, as evidenced by return receipt of registered letter."

All insurance certificates and/or policies shall designate the City of Norfolk, its employees, and its agents as "additional insured" regarding the contracted Work.

AIA Document A201™ – 2007. Copyright © 1911, 1915, 1918, 1925, 1937, 1951, 1958, 1961, 1963, 1966, 1970, 1976, 1987, 1997 and 2007 by The American Institute of Architects. All rights reserved. WARNING: This AIA® Document is protected by U.S. Copyright Law and International Treaties. Unauthorized reproduction or distribution of this AIA® Document, or any portion of it, may result in severe civil and criminal penalties, and will be prosecuted to the maximum extent possible under the law. This document was produced by AIA software at 14:20:30 on 03/31/2015 under Order No.6386580634_1 which expires on 08/14/2015, and is not for resale.
User Notes: (1865697126)

Certificates of Insurance issued by companies licensed within the Commonwealth of Virginia shall provide the designed insurance.

Contractor shall notify the City in writing within 10 days after receiving notice of any cancellation or reduction in coverage.

.

§ 11.1.4 ~~The Contractor shall cause the commercial liability coverage required by the Contract Documents to include (1) the Owner, the Architect and the Architect's consultants as additional insureds for claims caused in whole or in part by the Contractor's negligent acts or omissions during the Contractor's operations; and (2) the Owner as an additional insured for claims caused in whole or in part by the Contractor's negligent acts or omissions during the Contractor's completed operations.~~**SUBCONTRACTOR'S INSURANCE.** The Contractor shall require all subcontractors to secure and maintain in force containing the same coverage and amounts as described in Subparagraph 11.1.2.

§ 11.2 OWNER'S LIABILITY INSURANCE

~~The Owner shall be responsible for purchasing and maintaining the Owner's usual liability insurance.~~. Intentionally Omitted.

§ 11.3 PROPERTY INSURANCE

§ 11.3.1 ~~Unless otherwise provided, the Owner shall purchase and maintain, in a company or companies lawfully authorized to do business in the jurisdiction in which the Project is located, property insurance written on a builder's risk "all-risk" or equivalent policy form in the amount of the initial Contract Sum, plus value of subsequent Contract Modifications and cost of materials supplied or installed by others, comprising total value for the entire Project at the site on a replacement cost basis without optional deductibles. Such property insurance shall be maintained, unless otherwise provided in the Contract Documents or otherwise agreed in writing by all persons and entities who are beneficiaries of such insurance, until final payment has been made as provided in Section 9.10 or until no person or entity other than the Owner has an insurable interest in the property required by this Section 11.3 to be covered, whichever is later. This insurance shall include interests of the Owner, the Contractor, Subcontractors and Sub-subcontractors in the Project.~~Until the work is completed and accepted by the City, the Contractor shall purchase and maintain a Builder's Risk or property insurance as is appropriate upon the entire work at the Site to the full insurable value thereof.

~~§ 11.3.1.1 Property insurance shall be on an "all-risk" or equivalent policy form and shall include, without limitation, insurance against the perils of fire (with extended coverage) and physical loss or damage including, without duplication of coverage, theft, vandalism, malicious mischief, collapse, earthquake, flood, windstorm, falsework, testing and startup, temporary buildings and debris removal including demolition occasioned by enforcement of any applicable legal requirements, and shall cover reasonable compensation for Architect's and Contractor's services and expenses required as a result of such insured loss.~~

~~§ 11.3.1.2 If the Owner does not intend to purchase such property insurance required by the Contract and with all of the coverages in the amount described above, the Owner shall so inform the Contractor in writing prior to commencement of the Work. The Contractor may then effect insurance that will protect the interests of the Contractor, Subcontractors and Sub-subcontractors in the Work, and by appropriate Change Order the cost thereof shall be charged to the Owner. If the Contractor is damaged by the failure or neglect of the Owner to purchase or maintain insurance as described above, without so notifying the Contractor in writing, then the Owner shall bear all reasonable costs properly attributable thereto.~~

~~§ 11.3.1.3 If the property insurance requires deductibles, the Owner shall pay costs not covered because of such deductibles.~~

~~§ 11.3.1.4 This property insurance shall cover portions of the Work stored off the site, and also portions of the Work in transit.~~

~~§ 11.3.1.5 Partial occupancy or use in accordance with Section 9.9 shall not commence until the insurance company or companies providing property insurance have consented to such partial occupancy or use by endorsement or~~

Init.
/
AIA Document A201™ – 2007. Copyright © 1911, 1915, 1918, 1925, 1937, 1951, 1958, 1961, 1963, 1966, 1970, 1976, 1987, 1997 and 2007 by The American Institute of Architects. All rights reserved. WARNING: This AIA® Document is protected by U.S. Copyright Law and International Treaties. Unauthorized reproduction or distribution of this AIA® Document, or any portion of it, may result in severe civil and criminal penalties, and will be prosecuted to the maximum extent possible under the law. This document was produced by AIA software at 14:20:30 on 03/31/2015 under Order No.6386580634_1 which expires on 08/14/2015, and is not for resale.
User Notes: (1865697126)

~~otherwise. The Owner and the Contractor shall take reasonable steps to obtain consent of the insurance company or companies and shall, without mutual written consent, take no action with respect to partial occupancy or use that would cause cancellation, lapse or reduction of insurance.~~

§ 11.3.1.1. Intentionally Omitted.

§ 11.3.1.2. Intentionally Omitted.

§ 11.3.1.3. Intentionally Omitted.

§ 11.3.1.4. Intentionally Omitted.

§ 11.3.1.5. Intentionally Omitted.

§ 11.3.2 BOILER AND MACHINERY INSURANCE

~~The Owner shall purchase and maintain boiler and machinery insurance required by the Contract Documents or by law, which shall specifically cover such insured objects during installation and until final acceptance by the Owner; this insurance shall include interests of the Owner, Contractor, Subcontractors and Sub-subcontractors in the Work, and the Owner and Contractor shall be named insureds.~~. Intentionally Omitted.

§ 11.3.3 LOSS OF USE INSURANCE

The Owner, at the Owner's option, may purchase and maintain such insurance as will insure the Owner against loss of use of the Owner's property due to fire or other hazards, however caused. The Owner waives all rights of action against the Contractor for loss of use of the Owner's property, including consequential losses due to fire or other hazards however caused.

§ 11.3.4 If the Contractor requests in writing that insurance for risks other than those described herein or other special causes of loss be included in the property insurance policy, the Owner shall, if possible, include such insurance, and the cost thereof shall be charged to the Contractor by appropriate Change Order.

§ 11.3.5 If during the Project construction period the Owner insures properties, real or personal or both, at or adjacent to the site by property insurance under policies separate from those insuring the Project, or if after final payment property insurance is to be provided on the completed Project through a policy or policies other than those insuring the Project during the construction period, the Owner shall waive all rights in accordance with the terms of Section 11.3.7 for damages caused by fire or other causes of loss covered by this separate property insurance. All separate policies shall provide this waiver of subrogation by endorsement or otherwise.

§ 11.3.6 Before an exposure to loss may occur, the Owner shall file with the Contractor a copy of each policy that includes insurance coverages required by this Section 11.3. Each policy shall contain all generally applicable conditions, definitions, exclusions and endorsements related to this Project. Each policy shall contain a provision that the policy will not be canceled or allowed to expire, and that its limits will not be reduced, until at least 30 days' prior written notice has been given to the Contractor.

§ 11.3.7 WAIVERS OF SUBROGATION

The Owner and Contractor waive all rights against (1) each other and any of their subcontractors, sub-subcontractors, agents and employees, each of the other, and (2) the Architect, Architect's consultants, separate contractors described in Article 6, if any, and any of their subcontractors, sub-subcontractors, agents and employees, for damages caused by fire or other causes of loss to the extent covered by property insurance obtained pursuant to this Section 11.3 or other property insurance applicable to the Work, except such rights as they have to proceeds of such insurance held by the Owner as fiduciary. The Owner or Contractor, as appropriate, shall require of the Architect, Architect's consultants, separate contractors described in Article 6, if any, and the subcontractors, sub-subcontractors, agents and employees of any of them, by appropriate agreements, written where legally required for validity, similar waivers each in favor of other parties enumerated herein. The policies shall provide such waivers of subrogation by endorsement or otherwise. A waiver of subrogation shall be effective as to a person or entity even though that person or entity would otherwise have a duty of indemnification, contractual or otherwise, did not pay the insurance premium directly or indirectly, and whether or not the person or entity had an insurable interest in the property damaged.

AIA Document A201™ – 2007. Copyright © 1911, 1915, 1918, 1925, 1937, 1951, 1958, 1961, 1963, 1966, 1970, 1976, 1987, 1997 and 2007 by The American Institute of Architects. **All rights reserved.** WARNING: This AIA® Document is protected by U.S. Copyright Law and International Treaties. Unauthorized reproduction or distribution of this AIA® Document, or any portion of it, may result in severe civil and criminal penalties, and will be prosecuted to the maximum extent possible under the law. This document was produced by AIA software at 14:20:30 on 03/31/2015 under Order No.6386580634_1 which expires on 08/14/2015, and is not for resale.
User Notes: (1865697126)

§ 11.3.8 A loss insured under the Owner's property insurance shall be adjusted by the Owner as fiduciary and made payable to the Owner as fiduciary for the insureds, as their interests may appear, subject to requirements of any applicable mortgagee clause and of Section 11.3.10. The Contractor shall pay Subcontractors their just shares of insurance proceeds received by the Contractor, and by appropriate agreements, written where legally required for validity, shall require Subcontractors to make payments to their Sub-subcontractors in similar manner.

§ 11.3.9 If required in writing by a party in interest, the Owner as fiduciary shall, upon occurrence of an insured loss, give bond for proper performance of the Owner's duties. The cost of required bonds shall be charged against proceeds received as fiduciary. The Owner shall deposit in a separate account proceeds so received, which the Owner shall distribute in accordance with such agreement as the parties in interest may reach, or as determined in accordance with the method of binding dispute resolution selected in the Agreement between the Owner and Contractor. If after such loss no other special agreement is made and unless the Owner terminates the Contract for convenience, replacement of damaged property shall be performed by the Contractor after notification of a Change in the Work in accordance with Article 7.

§ 11.3.10 The Owner as fiduciary shall have power to adjust and settle a loss with insurers unless one of the parties in interest shall object in writing within five days after occurrence of loss to the Owner's exercise of this power; if such objection is made, the dispute shall be resolved in the manner selected by the Owner and Contractor as the method of binding dispute resolution in the Agreement. If the Owner and Contractor have selected arbitration as the method of binding dispute resolution, the Owner as fiduciary shall make settlement with insurers or, in the case of a dispute over distribution of insurance proceeds, in accordance with the directions of the arbitrators.

§ 11.4 PERFORMANCE BOND AND PAYMENT BOND

§ 11.4.1 The Owner shall have the right to require the Contractor to furnish bonds covering faithful performance of the Contract and payment of obligations arising thereunder as stipulated in bidding requirements or specifically required in the Contract Documents on the date of execution of the Contract.

§ 11.4.2 Upon the request of any person or entity appearing to be a potential beneficiary of bonds covering payment of obligations arising under the Contract, the Contractor shall promptly furnish a copy of the bonds or shall authorize a copy to be furnished. A Performance Bond and Payment Bond Rider is required for all Change Orders that are in the amount of $100,000 or greater; or, if the aggregate total of multiple Change Orders is equal to or greater than $100,000.

ARTICLE 12 UNCOVERING AND CORRECTION OF WORK

§ 12.1 UNCOVERING OF WORK

§ 12.1.1 If a portion of the Work is covered contrary to the Architect's request or to requirements specifically expressed in the Contract Documents, it must, if requested in writing by the Architect, be uncovered for the Architect's examination and be replaced at the Contractor's expense without change in the Contract Time.

§ 12.1.2 If a portion of the Work has been covered that the Architect has not specifically requested to examine prior to its being covered, the Architect may request to see such Work and it shall be uncovered by the Contractor. If such Work is in accordance with the Contract Documents, costs of uncovering and replacement shall, by appropriate Change Order, be at the Owner's expense. If such Work is not in accordance with the Contract Documents, such costs and the cost of correction shall be at the Contractor's expense unless the condition was caused by the Owner or a separate contractor in which event the Owner shall be responsible for payment of such costs.

§ 12.2 CORRECTION OF WORK

§ 12.2.1 BEFORE OR AFTER SUBSTANTIAL COMPLETION

The Contractor shall promptly correct Work rejected by the Architect or failing to conform to the requirements of the Contract Documents, whether discovered before or after Substantial Completion and whether or not fabricated, installed or completed. Costs of correcting such rejected Work, including additional testing and inspections, the cost of uncovering and replacement, and compensation for the Architect's services and expenses made necessary thereby, shall be at the Contractor's expense.

AIA Document A201™ – 2007. Copyright © 1911, 1915, 1918, 1925, 1937, 1951, 1958, 1961, 1963, 1966, 1970, 1976, 1987, 1997 and 2007 by The American Institute of Architects. All rights reserved. WARNING: This AIA® Document is protected by U.S. Copyright Law and International Treaties. Unauthorized reproduction or distribution of this AIA® Document, or any portion of it, may result in severe civil and criminal penalties, and will be prosecuted to the maximum extent possible under the law. This document was produced by AIA software at 14:20:30 on 03/31/2015 under Order No.6386580634_1 which expires on 08/14/2015, and is not for resale.
User Notes: (1865697126)

§ 12.2.2 AFTER SUBSTANTIAL COMPLETION

§ 12.2.2.1 In addition to the Contractor's obligations under Section 3.5, if, within one year after the date of Substantial Completion of the Work or designated portion thereof or after the date for commencement of warranties established under Section 9.9.1, or by terms of an applicable special warranty required by the Contract Documents, any of the Work is found to be not in accordance with the requirements of the Contract Documents, the Contractor shall correct it promptly after receipt of written notice from the Owner to do so unless the Owner has previously given the Contractor a written acceptance of such condition. The Owner shall give such notice promptly after discovery of the condition. During the one-year period for correction of Work, if the Owner fails to notify the Contractor and give the Contractor an opportunity to make the correction, the Owner waives the rights to require correction by the Contractor and to make a claim for breach of warranty. If the Contractor fails to correct nonconforming Work within a reasonable time during that period after receipt of notice from the Owner or Architect, the Owner may correct it in accordance with Section 2.4.

§ 12.2.2.2 The one-year period for correction of Work shall be extended with respect to portions of Work first performed after Substantial Completion by the period of time between Substantial Completion and the actual completion of that portion of the Work.

~~**§ 12.2.2.3** The one-year period for correction of Work shall not be extended by corrective Work performed by the Contractor pursuant to this Section 12.2.~~

§ 12.2.2.3. Intentionally Omitted.

§ 12.2.3 The Contractor shall remove from the site portions of the Work that are not in accordance with the requirements of the Contract Documents and are neither corrected by the Contractor nor accepted by the Owner.

§ 12.2.4 The Contractor shall bear the cost of correcting destroyed or damaged construction, whether completed or partially completed, of the Owner or separate contractors caused by the Contractor's correction or removal of Work that is not in accordance with the requirements of the Contract Documents.

§ 12.2.5 Nothing contained in this Section 12.2 shall be construed to establish a period of limitation with respect to other obligations the Contractor has under the Contract Documents. Establishment of the one-year period for correction of Work as described in Section 12.2.2 relates only to the specific obligation of the Contractor to correct the Work, and has no relationship to the time within which the obligation to comply with the Contract Documents may be sought to be enforced, nor to the time within which proceedings may be commenced to establish the Contractor's liability with respect to the Contractor's obligations other than specifically to correct the Work.

§ 12.3 ACCEPTANCE OF NONCONFORMING WORK

If the Owner prefers to accept Work that is not in accordance with the requirements of the Contract Documents, the Owner may do so instead of requiring its removal and correction, in which case the Contract Sum will be reduced as appropriate and equitable. Such adjustment shall be effected whether or not final payment has been made.

ARTICLE 13 MISCELLANEOUS PROVISIONS

§ 13.1 GOVERNING LAW

The Contract shall be governed by the law of the place where the Project is located except that, if the parties have selected arbitration as the method of binding dispute resolution, the Federal Arbitration Act shall govern Section 15.4.

§ 13.2 SUCCESSORS AND ASSIGNS

§ 13.2.1 The Owner and Contractor respectively bind themselves, their partners, successors, assigns and legal representatives to covenants, agreements and obligations contained in the Contract Documents. Except as provided in Section 13.2.2, neither party to the Contract shall assign the Contract as a whole without written consent of the other. If either party attempts to make such an assignment without such consent, that party shall nevertheless remain legally responsible for all obligations under the Contract.

§ 13.2.2 The Owner may, without consent of the Contractor, assign the Contract to a lender providing construction financing for the Project, if the lender assumes the Owner's rights and obligations under the Contract Documents. The Contractor shall execute all consents reasonably required to facilitate such assignment.

AIA Document A201™ – 2007. Copyright © 1911, 1915, 1918, 1925, 1937, 1951, 1958, 1961, 1963, 1966, 1970, 1976, 1987, 1997 and 2007 by The American Institute of Architects. All rights reserved. WARNING: This AIA® Document is protected by U.S. Copyright Law and International Treaties. Unauthorized reproduction or distribution of this AIA® Document, or any portion of it, may result in severe civil and criminal penalties, and will be prosecuted to the maximum extent possible under the law. This document was produced by AIA software at 14:20:30 on 03/31/2015 under Order No.6386580634_1 which expires on 08/14/2015, and is not for resale.
User Notes:

(1865697126)

§ 13.3 WRITTEN NOTICE

Written notice shall be deemed to have been duly served if delivered in person to the individual, to a member of the firm or entity, or to an officer of the corporation for which it was intended; or if delivered at, or sent by registered or certified mail or by courier service providing proof of delivery to, the last business address known to the party giving notice.

§ 13.4 RIGHTS AND REMEDIES

§ 13.4.1 Duties and obligations imposed by the Contract Documents and rights and remedies available thereunder shall be in addition to and not a limitation of duties, obligations, rights and remedies otherwise imposed or available by law.

§ 13.4.2 No action or failure to act by the Owner, Architect or Contractor shall constitute a waiver of a right or duty afforded them under the Contract, nor shall such action or failure to act constitute approval of or acquiescence in a breach there under, except as may be specifically agreed in writing.

§ 13.5 TESTS AND INSPECTIONS

§ 13.5.1 Tests, inspections and approvals of portions of the Work shall be made as required by the Contract Documents and by applicable laws, statutes, ordinances, codes, rules and regulations or lawful orders of public authorities. Unless otherwise provided, the Contractor shall make arrangements for such tests, inspections and approvals with an independent testing laboratory or entity acceptable to the Owner, or with the appropriate public authority, and shall bear all related costs of tests, inspections and approvals. The Contractor shall give the Architect timely notice of when and where tests and inspections are to be made so that the Architect may be present for such procedures. The Owner shall bear costs of (1) tests, inspections or approvals that do not become requirements until after bids are received or negotiations concluded, and (2) tests, inspections or approvals where building codes or applicable laws or regulations prohibit the Owner from delegating their cost to the Contractor.

§ 13.5.2 If the Architect, Owner or public authorities having jurisdiction determine that portions of the Work require additional testing, inspection or approval not included under Section 13.5.1, the Architect will, upon written authorization from the Owner, instruct the Contractor to make arrangements for such additional testing, inspection or approval by an entity acceptable to the Owner, and the Contractor shall give timely notice to the Architect of when and where tests and inspections are to be made so that the Architect may be present for such procedures. Such costs, except as provided in Section 13.5.3, shall be at the Owner's expense.

§ 13.5.3 If such procedures for testing, inspection or approval under Sections 13.5.1 and 13.5.2 reveal failure of the portions of the Work to comply with requirements established by the Contract Documents, all costs made necessary by such failure including those of repeated procedures and compensation for the Architect's services and expenses shall be at the Contractor's expense.

§ 13.5.4 Required certificates of testing, inspection or approval shall, unless otherwise required by the Contract Documents, be secured by the Contractor and promptly delivered to the Architect.

§ 13.5.5 If the Architect is to observe tests, inspections or approvals required by the Contract Documents, the Architect will do so promptly and, where practicable, at the normal place of testing.

§ 13.5.6 Tests or inspections conducted pursuant to the Contract Documents shall be made promptly to avoid unreasonable delay in the Work.

§ 13.6 INTEREST

~~Payments due and unpaid under the Contract Documents shall bear interest from the date payment is due at such rate as the parties may agree upon in writing or, in the absence thereof, at the legal rate prevailing from time to time at the place where the Project is located.~~. Intentionally Omitted.

§ 13.7 TIME LIMITS ON CLAIMS

The Owner and Contractor shall commence all claims and causes of action, whether in contract, tort, breach of warranty or otherwise, against the other arising out of or related to the Contract in accordance with the requirements of the final dispute resolution method selected in the Agreement within the time period specified by applicable law,

Init.
/
AIA Document A201™ – 2007. Copyright © 1911, 1915, 1918, 1925, 1937, 1951, 1958, 1961, 1963, 1966, 1970, 1976, 1987, 1997 and 2007 by The American Institute of Architects. All rights reserved. WARNING: This AIA® Document is protected by U.S. Copyright Law and International Treaties. Unauthorized reproduction or distribution of this AIA® Document, or any portion of it, may result in severe civil and criminal penalties, and will be prosecuted to the maximum extent possible under the law. This document was produced by AIA software at 14:20:30 on 03/31/2015 under Order No.6386580634_1 which expires on 08/14/2015, and is not for resale.
User Notes: (1865697126)

but in any case not more than 10 years after the date of Substantial Completion of the Work. The Owner and Contractor waive all claims and causes of action not commenced in accordance with this Section 13.7.

ARTICLE 14 TERMINATION OR SUSPENSION OF THE CONTRACT

§ 14.1 TERMINATION BY THE CONTRACTOR

~~§ 14.1.1 The Contractor may terminate the Contract if the Work is stopped for a period of 30 consecutive days through no act or fault of the Contractor or a Subcontractor, Sub-subcontractor or their agents or employees or any other persons or entities performing portions of the Work under direct or indirect contract with the Contractor, for any of the following reasons:~~

- ~~.1 Issuance of an order of a court or other public authority having jurisdiction that requires all Work to be stopped;~~
- ~~.2 An act of government, such as a declaration of national emergency that requires all Work to be stopped;~~
- ~~.3 Because the Architect has not issued a Certificate for Payment and has not notified the Contractor of the reason for withholding certification as provided in Section 9.4.1, or because the Owner has not made payment on a Certificate for Payment within the time stated in the Contract Documents; or~~
- ~~.4 The Owner has failed to furnish to the Contractor promptly, upon the Contractor's request, reasonable evidence as required by Section 2.2.1.~~

~~§ 14.1.2 The Contractor may terminate the Contract if, through no act or fault of the Contractor or a Subcontractor, Sub-subcontractor or their agents or employees or any other persons or entities performing portions of the Work under direct or indirect contract with the Contractor, repeated suspensions, delays or interruptions of the entire Work by the Owner as described in Section 14.3 constitute in the aggregate more than 100 percent of the total number of days scheduled for completion, or 120 days in any 365-day period, whichever is less.~~

~~§ 14.1.3 If one of the reasons described in Section 14.1.1 or 14.1.2 exists, the Contractor may, upon seven days' written notice to the Owner and Architect, terminate the Contract and recover from the Owner payment for Work executed, including reasonable overhead and profit, costs incurred by reason of such termination, and damages.~~

~~§ 14.1.4 If the Work is stopped for a period of 60 consecutive days through no act or fault of the Contractor or a Subcontractor or their agents or employees or any other persons performing portions of the Work under contract with the Contractor because the Owner has repeatedly failed to fulfill the Owner's obligations under the Contract Documents with respect to matters important to the progress of the Work, the Contractor may, upon seven additional days' written notice to the Owner and the Architect, terminate the Contract and recover from the Owner as provided in Section 14.1.3.~~

§ 14.1.1: Intentionally Omitted

- .1 ;
- .2 ;
- .3
- .4 .

§ 14.1.2. Intentionally Omitted.

§ 14.1.3. Intentionally Omitted

§ 14.1.4. Intentionally Omitted

§ 14.2 TERMINATION BY THE OWNER FOR CAUSE

§ 14.2.1 The Owner may terminate the Contract if the Contractor

- .1 repeatedly refuses or fails to supply enough properly skilled workers or proper materials;
- .2 fails to make payment to Subcontractors for materials or labor in accordance with the respective agreements between the Contractor and the Subcontractors;
- .3 repeatedly disregards applicable laws, statutes, ordinances, codes, rules and regulations, or lawful orders of a public authority; or
- .4 otherwise is guilty of substantial breach of a provision of the Contract Documents.

AIA Document A201™ – 2007. Copyright © 1911, 1915, 1918, 1925, 1937, 1951, 1958, 1961, 1963, 1966, 1970, 1976, 1987, 1997 and 2007 by The American Institute of Architects. All rights reserved. WARNING: This AIA® Document is protected by U.S. Copyright Law and International Treaties. Unauthorized reproduction or distribution of this AIA® Document, or any portion of it, may result in severe civil and criminal penalties, and will be prosecuted to the maximum extent possible under the law. This document was produced by AIA software at 14:20:30 on 03/31/2015 under Order No.6386580634_1 which expires on 08/14/2015, and is not for resale.
User Notes: (1865697126)

§ 14.2.2 When any of the above reasons exist, the Owner, ~~upon certification by the Initial Decision Maker that sufficient cause exists to justify such action,~~ , may without prejudice to any other rights or remedies of the Owner and after giving the Contractor and the Contractor's surety, if any, seven days' written notice, terminate employment of the Contractor and may, subject to any prior rights of the surety:

.1 Exclude the Contractor from the site and take possession of all materials, equipment, tools, and construction equipment and machinery thereon owned by the Contractor;

.2 Accept assignment of subcontracts pursuant to Section 5.4; and

.3 Finish the Work by whatever reasonable method the Owner may deem expedient. Upon written request of the Contractor, the Owner shall furnish to the Contractor a detailed accounting of the costs incurred by the Owner in finishing the Work.

§ 14.2.3 When the Owner terminates the Contract for one of the reasons stated in Section 14.2.1, the Contractor shall not be entitled to receive further payment until the Work is finished.

§ 14.2.4 If the unpaid balance of the Contract Sum exceeds costs of finishing the Work, including compensation for the Architect's services and expenses made necessary thereby, and other damages incurred by the Owner and not expressly waived, such excess shall be paid to the Contractor. If such costs and damages exceed the unpaid balance, the Contractor shall pay the difference to the Owner. The amount to be paid to the Contractor or Owner, as the case may be, shall be certified by the Initial Decision Maker, upon application, and this obligation for payment shall survive termination of the Contract.

§ 14.3 SUSPENSION BY THE OWNER FOR CONVENIENCE

§ 14.3.1 The Owner may, without cause, order the Contractor in writing to suspend, delay or interrupt the Work in whole or in part for such period of time as the Owner may determine.

§ 14.3.2 The Contract Sum and Contract Time shall be adjusted for increases in the cost and time caused by suspension, delay or interruption as described in Section 14.3.1. Adjustment of the Contract Sum shall include profit. No adjustment shall be made to the extent

.1 that performance is, was or would have been so suspended, delayed or interrupted by another cause for which the Contractor is responsible; or

.2 that an equitable adjustment is made or denied under another provision of the Contract.

§ 14.4 TERMINATION BY THE OWNER FOR CONVENIENCE

§ 14.4.1 The Owner may, at any time, terminate the Contract for the Owner's convenience and without cause.

§ 14.4.2 Upon receipt of written notice from the Owner of such termination for the Owner's convenience, the Contractor shall

.1 cease operations as directed by the Owner in the notice;

.2 take actions necessary, or that the Owner may direct, for the protection and preservation of the Work; and

.3 except for Work directed to be performed prior to the effective date of termination stated in the notice, terminate all existing subcontracts and purchase orders and enter into no further subcontracts and purchase orders.

§ 14.4.3 In case of such termination for the Owner's convenience, the Contractor shall be entitled to receive payment for Work executed, and costs incurred by reason of such termination, along with reasonable overhead and profit on the Work not ~~executed.~~executed and costs incurred from this termination.

ARTICLE 15 CLAIMS AND DISPUTES

§ 15.1 CLAIMS

§ 15.1.1 DEFINITION

A Claim is a demand or assertion by one of the parties seeking, as a matter of right, payment of money, or other relief with respect to the terms of the Contract. The term "Claim" also includes other disputes and matters in question between the Owner and Contractor arising out of or relating to the Contract. The responsibility to substantiate Claims shall rest with the party making the Claim.

AIA Document A201™ – 2007. Copyright © 1911, 1915, 1918, 1925, 1937, 1951, 1958, 1961, 1963, 1966, 1970, 1976, 1987, 1997 and 2007 by The American Institute of Architects. All rights reserved. WARNING: This AIA® Document is protected by U.S. Copyright Law and International Treaties. Unauthorized reproduction or distribution of this AIA® Document, or any portion of it, may result in severe civil and criminal penalties, and will be prosecuted to the maximum extent possible under the law. This document was produced by AIA software at 14:20:30 on 03/31/2015 under Order No.6386580634_1 which expires on 08/14/2015, and is not for resale.
User Notes: (1865697126)

§ 15.1.2 NOTICE OF CLAIMS

Claims by either the Owner or Contractor must be initiated by written notice to the other party and to the Initial Decision Maker with a copy sent to the Architect, if the Architect is not serving as the Initial Decision Maker. Claims by either party must be initiated within 21 days after occurrence of the event giving rise to such Claim or within 21 days after the claimant first recognizes the condition giving rise to the Claim, whichever is later.

§ 15.1.3 CONTINUING CONTRACT PERFORMANCE

Pending final resolution of a Claim, except as otherwise agreed in writing or as provided in Section 9.7 and Article 14, the Contractor shall proceed diligently with performance of the Contract and the Owner shall continue to make payments in accordance with the Contract Documents. The Architect will prepare Change Orders and issue Certificates for Payment in accordance with the decisions of the Initial Decision Maker.

§ 15.1.4 CLAIMS FOR ADDITIONAL COST

If the Contractor wishes to make a Claim for an increase in the Contract Sum, written notice as provided herein shall be given before proceeding to execute the Work. Prior notice is not required for Claims relating to an emergency endangering life or property arising under Section 10.4.

§ 15.1.5 CLAIMS FOR ADDITIONAL TIME

§ 15.1.5.1 If the Contractor wishes to make a Claim for an increase in the Contract Time, written notice as provided herein shall be given. The Contractor's Claim shall include an estimate of cost and of probable effect of delay on progress of the Work. In the case of a continuing delay, only one Claim is necessary.

§ 15.1.5.2 If adverse weather conditions are the basis for a Claim for additional time, such Claim shall be documented by data substantiating that weather conditions were abnormal for the period of time, could not have been reasonably anticipated and had an adverse effect on the scheduled construction.

§ 15.1.6 CLAIMS FOR CONSEQUENTIAL DAMAGES

The Contractor and Owner waive Claims against each other for consequential damages arising out of or relating to this Contract. This mutual waiver includes

.1 damages incurred by the Owner for rental expenses, for losses of use, income, profit, financing, business and reputation, and for loss of management or employee productivity or of the services of such persons; and

.2 damages incurred by the Contractor for principal office expenses including the compensation of personnel stationed there, for losses of financing, business and reputation, and for loss of profit except anticipated profit arising directly from the Work.

This mutual waiver is applicable, without limitation, to all consequential damages due to either party's termination in accordance with Article 14. Nothing contained in this Section 15.1.6 shall be deemed to preclude an award of liquidated damages, when applicable, in accordance with the requirements of the Contract Documents.

§ 15.2 INITIAL DECISION

§ 15.2.1 Decision of Owner. Claims, excluding those arising under Sections 10.3, 10.4, 11.3.9, and 11.3.10, shall be referred to the Initial Decision Maker for initial ~~decision.~~ evaluation and recommendation. The Architect will serve as the Initial Decision Maker, unless otherwise indicated in the Agreement. Except for those Claims excluded by this Section 15.2.1, ~~an initial decision~~ a final decision by the Owner shall be required as a condition precedent to ~~mediation of any Claim~~ litigation of all Claims between the Contractor and Owner arising prior to the date final payment is due, unless 30 days have passed after the Claim has been referred to the ~~Initial Decision Maker~~ Architect with no decision having been ~~rendered.~~ rendered by the Owner. Unless the Initial Decision Maker and all affected parties agree, the Initial Decision Maker will not ~~decide~~ evaluate disputes between the Contractor and persons or entities other than the Owner.

§ 15.2.2 The ~~Initial Decision Maker~~ Architect will review Claims and within ten days of the receipt of ~~a~~ the Claim take one or more of the following actions: (1) request additional supporting data from the claimant or a response with supporting data from the other party, (2) ~~reject~~ recommend rejection of the Claim in whole or in part, (3) ~~approve~~ recommend approval of the Claim, (4) ~~suggest~~ recommend a compromise, or (5) advise the parties that the Initial Decision Maker is unable to resolve the Claim if the Initial Decision Maker lacks sufficient information to

AIA Document A201™ – 2007. Copyright © 1911, 1915, 1918, 1925, 1937, 1951, 1958, 1961, 1963, 1966, 1970, 1976, 1987, 1997 and 2007 by The American Institute of Architects. All rights reserved. WARNING: This AIA® Document is protected by U.S. Copyright Law and International Treaties. Unauthorized reproduction or distribution of this AIA® Document, or any portion of it, may result in severe civil and criminal penalties, and will be prosecuted to the maximum extent possible under the law. This document was produced by AIA software at 14:20:30 on 03/31/2015 under Order No.6386580634_1 which expires on 08/14/2015, and is not for resale.
User Notes: (1865697126)

evaluate the merits of the Claim or if the Initial Decision Maker concludes that, in the Initial Decision Maker's sole discretion, it would be inappropriate for the Initial Decision Maker to resolve the Claim.

§ 15.2.3 In evaluating Claims, the Initial Decision Maker may, but shall not be obligated to, consult with or seek information from either party or from persons with special knowledge or expertise who may assist the Initial Decision Maker in rendering a decision. The Initial Decision Maker may request the Owner to authorize retention of such persons at the Owner's expense.

§ 15.2.4 If the Initial Decision Maker requests a party to provide a response to a Claim or to furnish additional supporting data, such party shall respond, within ten days after receipt of such request, and shall either (1) provide a response on the requested supporting data, (2) advise the Initial Decision Maker when the response or supporting data will be furnished or (3) advise the Initial Decision Maker that no supporting data will be furnished. Upon receipt of the response or supporting data, if any, the Initial Decision Maker will ~~either reject or approve~~ recommend either rejection or approval of the Claim in whole or in part.

§ 15.2.5 The Initial Decision Maker will ~~render an initial decision~~ recommend approving or rejecting the Claim, or indicating that the Initial Decision Maker is unable to resolve the Claim. This initial decision shall (1) be in writing; (2) state the reasons therefor; and (3) notify the parties and the Architect, if the Architect is not serving as the Initial Decision Maker, of any change in the Contract Sum or Contract Time or both. The ~~initial~~ Owner's decision shall be final and binding ~~on the parties but subject to mediation and, if the parties fail to resolve their dispute through mediation, to binding dispute resolution.~~subject to mediation or arbitration.

~~**§ 15.2.6** Either party may file for mediation of an initial decision at any time, subject to the terms of Section 15.2.6.1.~~

~~**§ 15.2.6.1** Either party may, within 30 days from the date of an initial decision, demand in writing that the other party file for mediation within 60 days of the initial decision. If such a demand is made and the party receiving the demand fails to file for mediation within the time required, then both parties waive their rights to mediate or pursue binding dispute resolution proceedings with respect to the initial decision.~~

§ 15.2.6. Intentionally Omitted

§ 15.2.6.1.. Intentionally Omitted.

§ 15.2.7 In the event of a Claim against the Contractor, the Owner may, but is not obligated to, notify the surety, if any, of the nature and amount of the Claim. If the Claim relates to a possibility of a Contractor's default, the Owner may, but is not obligated to, notify the surety and request the surety's assistance in resolving the controversy.

§ 15.2.8 If a Claim relates to or is the subject of a mechanic's lien, the party asserting such Claim may proceed in accordance with applicable law to comply with the lien notice or filing deadlines.

§ 15.3 MEDIATION

~~**§ 15.3.1** Claims, disputes, or other matters in controversy arising out of or related to the Contract except those waived as provided for in Sections 9.10.4, 9.10.5, and 15.1.6 shall be subject to mediation as a condition precedent to binding dispute resolution.~~

~~**§ 15.3.2** The parties shall endeavor to resolve their Claims by mediation which, unless the parties mutually agree otherwise, shall be administered by the American Arbitration Association in accordance with its Construction Industry Mediation Procedures in effect on the date of the Agreement. A request for mediation shall be made in writing, delivered to the other party to the Contract, and filed with the person or entity administering the mediation. The request may be made concurrently with the filing of binding dispute resolution proceedings but, in such event, mediation shall proceed in advance of binding dispute resolution proceedings, which shall be stayed pending mediation for a period of 60 days from the date of filing, unless stayed for a longer period by agreement of the parties or court order. If an arbitration is stayed pursuant to this Section 15.3.2, the parties may nonetheless proceed to the selection of the arbitrator(s) and agree upon a schedule for later proceedings.~~

AIA Document A201™ – 2007. Copyright © 1911, 1915, 1918, 1925, 1937, 1951, 1958, 1961, 1963, 1966, 1970, 1976, 1987, 1997 and 2007 by The American Institute of Architects. **All rights reserved.** WARNING: This AIA® Document is protected by U.S. Copyright Law and International Treaties. Unauthorized reproduction or distribution of this AIA® Document, or any portion of it, may result in severe civil and criminal penalties, and will be prosecuted to the maximum extent possible under the law. This document was produced by AIA software at 14:20:30 on 03/31/2015 under Order No.6386580634_1 which expires on 08/14/2015, and is not for resale.
User Notes: (1865697126)

~~§ 15.3.3 The parties shall share the mediator's fee and any filing fees equally. The mediation shall be held in the place where the Project is located, unless another location is mutually agreed upon. Agreements reached in mediation shall be enforceable as settlement agreements in any court having jurisdiction thereof.~~

§ 15.3.1. Intentionally Omitted.

§ 15.3.2... Intentionally Omitted.

§ 15.3.3... Intentionally Omitted.

§ 15.4 ARBITRATION

~~§ 15.4.1 If the parties have selected arbitration as the method for binding dispute resolution in the Agreement, any Claim subject to, but not resolved by, mediation shall be subject to arbitration which, unless the parties mutually agree otherwise, shall be administered by the American Arbitration Association in accordance with its Construction Industry Arbitration Rules in effect on the date of the Agreement. A demand for arbitration shall be made in writing, delivered to the other party to the Contract, and filed with the person or entity administering the arbitration. The party filing a notice of demand for arbitration must assert in the demand all Claims then known to that party on which arbitration is permitted to be demanded.~~

~~§ 15.4.1.1 A demand for arbitration shall be made no earlier than concurrently with the filing of a request for mediation, but in no event shall it be made after the date when the institution of legal or equitable proceedings based on the Claim would be barred by the applicable statute of limitations. For statute of limitations purposes, receipt of a written demand for arbitration by the person or entity administering the arbitration shall constitute the institution of legal or equitable proceedings based on the Claim.~~

~~§ 15.4.2 The award rendered by the arbitrator or arbitrators shall be final, and judgment may be entered upon it in accordance with applicable law in any court having jurisdiction thereof.~~

~~§ 15.4.3 The foregoing agreement to arbitrate and other agreements to arbitrate with an additional person or entity duly consented to by parties to the Agreement shall be specifically enforceable under applicable law in any court having jurisdiction thereof.~~

§ 15.4.1... Intentionally Omitted.

§ 15.4.1.1.. Intentionally Omitted.

§ 15.4.2. Intentionally Omitted.

§ 15.4.3. Intentionally Omitted.

§ 15.4.4 CONSOLIDATION OR JOINDER

~~§ 15.4.4.1 Either party, at its sole discretion, may consolidate an arbitration conducted under this Agreement with any other arbitration to which it is a party provided that (1) the arbitration agreement governing the other arbitration permits consolidation, (2) the arbitrations to be consolidated substantially involve common questions of law or fact, and (3) the arbitrations employ materially similar procedural rules and methods for selecting arbitrator(s).~~

~~§ 15.4.4.2 Either party, at its sole discretion, may include by joinder persons or entities substantially involved in a common question of law or fact whose presence is required if complete relief is to be accorded in arbitration, provided that the party sought to be joined consents in writing to such joinder. Consent to arbitration involving an additional person or entity shall not constitute consent to arbitration of any claim, dispute or other matter in question not described in the written consent.~~

§ 15.4.4.1. Intentionally Omitted.

§ 15.4.4.2.. Intentionally Omitted.

§ 15.4.4.3. Intentionally Omitted.

AIA Document A201™ – 2007. Copyright © 1911, 1915, 1918, 1925, 1937, 1951, 1958, 1961, 1963, 1966, 1970, 1976, 1987, 1997 and 2007 by The American Institute of Architects. All rights reserved. WARNING: This AIA® Document is protected by U.S. Copyright Law and International Treaties. Unauthorized reproduction or distribution of this AIA® Document, or any portion of it, may result in severe civil and criminal penalties, and will be prosecuted to the maximum extent possible under the law. This document was produced by AIA software at 14:20:30 on 03/31/2015 under Order No.6386580634_1 which expires on 08/14/2015, and is not for resale.
User Notes:

(1865697126)

PART II

1. SCHEDULES AND REPORTS

Contractor shall submit for approval the following items in four (4) copies prior to commencing the Work:

a. A complete, detailed construction progress schedule in weekly increments, showing anticipated start and completion of all sections of the Work. Also, see sections 3.10 and 3.10.1

b. A complete list of Subcontractors

c. A breakdown of the Project contract price for use in processing monthly requisitions.

d. A projection of contract's monthly cash flow requirements for the duration of the Project.

e. The above requirements may be waived for small projects at the discretion of the Engineer.

2. MINORITY PARTICIPATION

The Contractor shall notify the City in writing of the names of any minority and disadvantaged business subcontractors to be used on the Project, including the estimated dollar amount of such subcontract and the minority classification of such subcontractors. A minority and disadvantaged business is one that is at least 51% owned by an Asian American, Black, Hispanic, and American Indian, Eskimo, Aleut, or Female.

3. EROSION & SEDIMENT CONTROL

On construction projects that are required by the City's Erosion & Sediment Control ordinance (City Code Chapter 15) to have an approved erosion and sediment control plan, the Contractor shall be required to implement the approved plan and comply with all conditions of the plan. A copy of the approved plan and the Virginia Erosion and Sediment Control Handbook. (Third Edition, 1992) shall be kept at the City. If the Contractor determines that the approved plan cannot be effectively carried out, the Contractor shall be responsible for notifying the plan approving authority and requesting a plan amendment as provided for in the Virginia Erosion and Sediment Control Law (Code of Virginia Title 10.1, Chapter 5, Article 4, Section 10.1-563C).

4. RIGHT TO AUDIT

For cost-reimbursement contracts, change orders issued for fixed priced contracts or other contracts in excess of $30,000, which include the provisions of services, the Contractor shall retain all books, records and other documents relative to this Contract for five (5) years after final payment or until audited by the Office of the City Auditors shall have full access to and the right to examine and duplicate any of said materials during said period.

~~§ 15.4.4.3 The Owner and Contractor grant to any person or entity made a party to an arbitration conducted under this Section 15.4, whether by joinder or consolidation, the same rights of joinder and consolidation as the Owner and Contractor under this Agreement.~~

Init.

/

AIA Document A201™ – 2007. Copyright © 1911, 1915, 1918, 1925, 1937, 1951, 1958, 1961, 1963, 1966, 1970, 1976, 1987, 1997 and 2007 by The American Institute of Architects. All rights reserved. WARNING: This AIA® Document is protected by U.S. Copyright Law and International Treaties. Unauthorized reproduction or distribution of this AIA® Document, or any portion of it, may result in severe civil and criminal penalties, and will be prosecuted to the maximum extent possible under the law. This document was produced by AIA software at 14:20:30 on 03/31/2015 under Order No.6386580634_1 which expires on 08/14/2015, and is not for resale.
User Notes: (1865697126)

VDOT

SPECIAL

PROVISIONS

CIVIL RIGHTS DIVISION
REQUIREMENTS FOR THE
LOCALLY ADMINISTERED PROJECTS
(FEDERALLY FUNDED PROJECTS)

The LOCALITY, its agents, employees, assigns or successors, and any person, firm, or agency of whatever nature with whom it may contract or make an agreement, shall comply with the provisions of the Virginia Fair Employment Contracting Act, Sections 2.2-4200 through 2.2-4201 of the Code of Virginia, as amended. During the performance of this Agreement, the LOCALITY agrees as follows:

a. The LOCALITY will not discriminate against any employee or applicant for employment because of race, religion, color, sex, or national origin, except where religion, sex, or national origin is a bona fide occupational qualification reasonably necessary to the normal operation of the LOCALITY. The LOCALITY agrees to post in conspicuous places, available to employees and applicants for employment, notices setting forth the provisions of this nondiscrimination clause, including the names of all contracting agencies with which the LOCALITY has agreements of over ten thousand dollars.

b. The LOCALITY will, in all solicitations or advertisements for employees placed by or on behalf of the LOCALITY, state that the LOCALITY is an equal opportunity employer; provided, however, that notices, advertisements and solicitations placed in accordance with federal law, rule or regulation shall be deemed sufficient for the purpose of meeting the requirements of this section.

The LOCALITY will include the provisions of the foregoing paragraphs "a" and "b" in every subcontract or purchase order of over ten thousand dollars, so that such provisions will be binding upon each subcontractor or vendor. Nothing contained in this section shall be deemed to empower any agency to require any LOCALITY to grant preferential treatment to, or discriminate against, any individual or any group because of race, color, religion, sex or national origin on account of an imbalance which may exist with respect to the total number or percentage of persons of any race, color, religion, sex or national origin employed by such LOCALITY in comparison with the total number or percentage of persons of such race, color, religion, sex or national origin in any community or in the Commonwealth.

NON-DISCRIMINATION PROVISION: The LOCALITY agrees to abide by the provisions of Title VI and Title VII of the Civil Rights Act of 1964 (42 USC 2000e), which prohibits discrimination against any employee or applicant for employment, or any applicant or recipient of services, on the basis of race, religion, color, sex or national origin; and further agrees to abide by Executive Order No. 11246 entitled "Equal Employment Opportunity," as amended by Executive Order No. 11375 and as supplemented in the Department of Labor Regulations (41 CFR Part 60), which prohibit discrimination on the basis of age. Sections 49 CFR 21 and 26 CFR 710.405(b) are incorporated by reference in all contracts and subcontracts funded in whole or in part with federal funds. The LOCALITY shall comply with the Americans with Disabilities Act (ADA), and with the provisions of the Virginians with Disabilities Act, Sections 51.5-40 through 51.5-46 of the Code of Virginia, as amended, the terms of which are incorporated herein by reference.

In the event of the LOCALITY'S noncompliance with the nondiscrimination provisions of this Agreement, the DEPARTMENT shall impose such contract sanctions as it or the Federal Highway Administration (FHWA) may determine to be appropriate, including but not limited to:

a. withholding of payments to the LOCALITY under this Agreement until the LOCALITY complies; and/or

b. cancellation, termination or suspension of this Agreement, in whole or in part.

TITLE VI OF THE CIVIL RIGHTS ACT OF 1964: During the performance of this Agreement, the LOCALITY, for itself, its assignees and successors in interest, agrees as follows:

a. Compliance with Regulations: The LOCALITY will comply with the Regulations of the United States Department of Transportation relative to nondiscrimination in Federally-assisted programs of the United States Department of Transportation (Title 49), Code of Federal Regulations, Part 21, (hereinafter referred to as the Regulations), which are herein incorporated by reference and made a part of this Agreement.

b. Nondiscrimination: The LOCALITY with regard to the services provided by it after award and prior to completion of this Agreement, will not discriminate on the grounds of race, color, sex, national origin, age or handicap in the selection and retention of subcontractors, including procurements of materials and leases of equipment. The LOCALITY will not participate either directly or indirectly in the discrimination prohibited by Section 21.5 of the Regulations, including employment practices when the services covers a program set forth in Appendix B of the Regulations.

c. Solicitations for Subcontractors: In all solicitations, either by competitive bidding or negotiation made by the LOCALITY for work to be performed under a subcontract, including procurements of materials or equipment, each potential subcontractor or supplier shall be notified by the LOCALITY of their obligations under this Agreement.

d. Information and Reports: The LOCALITY will provide all information and reports required by the Regulations, or orders and instructions issued pursuant thereto, and will permit access to its books, records, accounts, other sources of information, and its facilities as may be determined by the DEPARTMENT or the FHWA to be pertinent to ascertain compliance with such Regulations, orders and instructions. Where any information required of the LOCALITY is in the exclusive possession of another who fails or refuses to furnish this information, the LOCALITY shall so certify to the DEPARTMENT, or the FHWA as appropriate, and shall set forth what efforts it has made to obtain the information.

e. Incorporation of Provisions: The LOCALITY will include the provisions of paragraphs "a" through "d" in every subcontract, including procurements of materials and leases of equipment, unless exempt by the Regulations, order or instructions issued pursuant thereto. The LOCALITY will take such action with respect to any subcontractor or procurement as the DEPARTMENT or the FHWA may direct as a means of enforcing such provisions including sanctions for noncompliance: Provided, however, in the event the LOCALITY becomes involved in, or is threatened with, litigation with a subcontractor or supplier as a result of such direction, the LOCALITY may request the DEPARTMENT to enter into such litigation to protect the interests of the DEPARTMENT and, in addition, may request the United States to enter into such litigation to protect the interests of the United States.

CERTIFICATION REGARDING NON-SEGREGATED FACILITIES: By the execution of this Agreement, the LOCALITY certifies that it does not maintain or provide for its employees any segregated facilities at any of its establishments, and that it does not permit its employees to

perform their services at any location, under its control, where segregated facilities are maintained. It certifies further that it will not maintain or provide for its employees any segregated facilities at any of its establishments, and that it will not permit its employees to perform their services at any location under its control, where segregated facilities are maintained. The LOCALITY further certifies that no employee will be denied access to adequate facilities on the basis of sex or disability. As used in this certification, the term "segregated facilities" means any waiting rooms, work areas, restrooms and washrooms, restaurants and other eating areas, time clocks, locker rooms and other storage or dressing areas, parking lots, drinking fountains, recreation or entertainment areas, transportation, and housing facilities provided for employees which are segregated by explicit directive or are in fact segregated on the basis of race, creed, color, national origin, age or handicap, because of habit, local custom or otherwise. It agrees that, except where it has obtained identical certification from proposed subcontractors and material suppliers for specific time periods, it will obtain identical certification from proposed subcontractors or material suppliers prior to the award of subcontracts or the consummation of material supply agreements exceeding ten thousand dollars, and that it will retain such certifications in its files.

TDD/TTY EQUIPMENT FOR THE DEAF: When seeking public participation through the maintenance of a toll free hot line number and/or publishing project-related materials, the LOCALITY agrees to ensure that all citizens have equally effective communication. The LOCALITY agrees to provide or identify a telecommunications device for the deaf/teletypewriter (TDD/TTY) or acceptable means of telephone access for individuals with impaired speech or hearing. The LOCALITY will provide notice of a TDD/TTY number whenever a standard telephone number is provided.

GOAL SETTING PROCESS

DISADVANTAGED BUSINESS ENTERPRISES: The LOCALITY, its agents, employee, assigns, or successors, and any person, firm or agency of whatever nature with whom it may contract or make an agreement, shall comply with the provisions of 49 CFR, Part 26 and Part 23, as amended, which is hereby made part of this Agreement by reference. The LOCALITY shall take all necessary and reasonable steps in accordance with 49 CFR, Part 26, and Part 23 as amended, to ensure that DBE's have equal opportunity to compete for and perform on contracts and subcontracts under this Agreement.

A Disadvantaged Business Enterprise ("DBE") is a business certified in accordance with the guidelines of 49 CFR, Part 26, and Part 23, as amended, by the United States Department of Transportation designated and approved agency. A listing of certified firms can be located at www.DMBE.state.va.us or by contacting the Department of Minority Business Enterprises, 200-202 9th Street, 11th Floor, Richmond, Virginia 23219, or by calling (804) 786-6585.

DBE contract goals are established by the District Civil Rights Office (DCRO) in accordance with established Department policy.

CONSTRUCTION: The LOCALITY will submit the detail estimate for the proposed project, which includes work activities and their associated costs, and the final total cost assigned to the project, to the DCRO no later than two months prior to advertisement, in order that DBE goals can be established. Once the project has been advertised and bids received by the LOCALITY, the LOCALITY will forward the DBE information regarding DBE participation commitment from the lowest responsive and responsible bidders to the DCRO for review and recommendations regarding award of the project. The award of all bids must adhere to federal regulations, as promulgated in 49 CFR, Part 26 and Part 23 and the DEPARTMENT'S Special

Provision for Section 110.04 of the Specifications relative to 'good faith efforts' by contractors in making the required DBE participation**.** Prior to award, contractors are expected to achieve the DBE goal or demonstrate that a good faith effort has been made to achieve the goal.

After award, the LOCALITY will submit a copy of the signed contract and supporting DBE information to the DCRO. All contractors that fail to meet the DBE goal are subject to review by the DEPARTMENT to determine whether a 'good faith effort' was made as outlined in 49 CFR, Parts 26.53 and Special Provision 110.04**.** The locality is responsible for ensuring that the contractor achieves the goal or demonstrates that a good faith effort has been made. After award, in the event of the LOCALITY'S noncompliance with the provisions of this part, the DEPARTMENT shall impose such contract sanctions as it or the Federal Highway Administration (FHWA) may determine to be appropriate, including but not limited to:

a. withholding of payments to the LOCALITY under this Agreement until the LOCALITY complies; and/or

b. cancellation, termination or suspension of this Agreement, in whole or in part.

PROFESSIONAL SERVICES: The LOCALITY will submit information for the service(s) to be performed to include scope of work, reporting requirements, and duration of contract, no later than two months prior to release of Request for Proposals (RFP) to the DCRO for review, in order that a DBE goal can be established. Once the RFP has been advertised and responses received, the LOCALITY will forward to the DCRO, the results of evaluation of the proposals received to include firm data sheet, DBE subcontracting plan, letter indicating DBE agreement to perform work, and rating criteria for determining good faith effort relative to the attainment of the DBE goal. The DCRO will recommend selection of bidder for award. The award of bids must adhere to the federal regulations, as promulgated in 49 CFR, Part 26, Part 23 and the DEPARTMENT'S Special Provision for Section 110.04 of the Specifications relative to 'good faith efforts' by contractors in making the DBE participation. After the contract is awarded, the LOCALITY will submit a copy of the signed consultant agreement. The locality is responsible for ensuring that the contractor achieves the goal or demonstrates that a good faith effort has been made. After award, in the event of the LOCALITY'S noncompliance with the provisions of this part, the DEPARTMENT shall impose such contract sanctions as it or the Federal Highway Administration (FHWA) may determine to be appropriate, including but not limited to:

a. withholding of payments to the LOCALITY under this Agreement until the LOCALITY complies; and/or

b. cancellation, termination or suspension of this Agreement, in whole or in part.

COMPLIANCE MONITORING

The LOCALITY must take every reasonable step to ensure that DBEs committed to perform work under contract perform a commercially useful function ("CUF"). It is the DEPARTMENT'S responsibility to determine compliance with the commercially useful function requirement. The requirements are described in 49 CFR, Part 26.55. The DCRO will monitor construction activity to ensure that DBE firms are performing work in accordance with federal regulations. The DCRO will conduct DBE Compliance Reviews on each DBE firm performing work for participation credit/goal attainment on each project.

The LOCALITY will ensure that the DCRO receives copies of all contracts awarded and DBE subcontracts, which will initiate the monitoring process. Compliance monitoring includes: site visits, review of documents such as material tickets, subcontracts, lease agreements, etc. and any other information needed to render a compliance determination.

MONITORING PAYMENTS TO DBE FIRMS

VDOT requires that the LOCALITY maintain records and documents of payments to DBE firms for the performance of their contract or subcontract. At a minimum, these records must consist of type of work DBE firm performed, dates of work, dollar amount paid for work, and on what date payment was made. These records must be submitted on a MONTHLY basis to the DCRO for each locality. Documentation should be submitted on form C-63/A.

The LOCALITY will ensure that all DBE firms are paid promptly in accordance with 49 CFR, Part 26.29. The DEPARTMENT'S prompt pay guidelines are indicated in the DBE Program Plan.

The LOCALITY will maintain records and documents verifying DBE firms awarded contracts and subcontracts to include: name of DBE firm, indicating if firm is a certified minority or woman owned firm, type of work; and dollar value of contract or subcontract and dates work was performed.

ON THE JOB TRAINING ("OJT") PROGRAM: The LOCALITY, its agents, employees, assigns, or successors, and any person, firm or agency of whatever nature with whom it may contract or make an agreement, shall comply with the special training provisions in accordance with 23 CFR, Part 230.107(b), as amended, which is hereby made part of this Agreement by reference. The LOCALITY shall take all necessary and reasonable steps to ensure training and upgrading of minorities, women, veterans, and other disadvantaged persons toward achieving journeymen status within a given construction trade. The program seeks to reduce overhead costs associated with training through a stipend reimbursement to the contractor while offering the opportunity to enhance short and long-term workforce needs. The current OJT reimbursement rate is three dollars per trainee hour.

The OJT program requires full utilization of all available training and skill-improvement opportunities to assure the increased participation of minority groups and disadvantaged persons and women in all phases of the highway construction industry. It is the intent that each contractor's workforce and construction site should reflect the same diversity as the community.

TRAINEE GOALS

The DCRO will set a trainee goal on all federally assisted contracts in accordance with guidelines outlined in 23 CFR, Part 230, Parts 111, 113 and 117. The DCRO will determine the trainee goal prior to advertisement. The DCRO will approve all trainee enrollments to ensure that disadvantaged persons are given opportunities for training utilizing form C-65. Trainee work classifications and the requirements of each will follow those already developed by the DEPARTMENT and the Virginia Transportation Construction Alliance ("VTCA"). Copies of the OJT Trainee Classification Handbook can be obtained by contacting the DCRO.

MONITORING OF OJT PROGRAM

VDOT requires that the LOCALITY maintain records and documents of trainee enrollments to include: name of trainee, sex, gender, trainee work classification, hourly wage rates, start date, completion date and wage increments as training progressed. This information will include reason(s) trainees do not complete the training program and number of dropouts and terminations prior to completion of the training program. WEEKLY trainee records will be submitted to the DCRO on form C-67.

The LOCALITY will compile OJT records and submit them on a quarterly basis to the appropriate DCRO for each locality. Documentation will be submitted no later than the first day of the first month following the federal fiscal year quarter, which commences October 1st. The LOCALITY will submit an annual report to the appropriate DCRO no later than the third of each January for the preceding calendar year.

The LOCALITY will maintain records and documents supporting the reimbursements to contractors for each trainee hour achieved via the OJT program. These records will include: contractor's name, project number, location of project, trainee goal for the contract, name of trainee(s), trainee(s) work classifications, number of hours completed by each trainee(s), and dollar amount paid to the contractor. Civil Rights Division Trainee Certificates will be presented to each trainee completing the OJT program. It is recommended that copies of these certificates be part of the OJT trainee records.

CONTRACTOR COMPLIANCE: The LOCALITY will ensure that all contractors and subcontractors awarded work will meet contractual Equal Opportunity ("EO") requirements under Executive Order 11246, as amended, 23 U.S. C., FHWA-1273 (23 CFR, Parts 633), Section 110.03 (Equal Employment Opportunity) of Roads and Bridges Specifications and Title VI of the Civil Rights Act of 1964, as amended. All contractors and subcontractors will submit to the DCRO the required information to include the EO Policy, EO Liaison Officer, company employment (C-64) and monthly project site employment reports (C-57) as indicated in Section 110.03 of Roads and Bridges Specifications.

The DCRO will monitor for adherence to Contractor Compliance as outlined in 23 CFR, Part 230.409,411, and 413.

The LOCALITY will forward copies of all awarded contracts to the appropriate DCRO to initiate the monitoring process. The monitoring process includes: project site visits, employee interviews, and review of documentation (subcontracts, lease agreements, material tickets, etc.). Formal Contractor Compliance EO Reviews will be conducted by the DCRO as needed. Guidance for conducting compliance reviews is provided in the Contract Compliance Plan (Part I of Affirmative Action Plan) approved by Federal Highway Administration in 2002. Copies of the Plan can be obtained from the DCRO.

REPORTING: The LOCALITY, its contractors and subcontractors having a contract or subcontract of at least $10,000 or more is required to submit an annual employment report to the DCRO in accordance with 23 CFR, Part 230.21. The report reflects all employees on site during the third week of each month of July during which work is performed. This information will be submitted to the DCRO on form C-57 indicating number of employees in each work classification, their race and sex. All employees on site must be accounted for to include men and women, both journeymen level, trainees and apprentices.

The annual employment report will be submitted to each DCRO for each federally assisted project no later than the second week of each August.

RECORD KEEPING: The LOCALITY will maintain all records pertaining to the individual projects for five years after completion of each project. Records shall include but not be limited to contracts, subcontractors, purchase orders, material delivery tickets, lease agreements, joint check agreements, payments made to contractors, inspections and permits. This is in accordance with federal guidelines.

The LOCALITY shall provide all information and reports required by the regulations or directives issued pursuant thereto, and shall permit access to its books, records, accounts, and other sources of information, and its facilities as may be determined by the DEPARTMENT or the FHWA to be pertinent to ascertain compliance with such regulations, orders and requirements.

The Department's Civil Rights Division or Office of Inspector General or FHWA will perform audits as needed to ensure compliance with all Guidelines.

CIVIL RIGHTS DIVISION
REQUIREMENTS FOR THE
LOCALLY ADMINISTERED PROJECTS
(STATE FUNDED PROJECTS)

VIRGINIA FAIR EMPLOYMENT CONTRACTING ACT: The RECIPIENT, its agents, employees, assigns or successors, and any person, firm, or agency of whatever nature with whom it may contract or make an agreement, shall comply with the provisions of the Virginia Fair Employment Contracting Act, Sections 2.204200 through 2.2-4201 of the Code of Virginia (1950), as amended. During the performance of this Agreement, the RECIPIENT agrees as follows:

a. The RECIPIENT will not discriminate against any employee or applicant for employment because of race, religion, color, sex, or national origin, except where religion, sex, or national origin is a bona fide occupational qualification reasonably necessary to the normal operation of the RECIPIENT. The RECIPIENT agrees to post in conspicuous places, available to employees and applicants for employment, notices setting forth the provisions of this nondiscrimination clause, including the names of all contracting agencies with which the RECIPIENT has Agreements of over ten thousand dollars.

b. The RECIPIENT will, in all solicitations or advertisements for employees placed by or on behalf of the RECIPIENT, state that the RECIPIENT is an equal opportunity employer; provided, however, that notices, advertisements and solicitations placed in accordance with federal law, rule or regulation shall be deemed sufficient for the purpose of meeting the requirements of this section.

The RECIPIENT will include the provisions of the foregoing paragraphs "a" and "b" in every subcontract or purchase order of over ten thousand dollars, so that such provisions will be binding upon each subcontractor or vendor. Nothing contained in this section shall be deemed to empower any agency to require any RECIPIENT to grant preferential treatment to, or discriminate against, any individual or any group because of race, color, religion, sex or national origin on account of an imbalance which may exist with respect to the total number or percentage of persons of any race, color, religion, sex or national origin employed by such RECIPIENT in comparison with the total number or percentage of persons of such race, color, religion, sex or national origin in any community or in the Commonwealth.

NON-DISCRIMINATION PROVISION: The RECIPIENT agrees to abide by the provisions of Title VI and Title VII of the Civil Rights Act of 1964 (42 USC 2000e), which prohibits discrimination against any employee or applicant for employment, or any applicant or recipient of services, on the basis of race, religion, color, sex or national origin; and further agrees to abide by Executive Order No. 11246 entitled "Equal Employment Opportunity," as amended by Executive Order No. 11375 and as supplemented in the Department of Labor Regulations (41 CFR Part 60), which prohibit discrimination on the basis of age. Sections 49 CFR 21 and 26 CFR 710.405(b) are incorporated by reference in all contracts and subcontracts funded in whole or in part with federal funds. The RECIPIENT shall comply with the Americans with Disabilities Act (ADA), and with the provisions of the Virginians with Disabilities Act, Sections 51.5-40 through 51.5-46 of the Code of Virginia (1950), as amended, the terms of which are incorporated herein by reference.

In the event of the RECIPIENT'S noncompliance with the nondiscrimination provisions of this

Agreement, the Department shall impose such contract sanctions as it or the Federal Highway Administration may determine to be appropriate, including but not limited to:

a. withholding of payments to the RECIPIENT under this Agreement until the RECIPIENT complies; and/or

b. cancellation, termination or suspension of this Agreement, in whole or in part.

TITLE VI OF THE CIVIL RIGHTS ACT OF 1964: During the performance of this Agreement, the RECIPIENT, for itself, its assignees and successors in interest (herein referred to as "the RECIPIENT"), agrees as follows:

a. Compliance with Regulations: The RECIPIENT will comply with the Regulations of the U.S. Department of Transportation relative to nondiscrimination in Federally-assisted programs of the U.S. Department of Transportation (Title 49), Code of Federal Regulations, Part 21, (hereinafter referred to as the Regulations), which are herein incorporated by reference and made a part of this Agreement.

b. Nondiscrimination: The RECIPIENT with regard to the services provided by it after award and prior to completion of this Agreement, will not discriminate on the grounds of race, color, sex, national origin, age or handicap in the selection and retention of subcontractors, including procurements of materials and leases of equipment. The RECIPIENT will not participate either directly or indirectly in the discrimination prohibited by Section 21.5 of the Regulations, including employment practices when the services covers a program set forth in Appendix B of the Regulations.

c. Solicitations for Subcontractors: In all solicitations, either by competitive bidding or negotiation made by the RECIPIENT for work to be performed under a subcontract, including procurements of materials or equipment, each potential subcontractor or supplier shall be notified by the RECIPIENT of the RECIPIENT'S obligations under this Agreement.

d. Information and Reports: The RECIPIENT will provide all information and reports required by the Regulations, or orders and instructions issued pursuant thereto, and will permit access to its books, records, accounts, other sources of information, and its facilities as may be determined by the Department or the Federal Highway Administration to be pertinent to ascertain compliance with such Regulations, orders and instructions. Where any information required of the RECIPIENT is in the exclusive possession of another who fails or refuses to furnish this information, the RECIPIENT shall so certify to the Department, or the Federal Highway Administration as appropriate, and shall set forth what efforts it has made to obtain the information.

e. Sanctions for Noncompliance: In the event of the RECIPIENT'S noncompliance with the nondiscrimination provisions of this Agreement, the Department shall impose such contract sanctions as it or the Federal Highway Administration may determine to be appropriate, including but not limited to:

    1) withholding of payments to the RECIPIENT under this Agreement until the RECIPIENT complies, and/or

2) cancellation, termination or suspension of this Agreement, in whole or in part.

f. Incorporation of Provisions: The RECIPIENT will include the provisions of paragraphs "a" through "e" in every subcontract, including procurements of materials and leases of equipment, unless exempt by the Regulations, order or instructions issued pursuant thereto. The RECIPIENT will take such action with respect to any subcontractor or procurement as the Department or the Federal Highway Administration may direct as a means of enforcing such provisions including sanctions for noncompliance: Provided, however, in the event the RECIPIENT becomes involved in, or is threatened with, litigation with a subcontractor or supplier as a result of such direction, the RECIPIENT may request the Department to enter into such litigation to protect the interests of the Department and, in addition, the RECIPIENT may request the United States to enter into such litigation to protect the interests of the United States.

CERTIFICATION REGARDING NON-SEGREGATED FACILITIES: By the execution of this Agreement, the RECIPIENT certifies that it does not maintain or provide for its employees any segregated facilities at any of its establishments, and that it does not permit its employees to perform their services at any location, under its control, where segregated facilities are maintained. It certifies further that it will not maintain or provide for its employees any segregated facilities at any of its establishments, and that it will not permit its employees to perform their services at any location under its control, where segregated facilities are maintained. The RECIPIENT further certifies that no employee will be denied access to adequate facilities on the basis of sex or disability. As used in this certification, the term "segregated facilities" means any waiting rooms, work areas, restrooms and washrooms, restaurants and other eating areas, time clocks, locker rooms and other storage or dressing areas, parking lots, drinking fountains, recreation or entertainment areas, transportation, and housing facilities provided for employees which are segregated by explicit directive or are in fact segregated on the basis of race, creed, color, national origin, age or handicap, because of habit, local custom or otherwise. It agrees that, except where it has obtained identical certification from proposed subcontractors and material suppliers for specific time periods, it will obtain identical certification from proposed subcontractors or material suppliers prior to the award of subcontracts or the consummation of material supply agreements exceeding ten thousand dollars, and that it will retain such certifications in its files.

TDD/TTY EQUIPMENT FOR THE DEAF: When seeking public participation through the maintenance of a toll free hot line number and/or publishing project-related materials, the RECIPIENT agrees to ensure that all citizens have equally effective communication. The RECIPIENT agrees to provide or identify a telecommunications device for the deaf/teletypewriter (TDD/TTY) or acceptable means of telephone access for individuals with impaired speech or hearing. The RECIPIENT will provide notice of a TDD/TTY number whenever a standard telephone number is provided.

DISADVANTAGED BUSINESS ENTERPRISES: The RECIPIENT, its agents, employees, assigns, or successors, and any person or firm or agency of whatever nature with whom it may contract or make an agreement, shall comply with the provisions of Section 110.04 Roads and Bridges Specification pertaining
to the Use of Minority Business Enterprises. The RECIPIENT will take all necessary and reasonable steps to ensure that minority/female owned firms have the maximum opportunity to compete for and perform contracts and subcontracts under this Agreement.

A Disadvantaged Business Enterprise ("DBE") is a business certified in accordance with the guidelines of 49 CFR, Part 26, as amended, by the United States Department of Transportation

designated and approved agency. A listing of certified firms can be located at www.DMBE.state.va.us or by contacting the Department of Minority Business Enterprises, 200-202 9th Street, 11th Floor, Richmond, Virginia 23219, or by calling (804) 786-6585.

REPORTING

The RECIPIENT will provide the Departments' DCRM with information on each certified minority or female owned firm contracted or subcontracted work. This information will include: name of firm, type of certified firm, type of work performed, dates of work, dollar value of contract/subcontract and dates payment was made for work. This information needs to be maintained and submitted to the appropriate DCRM no later than the first day of the first month of federal fiscal quarter commencing on October 1st.

ON THE JOB TRAINING (OJT) PROGRAM: The RECIPIENT, its agents, employees, assigns, or successors, and any person, firm or agency of whatever nature with whom it may contract or make an agreement, shall comply with the special training provisions in accordance with Section 518 of Roads and Bridges Specifications. The RECIPIENT shall take all necessary and reasonable steps to ensure training and upgrading of minorities, women, veterans, and other disadvantaged persons toward achieving journeymen status within a given construction trade. The program seeks to reduce overhead costs associated with training through a stipend reimbursement to the contractor while offering the opportunity to enhance short and long term workforce needs. The current OJT reimbursement rate is three dollars per trainee hour.

The OJT program requires full utilization of all available training and skill-improvement opportunities to assure the increased participation of minority groups and disadvantaged persons and women in all phases of the highway construction industry. It is the intent that each contractor's workforce and construction site should reflect the same diversity as the community.

TRAINEE GOALS

The DCRM will set a trainee goal in accordance with guidelines outlined in Section 518 of Roads and Bridges Specifications on each project. The RECIPIENT will contact the DCRM prior to the advertisement of the contract to obtain the trainee goal. The DCRM will approve all trainee enrollments to ensure that disadvantaged persons are given opportunities for training. Trainee work classifications and the requirements of each will follow those already developed by the Virginia Transportation Construction Alliance (VTCA). Copies of the OJT Trainee Classification Booklet can be obtained by contacting the DCRO.

MONITORING OF OJT PROGRAM

VDOT requires that the RECIPIENT maintain records and documents of trainee enrollments to include: name of trainee, sex, gender, trainee work classification, hourly wage rates, start date, completion date and wage increments as training progressed. This information will include reason(s) trainees do not complete the training program and number of drop-outs and terminations prior to completion of the training program.

The RECIPIENT will compile OJT records and submit them on a quarterly basis to the appropriate District Civil Rights Manager for each locality. Documentation will be submitted no

later than the first day of the first month following the federal fiscal year quarter, which commences October 1st. The RECIPIENT will submit an annual report to the appropriate District Civil Rights Manager no later than the third of each January for the preceding calendar year.

The RECIPIENT will maintain records and documents supporting the reimbursements to contractors for each trainee hour achieved via the OJT program. These records will include: contractor's name, project number, location of project, trainee goal for the contract, name of trainee(s), trainee(s) work classifications, number of hours completed by each trainee(s), and dollar amount paid to the contractor. Trainee Certificates will be presented to each trainee completing the OJT program. It is recommended that copies of these certificates be part of the OJT trainee records.

CONTRACTOR COMPLIANCE

The RECIPIENT will ensure that all contractors and subcontractors awarded work will meet contractual Equal Opportunity requirements under Section 110.03 (Equal Employment Opportunity) of Roads and Bridges Specifications and Title VI of the Civil Rights Act of 1964, as amended. All contractors and subcontractors will submit to the DCRM the required information such as EO Policy, EO Liaison Officer, company employment and monthly project site employment reports as indicated in Section 110.03.

The Virginia Department of Transportation Civil Rights Division will monitor for adherence to Contractor Compliance.

The RECIPIENT will forward copies of all awarded contracts to the appropriate DCRM to initiate the monitoring process. The monitoring process includes: project site visits, employee interviews, and review of documentation (subcontracts, lease agreements, material tickets, etc.). Formal Contractor Compliance Equal Opportunity Reviews will be conducted by the DCRM as needed.

REPORTING

The RECIPIENT, its contractors and subcontractors having a contract or subcontract of at least $10,000 or more is required to submit a monthly employment report the first three months after construction begins and an annual employment report to the CRD in accordance with Section 110.03 of Roads and Bridges Specifications. This information will be submitted to the DCRM indicating number of employees in each work classification, their race and sex. All employees on site must be accounted for to include men and women, both journeymen level, trainees and apprentices.

The monthly reports will be submitted to each DCRM no later than the fifth of the month reflecting the previous months project site representation.

The annual employment report will be submitted to each DCRM for each state project no later than the second week of each August and should reflect all employees on site during the third week of July during which work is performed.

All reports indicating race will reflect the categories specified in Section 110.04 of Roads and Bridges Specifications.

RECORD KEEPING

The LOCALITY will maintain all records pertaining to the individual projects for three years after completion of each project. Records shall include but not be limited to contracts, subcontractors, purchase orders, material delivery tickets, lease agreements, joint check agreements, payments made to contractors, inspections, and permits. This is in accordance with the Department's Record Retention Schedule.

The LOCALITY shall provide all information and reports required by the regulations or directives issued pursuant thereto, and shall permit access to its books, records, accounts, and other sources of information, and its facilities as may be determined by the DEPARTMENT to be pertinent to ascertain compliance with such regulations, orders, and requirements.

The Department's Civil Rights Division or Office of Inspector General Auditing Division will perform audits as needed to ensure compliance with all guidelines.

Form C-104
Rev. 7-13-05

COMMONWEALTH OF VIRGINIA
DEPARTMENT OF TRANSPORTATION

PROJECT:

FHWA:

This form must be completed, signed and returned with bid; and failure to do so may result in the rejection of your bid. **THE CONTRACTOR SHALL AFFIRM THE FOLLOWING STATEMENT EITHER BY SIGNING THE AFFIDAVIT AND HAVING IT NOTARIZED OR BY SIGNING THE UNSWORN DECLARATION UNDER PENALTY OF PERJURY UNDER THE LAWS OF THE UNITED STATES.** A SEPARATE FORM MUST BE SUBMITTED BY EACH PRINCIPAL OF A JOINT VENTURE BID.

STATEMENT, In preparation and submission of this bid, I, the firm, corporation or officers, agents or employees thereof did not, either directly or indirectly, enter into any combination or arrangement with any persons, firm or corporation or enter into any agreement, participate in any collusion, or otherwise take any action in the restraint of free, competitive bidding in violation of the Sherman Act (15 U.S.C. Section 1) or Article 1.1 or Chapter 12 of Title 18.2 (Virginia Governmental Frauds Act), Sections 59.1-9.1 through 59.1-9.17 or Sections 59.1-68.6 through 59.1-68.8 of the Code of Virginia.

AFFIDAVIT

The undersigned is duly authorized by the bidder to make the foregoing statement to be filed with bids submitted on behalf of the bidder for contracts to be let by the Commonwealth Transportation Board.

Signed at _____ , this ____ day of _____ , 20 ____
County (City), STATE

_____ By: _____ _____
(Name of Firm) (Signature) Title (print)

STATE of _____ COUNTY (CITY) of _____
To-wit:

I _____ , a Notary Public in and for the State and County(City) aforesaid, hereby certify that this day _____ personally appeared before me and made oath that he is duly authorized to make the above statements and that such statements are true and correct.

Subscribed and sworn to before me this _____ day of _____ , 20 _____

_____ My Commission expires _____
Notary Public

OR
UNSWORN DECLARATION

The undersigned is duly authorized by the bidder to make the foregoing statement to be filed with bids submitted on behalf of the bidder for contracts to be let by the Commonwealth Transportation Board.

Signed at _____ , this ____ day of _____ , 20 ____
County (City), STATE

_____ By: _____ _____
(Name of Firm) (Signature) Title (print)

Form C-105
Rev. 7-13-05

COMMONWEALTH OF VIRGINIA
DEPARTMENT OF TRANSPORTATION
AFFIDAVIT

PROJECT:

FHWA:

This form must be completed, signed, notarized and returned with bid; and failure to do so, may result in the rejection of your bid. A separate form must be submitted by each principal of a joint venture bid.

1. I, the firm, corporation or officers, agents or employees thereof have neither directly nor indirectly entered into any combination or arrangement with any person, firm or corporation or entered into any agreement, participated in any collusion, or otherwise taken any action in restraint of free competitive bidding in connection with such contract, the effect of which is to prevent competition or increase the cost of construction or maintenance of roads or bridges.

   During the preceding twelve months, I (we) have been a member of the following Highway Contractor's Associations, as defined in Section 33.1-336 of the Code of Virginia (1970). (If none, so state).

NAME	Location of Principal Office
_____	_____
_____	_____
_____	_____

2. I (we) have _____, have not _____, participated in a previous contract or subcontract subject to the equal opportunity clause, as required by Executive Orders 10925, 11114, or 11246, and that I/We have _____, have not _____, filed with the joint Reporting Committee, the Director of the Office of Federal Contract Compliance, a Federal Government contracting or administering agency, or the former President's Committee on Equal Employment Opportunity, all reports due under the applicable filing requirements.

   Note: The above certification is required by the Equal Employment Opportunity Regulations of the Secretary of Labor [41 CFR 60-1.7(b)(1)], and must be submitted by bidders and proposed subcontractors only in connection with contracts and subcontracts which are subject to the equal opportunity clause. Contracts and subcontracts which are exempt from the equal opportunity clause are set forth in 41 CFR 60-1.5. (Generally only contract or subcontracts of $10,000 or under are exempt.)

   Currently, Standard Form 100 (EEO-1) is the only report required by the Executive Orders or their implementing regulations.

Proposed prime contractors and subcontractors who have participated in a previous contract or subcontract subject to the Executive Orders and have not filed the required reports should note that 41 CFR 60-1.7(b) (1) prevents the award of contract and subcontract unless such contractor submits a report covering the delinquent period or such other period specified by the Federal Highway Administration or by the Director, Office of Federal Contract Compliance, U.S. Department of Labor.

(Continued)

ORDER NO.:
CONTRACT ID. NO.:

3. The bidder certifies to the best of its knowledge and belief, that it and its principals:

(a) Are not presently debarred, suspended, proposed for debarment, declared ineligible or voluntarily excluded from covered transactions by any Federal department or agency;

(b) Have not within a three year period preceding this proposal been convicted of or had a civil judgement rendered against them for commission of fraud or a criminal offence in connection with obtaining, attempting to obtain, or performing a public (Federal, State or local) transaction or contract under a public transaction; violation of Federal or State antitrust statutes or commission of embezzlement, theft, forgery, bribery, falsification or destruction of records, making false statements, or receiving stolen property;

(c) Are not presently indicted for or otherwise criminally or civilly charged by a governmental entity (Federal, State or local) with commission of any of the offenses enumerated above; and

(d) Where the bidders is unable to certify to any of the statements in this certification, the bidder shall show an explanation below.

Explanations will not necessarily result in denial of award, but will be considered in determining bidder responsibility. For any explanation noted, indicate below to whom it applies, initiating agency, and dates of action. Providing false information may result in federal criminal prosecution or administration sanctions. The bidder shall provide immediate written notice to the Department if at any time the bidder learns that its certification was erroneous when submitted or has become erroneous by reason of change circumstances.

The undersigned is duly authorized by the bidder to make the foregoing statements to be filed with bids submitted on behalf of the bidder for contracts to be let by the Commonwealth Transportation Board.

Signed at _____ , this ____ day of _____ , 20 ____
County (City), STATE

_____ By: _____ _____
(Name of Firm) (Signature) Title (print)

STATE of _____ COUNTY (CITY) of _____
To-wit:

I _____ , a Notary Public in and for the State and County(City) aforesaid, hereby certify that this day _____ personally appeared before me and made oath that he is duly authorized to make the above statements and that such statements are true and correct.

Subscribed and sworn to before me this _____ day of _____ , 20 _____

_____ My Commission expires _____
Notary Public

Form C-48
Rev. 2-23-11

COMMONWEALTH OF VIRGINIA
DEPARTMENT OF TRANSPORTATION
SUBCONTRACTOR/SUPPLIER SOLICITATION AND UTILIZATION FORM (ALL BIDDERS)

PROJECT NO. _____ **CONTRACT I.D. NO.** _____

FHWA NO. _____ **DATE SUBMITTED** _____

All bidders, including DBEs bidding as Prime Contractors, shall complete and submit the following information as requested in this form within ten (10) business days after the opening of bids.

The bidder certifies this form accurately represents its solicitation and utilization or non-utilization, as indicated, of the firms listed below for performance of work on this contract. The bidder also certifies he/she has had direct contact with the named firms regarding participation on this project.

BIDDER _____ **SIGNATURE** _____

TITLE _____

SUBCONTRACTOR/SUPPLIER SOLICITATION AND UTILIZATION (ALL)

VENDOR NUMBER	NAME OF SUBCONTRACTOR/SUPPLIER	TELEPHONE NUMBER	DBE OR NON-DBE	UTILIZED (Y/N)

NOTE: ATTACH ADDITIONAL PAGES, IF NECESSARY.

BIDDER MUST SIGN EACH ADDITIONAL SHEET TO CERTIFY ITS CONTENT AND COMPLETION OF FORM.

COMM0NWEALTH OF VIRGINIA
DEPARTMENT OF TRANSPORTATION

DBE GOOD FAITH EFFORTS DOCUMENTATION

--DO NOT DETACH--

THIS INFORMATION MUST BE SUBMITTED WITHIN 2 DAYS AFTER BID OPENING IF YOUR BID DOES NOT MEET THE PROJECT DBE REQUIREMENTS, OR WHEN REQUESTED BY VDOT

CONTRACT I.D. NUMBER_____

PROJECT NUMBER_____

FHWA NUMBER_____

DISTRICT_____

DATE BID SUBMITTED_____

BIDDER'S NAME_____

SIGNATURE_____

TITLE_____

VENDOR NUMBER_____

DBE GOAL FROM BID PROPOSAL_____

COMM0NWEALTH OF VIRGINIA
DEPARTMENT OF TRANSPORTATION

DBE GOOD FAITH EFFORTS DOCUMENTATION

CONTRACT I.D. NO._____**DATE SUBMITTED**_____

IF THE DBE GOAL ESTABLISHED FOR THIS CONTRACT HAS NOT BEEN MET OR VDOT REQUESTS THE SUBMITTAL THEREOF, THE BIDDER IS REQUIRED TO SUBMIT GOOD FAITH EFFORTS AS OUTLINED IN THIS DOCUMENT.

THE BIDDER ACKNOWLEDGES AND CERTIFIES THAT THIS FORM ACCURATELY REPRESENTS THE INFORMATION CONTAINED HEREIN.

BIDDER_____**SIGNATURE**_____

TITLE_____

NAMES OF CERTIFIED DBEs AND THE DATES ON WHICH THEY WERE SOLICITED TO BID ON THIS PROJECT

INCLUDE THE ITEMS OF WORK OFFERED AND THE DATES AND METHODS USED FOR FOLLOWING UP INITIAL SOLICITATIONS TO DETERMINE WHETHER OR NOT DBEs WERE INTERESTED.

NAMES AND VENDOR NUMBERS OF DBEs SOLICITED	DATE OF INITIAL SOLICITATION	ITEM(S) OF WORK	FOLLOW-UP METHODS AND DATES

NOTE: ATTACH ADDITIONAL PAGES IF NECESSARY

ATTACH COPIES OF SOLICITATIONS, TELEPHONE RECORDS, FAX CONFIRMATIONS, ELECTRONIC INFORMATION, ETC.

COMM0NWEALTH OF VIRGINIA
DEPARTMENT OF TRANSPORTATION

DBE GOOD FAITH EFFORTS DOCUMENTATION

CONTRACT I.D. NO._____**DATE SUBMITTED**_____

IF THE DBE GOAL ESTABLISHED FOR THIS CONTRACT HAS NOT BEEN MET OR VDOT REQUESTS THE SUBMITTAL THEREOF, THE BIDDER IS REQUIRED TO SUBMIT GOOD FAITH EFFORTS AS OUTLINED IN THIS DOCUMENT.

THE BIDDER ACKNOWLEDGES AND CERTIFIES THAT THIS FORM ACCURATELY REPRESENTS THE INFORMATION CONTAINED HEREIN.

BIDDER_____**SIGNATURE**_____

TITLE_____

TELEPHONE LOG

DBE(s) CALLED	TELEPHONE NUMBER	DATE CALLED	TIME CALLED	CONTACT PERSON OR VOICE MAIL STATUS

NOTE: ATTACH ADDITIONAL PAGES IF NECESSARY

COMM0NWEALTH OF VIRGINIA
DEPARTMENT OF TRANSPORTATION

DBE GOOD FAITH EFFORTS DOCUMENTATION

CONTRACT I.D. NO._____**DATE SUBMITTED**_____

IF THE DBE GOAL ESTABLISHED FOR THIS CONTRACT HAS NOT BEEN MET OR VDOT REQUESTS THE SUBMITTAL THEREOF, THE BIDDER IS REQUIRED TO SUBMIT GOOD FAITH EFFORTS AS OUTLINED IN THIS DOCUMENT.

THE BIDDER ACKNOWLEDGES AND CERTIFIES THAT THIS FORM ACCURATELY REPRESENTS THE INFORMATION CONTAINED HEREIN.

BIDDER_____**SIGNATURE**_____

TITLE_____

ITEM(S) OF WORK THAT THE BIDDER MADE AVAILABLE TO DBE FIRMS

IDENTIFY THOSE ITEM(S) OF WORK THAT THE BIDDER MADE AVAILABLE TO DBE FIRMS OR THOSE ITEM(S) THE BIDDER IDENTIFIED AND DETERMINED TO SUBDIVIDE INTO ECONOMICALLY FEASIBLE UNITS TO FACILITATE DBE PARTICIPATION. FOR EACH ITEM LISTED, SHOW THE DOLLAR VALUE AND PERCENTAGE OF THE TOTAL CONTRACT AMOUNT. IT IS THE BIDDER'S RESPONSIBILITY TO DEMONSTRATE THAT SUFFICIENT WORK TO MEET THE GOAL WAS MADE AVAILABLE TO DBE FIRMS.

ITEM(S) OF WORK MADE AVAILABLE	BIDDER NORMALLY PERFORMS ITEM(S) (Y/N)	ITEM(S) BROKEN DOWN TO FACILITATE PARTICIPATION (Y/N)	AMOUNT IN DOLLARS	PERCENTAGE OF CONTRACT

NOTE: INFORMATION REQUIRED FOR THIS SECTION CONTINUED ON SHEET 5
ATTACH ADDITIONAL PAGES IF NECESSARY

COMM0NWEALTH OF VIRGINIA
DEPARTMENT OF TRANSPORTATION

DBE GOOD FAITH EFFORTS DOCUMENTATION

CONTRACT I.D. NO._____DATE SUBMITTED_____

IF THE DBE GOAL ESTABLISHED FOR THIS CONTRACT HAS NOT BEEN MET OR VDOT REQUESTS THE SUBMITTAL THEREOF, THE BIDDER IS REQUIRED TO SUBMIT GOOD FAITH EFFORTS AS OUTLINED IN THIS DOCUMENT.

THE BIDDER ACKNOWLEDGES AND CERTIFIES THAT THIS FORM ACCURATELY REPRESENTS THE INFORMATION CONTAINED HEREIN.

BIDDER_____SIGNATURE_____

TITLE_____

ADDITIONAL INFORMATION REGARDING ITEM(S) OF WORK THAT THE BIDDER MADE AVAILABLE TO DBE FIRMS (Continued From Sheet 4)

ITEM(S) OF WORK MADE AVAILABLE, NAMES OF SELECTED FIRMS AND DBE STATUS, DBEs THAT PROVIDED QUOTES, PRICE QUOTE FOR EACH FIRM, AND THE PRICE DIFFERENCE FOR EACH DBE IF THE SELECTED FIRM IS NOT A DBE.

ITEM(S) OF WORK MADE AVAILABLE(CONT.)	NAME OF SELECTED FIRM AND VENDOR NUMBER	DBE OR NON-DBE	NAME OF REJECTED FIRM(S)	QUOTE IN DOLLARS	PRICE DIFFERENCE IN DOLLARS

NOTE: ATTACH ADDITIONAL PAGES IF NECESSARY.

IF THE FIRM SELECTED FOR THE ITEM IS NOT A DBE, PROVIDE THE REASON(S) FOR THE SELECTION ON A SEPARATE PAGE AND ATTACH.

PROVIDE NAMES, ADDRESSES, AND TELEPHONE NUMBERS FOR THE FIRMS LISTED ABOVE.

COMM0NWEALTH OF VIRGINIA
DEPARTMENT OF TRANSPORTATION

DBE GOOD FAITH EFFORTS DOCUMENTATION

CONTRACT I.D. NO._____**DATE SUBMITTED**_____

IF THE DBE GOAL ESTABLISHED FOR THIS CONTRACT HAS NOT BEEN MET OR VDOT REQUESTS THE SUBMITTAL THEREOF, THE BIDDER IS REQUIRED TO SUBMIT GOOD FAITH EFFORTS AS OUTLINED IN THIS DOCUMENT.

THE BIDDER ACKNOWLEDGES AND CERTIFIES THAT THIS FORM ACCURATELY REPRESENTS THE INFORMATION CONTAINED HEREIN.

BIDDER_____**SIGNATURE**_____

TITLE_____

ADVERTISEMENTS OR PROOFS OF PUBLICATION.

NAMES AND DATES OF EACH PUBLICATION IN WHCH A REQUEST FOR DBE PARTICIPATION FOR THE PROJECT WAS PLACED BY THE BIDDER. ATTACH COPIES OF PUBLISHED ADVERTISEMENTS OR PROOFS OF PUBLICATION.

PUBLICATIONS	DATES OF ADVERTISEMENT

NOTE: ATTACH ADDITIONAL PAGES IF NECESSARY

COMM0NWEALTH OF VIRGINIA
DEPARTMENT OF TRANSPORTATION

DBE GOOD FAITH EFFORTS DOCUMENTATION

CONTRACT I.D. NO._____DATE SUBMITTED_____

IF THE DBE GOAL ESTABLISHED FOR THIS CONTRACT HAS NOT BEEN MET OR VDOT REQUESTS THE SUBMITTAL THEREOF, THE BIDDER IS REQUIRED TO SUBMIT GOOD FAITH EFFORTS AS OUTLINED IN THIS DOCUMENT.

THE BIDDER ACKNOWLEDGES AND CERTIFIES THAT THIS FORM ACCURATELY REPRESENTS THE INFORMATION CONTAINED HEREIN.

BIDDER_____SIGNATURE_____

TITLE_____

NAMES OF AGENCIES CONTACTED TO PROVIDE ASSISTANCE

NAMES OF AGENCIES (SEE SPECIAL PROVISION FOR 107.15) AND THE DATES THESE AGENCIES WERE CONTACTED TO PROVIDE ASSISTANCE IN CONTACTING, RECRUITING, AND USING DBE FIRMS. IF THE AGENCIES WERE CONTACTED IN WRITING, ATTACH COPIES OF SUPPORTING DOCUMENTS.

NAME OF AGENCY	METHOD AND DATE OF CONTACT	RESULTS

NOTE: ATTACH ADDITIONAL PAGES IF NECESSARY**.**

COMM0NWEALTH OF VIRGINIA
DEPARTMENT OF TRANSPORTATION

DBE GOOD FAITH EFFORTS DOCUMENTATION

CONTRACT I.D. NO._____DATE SUBMITTED_____

IF THE DBE GOAL ESTABLISHED FOR THIS CONTRACT HAS NOT BEEN MET OR VDOT REQUESTS THE SUBMITTAL THEREOF, THE BIDDER IS REQUIRED TO SUBMIT GOOD FAITH EFFORTS AS OUTLINED IN THIS DOCUMENT.

THE BIDDER ACKNOWLEDGES AND CERTIFIES THAT THIS FORM ACCURATELY REPRESENTS THE INFORMATION CONTAINED HEREIN.

BIDDER_____SIGNATURE_____

TITLE_____

TECHNICAL ASSISTANCE AND INFORMATION PROVIDED TO DBEs

EFFORTS MADE TO PROVIDE INTERESTED DBEs WITH ADEQUATE INFORMATION ABOUT THE PLANS, SPECIFICATIONS, AND REQUIREMENTS OF THE BID DOCUMENTS TO ASSIST THE DBEs IN RESPONDING TO A SOLICITATION.

IDENTIFY THE DBEs ASSISTED, THE INFORMATION PROVIDED, AND THE DATE OF CONTACT. ATTACH COPIES OF SUPPORTING DOCUMENTS.

DBEs ASSISTED	INFORMATION PROVIDED	DATE OF CONTACT

NOTE: ATTACH ADDITIONAL PAGES IF NECESSARY.

COMM0NWEALTH OF VIRGINIA
DEPARTMENT OF TRANSPORTATION

DBE GOOD FAITH EFFORTS DOCUMENTATION

CONTRACT I.D. NO._____**DATE SUBMITTED**_____

IF THE DBE GOAL ESTABLISHED FOR THIS CONTRACT HAS NOT BEEN MET OR VDOT REQUESTS THE SUBMITTAL THEREOF, THE BIDDER IS REQUIRED TO SUBMIT GOOD FAITH EFFORTS AS OUTLINED IN THIS DOCUMENT.

THE BIDDER ACKNOWLEDGES AND CERTIFIES THAT THIS FORM ACCURATELY REPRESENTS THE INFORMATION CONTAINED HEREIN.

BIDDER_____**SIGNATURE**_____

TITLE_____

EFFORTS MADE TO ASSIST DBEs OBTAIN BONDING, LINES OF CREDIT, INSURANCE, ETC.

EFFORTS MADE TO PROVIDE INTERESTED DBEs IN OBTAINING BONDING, LINES OF CREDIT, INSURANCE, NECESSARY EQUIPMENT, SUPPLIES, MATERIALS, OR RELATED ASSISTANCE OR SERVICES, EXCLUDING SUPPLIES AND EQUIPMENT THE SUBCONTRACTOR PURCHASES OR LEASES FROM THE PRIME CONTRACTOR OR ITS AFFILIATES.

IDENTIFY THE DBEs ASSISTED, THE ASSISTANCE OFFERED, AND THE DATES OF SERVICES OFFERED AND PROVIDED. ATTACH COPIES OF SUPPORTING DOCUMENTS.

DBEs ASSISTED	ASSISTANCE OFFERED	DATES SERVICES OFFERED AND/OR PROVIDED

NOTE: ATTACH ADDITIONAL PAGES IF NECESSARY.

COMM0NWEALTH OF VIRGINIA
DEPARTMENT OF TRANSPORTATION

DBE GOOD FAITH EFFORTS DOCUMENTATION

CONTRACT I.D. NO._____**DATE SUBMITTED**_____

IF THE DBE GOAL ESTABLISHED FOR THIS CONTRACT HAS NOT BEEN MET OR VDOT REQUESTS THE SUBMITTAL THEREOF, THE BIDDER IS REQUIRED TO SUBMIT GOOD FAITH EFFORTS AS OUTLINED IN THIS DOCUMENT.

THE BIDDER ACKNOWLEDGES AND CERTIFIES THAT THIS FORM ACCURATELY REPRESENTS THE INFORMATION CONTAINED HEREIN.

BIDDER_____**SIGNATURE**_____

TITLE_____

ADDITIONAL DATA TO SUPPORT DEMONSTRATION OF GOOD FAITH EFFORTS

ADDITIONAL DATA TO SUPPORT DEMONSTRATION OF GOOD FAITH EFFORTS

NOTE: ATTACH ADDITIONAL PAGES, IF NECESSARY

Form C-111
Rev. 2-15-11

COMMONWEALTH OF VIRGINIA
DEPARTMENT OF TRANSPORTATION
MINIMUM DBE REQUIREMENTS

PROJECT NO. _____

FHWA NO. _____

*** * * INSTRUCTIONS * * ***

THIS FORM CAN BE USED BY THE CONTRACTOR TO SUBMIT THE NAMES OF DBE FIRMS TO BE UTILIZED ON THE PROJECT. THE CONTRACTOR SHALL INDICATE THE DESCRIPTION OF THE CATEGORY (S, M, SP or H) AND THE TYPE OF WORK THAT EACH DBE WILL PERFORM AND THE ALLOWABLE CREDIT PER ITEM(S). ADDITIONAL SHEETS TO SHOW THE ALLOWABLE CREDIT PER ITEM MAY BE ATTACHED IF NECESSARY. **PLEASE NOTE:** THE AMOUNT OF ALLOWABLE CREDIT FOR A DBE SUPPLIER IS 60% OF THE TOTAL COST OF THE MATERIALS OR SUPPLIES OBTAINED AND 100% FOR A DBE MANUFACTURER OF THE MATERIALS AND SUPPLIES OBTAINED. A CONTRACTOR MAY COUNT 100% OF THE FEES PAID TO A DBE HAULER FOR THE DELIVERY OF MATERIALS AND SUPPLIES TO THE PROJECT SITE, BUT NOT FOR THE COST OF THE MATERIALS AND SUPPLIES THEMSELVES.

DBE REQUIREMENT _____ **%**

PERCENT ATTAINED BY BIDDER _____ **%**

NAMES(S) AND CERTIFICATION NO. OF DBE(S) TO BE USED	USED AS SUBCONTR. (S) MFG. (M) SUPPLIER (SP) HAULER (H)	TYPE OF WORK AND ITEM NO(S)	$ AMOUNT OF ALLOWABLE CREDIT PER ITEM
		TOTAL	**$**

TOTAL CONTRACT VALUE $ _____ x REQUIRED DBE _____ % = $ _____

I/WE CERTIFY THAT THE PROPOSED DBE(S) SUBMITTED WILL BE USED ON THIS CONTRACT AS STATED HEREON AND ASSURE THAT DURING THE LIFE OF THE CONTRACT. I/WE WILL MEET OR EXCEED THE PARTICIPATION ESTABLISHED HEREON BY THE DEPARTMENT.

_____ BY _____
BIDDER SIGNATURE

_____ BY _____
TITLE DATE

COMMONWEALTH OF VIRGINIA
DEPARTMENT OF TRANSPORTATION
CERTIFICATION OF BINDING AGREEMENT
WITH
DISADVANTAGED BUSINESS ENTERPRISE FIRMS

Project No.:

Federal Project No.:

This form is to be submitted in accordance with the Department's Special Provision for Section 107.15.

It is hereby certified by the below signed Contractors that there exists a written quote, acceptable to the parties involved preliminary to a binding subcontract agreement stating the details concerning the work to be performed and the price which will be paid for the aforementioned work. This document is not intended to, nor should it be construed to, contain the entire text of the agreement between the contracting parties. This document does not take the place of, nor may it be substituted for, an official subcontracting agreement in those situations that may require such an agreement. A copy of the fully executed *subcontract agreement* shall be submitted to the Engineer within fourteen (14) business days after contract execution.

It is further certified that the aforementioned mutually acceptable quote and fully executed subcontract agreement represent the entire agreement between the parties involved and that no conversations, verbal agreements, or other forms of non-written representations shall serve to add to, delete, or modify the terms as stated.

The prime Contractor further represents that the aforementioned mutually acceptable quote and fully executed subcontract agreement shall remain on file for a period of not less than one year following completion of the prime's contract with the Department or for such longer period as provisions of governing Federal or State law or regulations may require. For purposes of this form, the term Prime Contractor shall refer to any Contractor utilizing a DBE subcontractor, regardless of tier, in which they are claiming DBE credit toward the contract goal.

Contractors further jointly and severally represent that said binding agreement is for the performance of a "commercially useful function" as that term is employed in 49 C.F.R. Part 26.55 (c), (d).

TO BE SIGNED BY THE SUBCONTRACTOR TO THE PRIME CONTRACTOR, AND ANY LOWER TIER SUBCONTRACTORS HAVING A CONTRACT WITH THE BELOW NAMED DBE FIRM

Prime Contractor _____

By: _____ _____
Signature Title

Date: _____

First Tier Subcontractor if Applicable _____

By: _____ _____
Signature Title

Date: _____

Second Tier Subcontractor if Applicable _____

By: _____ _____
Signature Title

Date: _____

Third Tier Subcontractor if Applicable _____

By: _____ _____
Signature Title

Date: _____

DBE Contractor _____

By: _____ _____
Signature Title

Date: _____

S107HF1-0211

VIRGINIA DEPARTMENT OF TRANSPORTATION
SPECIAL PROVISION FOR
SECTION 107.15

December 10, 2010

Section 107.15 of the Specifications is replaced by the following:

Section 107.15—Use of Disadvantaged Business Enterprises (DBEs)

A. Disadvantaged Business Enterprise (DBE) Program Requirements

Any Contractor, subcontractor, supplier, DBE firm, and contract surety involved in the performance of work on a federal-aid contract shall comply with the terms and conditions of the United States Department of Transportation (USDOT) DBE Program as the terms appear in Part 26 of the Code of Federal Regulations (49 CFR as amended), the USDOT DBE Program regulations; and the Virginia Department of Transportation's (VDOT or the Department) Road and Bridge Specifications and DBE Program rules and regulations.

For the purposes of this provision, Contractor is defined as the Prime Contractor of the contract; and sub-contractor is defined as any DBE supplier, manufacturer, or subcontractor performing work or furnishing material, supplies or services to the contract. The Contractor shall physically include this same contract provision in every supply or work/service subcontract that it makes or executes with a subcontractor having work for which it intends to claim credit.

In accordance with 49 CFR Part 26 and VDOT's DBE Program requirements, the Contractor, for itself and for its subcontractors and suppliers, whether certified DBE firms or not, shall commit to complying fully with the auditing, record keeping, confidentiality, cooperation, and anti-intimidation or retaliation provisions contained in those federal and state DBE Program regulations. By bidding on this contract, and by accepting and executing this contract, the Contractor agrees to assume these contractual obligations and to bind the Contractor's subcontractors contractually to the same at the Contractor's expense.

The Contractor or subcontractor shall not discriminate on the basis of race, color, national origin, or sex in the performance of this contract. The Contractor shall carry out applicable requirements of 49 CFR Part 26 in the award, administration, and performance of this contract. Failure by the Contractor to carry out these requirements is a material breach of this contract, which will result in the termination of this contract or other such remedy, as VDOT deems appropriate.

All administrative remedies noted in this provision are automatic unless the Contractor exercises the right of appeal within the required timeframe(s) specified herein. Appeal requirements, processes, and procedures shall be in accordance with guidelines stated herein and current at the time of the proceedings. Where applicable, the Department will notify the Contractor of any changes to the appeal requirements, processes, and procedures after receiving notification of the Contractor's desire to appeal.

All time frames referenced in this provision are expressed in business days unless otherwise indicated. Should the expiration of any deadline fall on a weekend or holiday, such deadline will automatically be extended to the next normal business day.

B. DBE Certification

The only DBE firms eligible to perform work on a federal-aid contract for DBE contract goal credit are firms certified as Disadvantaged Business Enterprises by the Virginia Department of Minority Business Enterprise (DMBE) or the Metropolitan Washington Airports Authority (MWAA) in accordance with federal and VDOT guidelines. DBE firms must be certified in the specific work listed for DBE contract goal credit. A directory listing of certified DBE firms can be obtained from the Virginia Department of Minority Business Enterprise and the Metropolitan Washington Airports Authority Internet websites: *http://www.dmbe.virginia.gov/ ; http://mwaa.com/362.htm*

C. Bank Services

The Contractor and each subcontractor are encouraged to use the services of banks owned and controlled by socially and economically disadvantaged individuals. Such banking services and the fees charged for services typically will not be eligible for DBE Program contract goal credit. Such information is available from the VDOT's Internet Civil Rights Division website:
http://insidevdot/C7/Civil%20Rights/default.aspx

D. DBE Program-Related Certifications Made by Bidders\Contractors

By submitting a bid and by entering into any contract on the basis of that bid, the bidder/Contractor certifies to each of the following DBE Program-related conditions and assurances:

1. That the management and bidding officers of its firm agree to comply with the bidding and project construction and administration obligations of the USDOT DBE Program requirements and regulations of 49 CFR Part 26 as amended, and VDOT's Road and Bridge Specifications and DBE Program requirements and regulations.

2. Under penalty of perjury and other applicable penal law that it has complied with the DBE Program requirements in submitting the bid, and shall comply fully with these requirements in the bidding, award, and execution of the contract.

3. To ensure that DBE firms have been given full and fair opportunity to participate in the performance of the contract. The bidder certifies that all reasonable steps were, and will be, taken to ensure that DBE firms had, and will have, an opportunity to compete for and perform work on the contract. The bidder further certifies that the bidder shall not discriminate on the basis of race, color, age, national origin, or sex in the performance of the contract or in the award of any subcontract. Any agreement between a bidder and a DBE whereby the DBE promises not to provide quotations for performance of work to other bidders is prohibited.

4. As a bidder, good faith efforts were made to obtain DBE participation in the proposed contract at or above the goal for DBE participation established by VDOT. It has submitted as a part of its bid true, accurate, complete, and detailed documentation of the good faith efforts it performed to meet the contract goal for DBE participation. The bidder, by signing and submitting its bid, certifies the DBE participation information submitted within the stated time thereafter is true, correct, and complete, and that the information provided includes the names of all DBE firms that will participate in the contract, the specific line item(s) that each listed DBE firm will perform, and the creditable dollar amounts of the participation of each listed DBE. The specific line item must reference the VDOT line number and item number contained in the proposal.

5. The bidder further certifies, by signing its bid, it has committed to use each DBE firm listed for the specific work item shown to meet the contract goal for DBE participation. Award of the contract will be conditioned upon meeting these and other listed requirements of 49 CFR Part 26.53 and the contract documents. By signing the bid, the bidder certifies on work that it proposes to sublet; it has made good faith efforts to seek out and consider DBEs as potential subcontractors. The bidder shall contact DBEs to solicit their interest, capability, and prices in sufficient time to allow them to respond effectively, and shall retain on file proper documentation to substantiate its good faith efforts. Award of the contract will be conditioned upon meeting these and other listed requirements of 49 CFR Part 26.53 and the contract documents.

6. Once awarded the contract, the Contractor shall make good faith efforts to utilize DBE firms to perform work designated to be performed by DBEs at or above the amount or percentage of the dollar value specified in the bidding documents. Further, the Contractor understands it shall not unilaterally terminate, substitute for, or replace any DBE firm that was designated in the executed contract in whole or in part with another DBE, any non-DBE firm, or with the Contractor's own forces or those of an affiliate of the Contractor without the prior written consent of VDOT as set out within the requirements of this provision.

7. Once awarded the contract, the Contractor shall designate and make known to the Department a liaison officer who is assigned the responsibility of administering and promoting an active and inclusive DBE program as required by 49 CFR Part 26 for DBEs. The designation and identity of this officer need be submitted only once by the Contractor during any twelve (12) month period at the preconstruction conference for the first contract the Contractor has been awarded during that reporting period. The Department will post such information for informational and administrative purposes at VDOT's Internet Civil Rights Division website.

8. Once awarded the contract, the Contractor shall comply fully with all regulatory and contractual requirements of the USDOT DBE Program, and that each DBE firm participating in the contract shall fully perform the designated work items with the DBE's own forces and equipment under the DBE's direct supervision, control, and management. Where a contract exists and where the Contractor, DBE firm, or any other firm retained by the Contractor has failed to comply with federal or VDOT DBE Program regulations and/or their requirements on that contract, VDOT has the authority and discretion to determine the extent to which the DBE contract regulations and\or requirements have not been met, and will assess against the Contractor any remedies available at law or provided in the contract in the event of such a contract breach.

9. In the event a bond surety assumes the completion of work, if for any reason VDOT has terminated the prime Contractor, the surety shall be obligated to meet the same DBE contract terms and requirements as were required of the original prime Contractor in accordance with the requirements of this specification.

E. Disqualification of Bidder

Bidders may be disqualified from bidding for failure to comply with the requirements of this Special Provision, the contract specifications, and VDOT Road and Bridge Specifications.

F. Bidding Procedures

The following bidding procedures shall apply to the contract for DBE Program compliance purposes:

1. **Contract Goal, Good Faith Efforts Specified:** All bidders evidencing the attainment of DBE goal commitment equal to or greater than the required DBE goal established for the project must submit completed Form C-111, Minimum DBE Requirements, and Form C-48, Subcontractor/Supplier Solicitation and Utilization, as a part of the bid documents.

   Form C-111 may be submitted electronically or may be faxed to the Department, but in no case shall the bidder's Form C-111 be received later than 10:00 a.m. the next business day after the time stated in the bid proposal for the receipt of bids. Form C-48 must be received within ten (10) business days after the bid opening.

   If, at the time of submitting its bid, the bidder knowingly cannot meet or exceed the required DBE contract goal, it shall submit Form C-111 exhibiting the DBE participation it commits to attain as a part of its bid documents. The bidder shall then submit Form C-49, DBE Good Faith Efforts Documentation, within two (2) business days after the bid opening.

   The lowest responsive and responsible bidder must submit its properly executed Form C-112, Certification of Binding Agreement, within three (3) business days after the bids are received. DBEs bidding as prime contractors are not required to submit Form C-112 unless they are utilizing other DBEs as subcontractors.

   If, after review of the apparent lowest bid, VDOT determines the DBE requirements have not been met, the apparent lowest successful bidder must submit Form C-49, DBE Good Faith Efforts Documentation, which must be received by the Contract Engineer within two (2) business days after official notification of such failure to meet the aforementioned DBE requirements.

   Forms C-48, C-49, C-111, and C-112 can be obtained from the VDOT website at: *http://vdotforms.vdot.virginia.gov/*

   Instructions for submitting Form C-111 can be obtained from the VDOT website at: *http://www.virginiadot.org/business/resources/const/Exp_DBE_Commitments.pdf*

2. **Bid Rejection:** The failure of a bidder to submit the required documentation within the timeframes specified in the **Contract Goal, Good Faith Efforts Specified** section of this Special Provision may be cause for rejection of that bidder's bid.

   If the lowest bidder is rejected for failure to submit the required documentation in the specified time frames, the Department may award the work to the next lowest bidder, or re-advertise the proposed work at a later date or proceed otherwise as determined by the Commonwealth.

3. **Good Faith Efforts Described:** In order to award a contract to a bidder that has failed to meet DBE contract goal requirements, VDOT will determine if the bidder's efforts were adequate good faith efforts, and if given all relevant circumstances, those efforts were made actively and aggressively to meet the DBE requirements. Efforts to obtain DBE participation are not good faith efforts if they could not reasonably be expected to produce a level of DBE participation sufficient to meet the DBE Program and contract goal requirements.

Good faith efforts may be determined through use of the following list of the types of actions the bidder may make to obtain DBE participation. This is not intended to be a mandatory checklist, nor is it intended to be exclusive or exhaustive. Other factors or types of efforts of similar intent may be relevant in appropriate cases:

(a) Soliciting through reasonable and available means, such as but not limited to, attendance at pre-bid meetings, advertising, and written notices to DBEs who have the capability to perform the work of the contract. Examples include: advertising in at least one daily/weekly/monthly newspaper of general circulation, as applicable; phone contact with a completely documented telephone log, including the date and time called, contact person, or voice mail status; and internet contacts with supporting documentation, including dates advertised. The bidder shall solicit this interest no less than five (5) business days before the bids are due so that the solicited DBEs have enough time to reasonably respond to the solicitation. The bidder shall determine with certainty if the DBEs are interested by taking reasonable steps to follow up initial solicitations as evidenced by documenting such efforts as requested on Form C-49, DBE Good Faith Efforts Documentation.

(b) Selecting portions of the work to be performed by DBEs in order to increase the likelihood that the DBE goals will be achieved. This includes, where appropriate, breaking out contract work items into economically feasible units to facilitate DBE participation, even when the Contractor might otherwise prefer to completely perform all portions of this work in its entirety or use its own forces;

(c) Providing interested DBEs with adequate information about the plans, specifications, and requirements of the contract in a timely manner, which will assist the DBEs in responding to a solicitation;

(d) Negotiating for participation in good faith with interested DBEs;

1. Evidence of such negotiation shall include the names, addresses, and telephone numbers of DBEs that were considered; dates DBEs were contacted; a description of the information provided regarding the plans, specifications, and requirements of the contract for the work selected for subcontracting; and, if insufficient DBE participation seems likely, evidence as to why additional agreements could not be reached for DBEs to perform the work;

2. A bidder using good business judgment should consider a number of factors in negotiating with subcontractors, including DBE subcontractors, and should take a firm's price, qualifications, and capabilities, as well as contract goals, into consideration. However, the fact that there may be some additional costs involved in finding and using DBEs is not sufficient reason for a bidder's failure to meet the contract goal for DBE participation, as long as such costs are reasonable and comparable to costs customarily appropriate to the type of work under consideration. Also, the ability or desire of a bidder to perform the work of a contract with its own organization does not relieve the bidder of the responsibility to make diligent good faith efforts. Bidders are not, however, required to accept higher quotes from DBEs if the price difference can be shown by the bidder to be excessive, unreasonable, or greater than would normally be expected by industry standards;

(e) A bidder cannot reject a DBE as being unqualified without sound reasons based on a thorough investigation of the DBE's capabilities. The DBE's standing within its industry, membership in specific groups, organizations, associations, and political or social affiliations, and union vs. non-union employee status are not legitimate causes

for the rejection or non-solicitation of bids in the bidder's efforts to meet the project goal for DBE participation;

(f) Making efforts to assist interested DBEs in obtaining bonding, lines of credit, or insurance as required by VDOT or by the bidder/Contractor;

(g) Making efforts to assist interested DBEs in obtaining necessary equipment, supplies, materials, or related assistance or services subject to the restrictions contained in these provisions;

(h) Effectively using the services of appropriate personnel from VDOT and from DMBE; available minority/women community or minority organizations; contractors' groups; local, state, and Federal minority/ women business assistance offices; and other organizations as allowed on a case-by-case basis to provide assistance in the recruitment and utilization of qualified DBEs.

G. Documentation and Administrative Reconsideration of Good Faith Efforts

During Bidding: As described in the **Contract Goal, Good Faith Efforts Specified** section of this Special Provision, the bidder must provide Form C-49, DBE Good Faith Efforts Documentation, of its efforts made to meet the DBE contract goal as proposed by VDOT within the time frame specified in this provision. The means of transmittal and the risk for timely receipt of this information shall be the responsibility of the bidder. The bidder shall attach additional pages to the certification, if necessary, in order to fully detail specific good faith efforts made to obtain the DBE firms participation in the proposed contract work.

However, regardless of the DBE contract goal participation level proposed by the bidder or the extent of good faith efforts shown, all bidders shall timely and separately file their completed and executed forms C-111, C-112, C-48, and C-49, as aforementioned, or face potential bid rejection.

If a bidder does not submit its completed and executed forms C-111, or C-112, when required by this Special Provision, the bidder's bid will be considered non-responsive and may be rejected.

Where the Department upon initial review of the bid results determines the apparent low bidder has failed or appears to have failed to meet the requirements of the **Contract Goal, Good Faith Efforts Specified** section of this Special Provision and has failed to adequately document that it made a good faith effort to achieve sufficient DBE participation as specified in the bid proposal, that firm upon notification of the Department's initial determination will be offered the opportunity for administrative reconsideration before VDOT rejects that bid as non-responsive. The bidder shall address such request for reconsideration in writing to the Contract Engineer within five (5) business days of receipt of notification by the Department and shall be given the opportunity to discuss the issue and present its evidence in person to the Administrative Reconsideration Panel. The Administrative Reconsideration Panel will be made up of VDOT Division Administrators or their designees, none of who took part in the initial determination that the bidder failed to make the goal or make adequate good faith efforts to do so. After reconsideration, VDOT shall notify the bidder in writing of its decision and explain the basis for finding that the bidder did or did not meet the goal or make adequate good faith efforts to do so.

If, after reconsideration, the Department determines the bidder has failed to meet the requirements of the contract goal and has failed to make adequate good faith efforts to achieve the level of DBE participation as specified in the bid proposal, the bidder's bid will be rejected.

If sufficient documented evidence is presented to demonstrate that the apparent low bidder made reasonable good faith efforts, the Department will award the contract and reduce the DBE requirement to the actual commitment identified by the lowest successful bidder at the time of its bid. The Contractor is still encouraged to seek additional DBE participation during the life of the contract.

However, such action will not relieve the Contractor of its responsibility for complying with the reduced DBE requirement during the life of the contract or any administrative sanctions as may be appropriate.

During the Contract: If a DBE, through no fault of the Contractor, is unable or unwilling to fulfill his agreement with the Contractor, the Contractor shall immediately notify the Department and provide all relevant facts. If a Contractor relieves a DBE subcontractor of the responsibility to perform work under their subcontract, the Contractor is encouraged to take the appropriate steps to obtain a DBE to perform an equal dollar value of the remaining subcontracted work. In such instances, the Contractor is expected to seek DBE participation towards meeting the goal during the performance of the contract.

If the Contractor fails to conform to the schedule of DBE participation as shown on the progress schedule, or at any point at which it is clearly evident that the remaining dollar value of allowable credit for performing work is insufficient to obtain the scheduled participation, and the Contractor has not taken the preceding actions, the Contractor and any aforementioned affiliates may be subject to disallowance of DBE credit until such time as conformance with the schedule of DBE participation is achieved.

Project Completion: If the Contractor fails upon completion of the project to meet the required participation, the Contractor and any prime contractual affiliates, as in the case of a joint venture, may be enjoined from bidding as a prime Contractor, or participating as a subcontractor on VDOT projects for a period of 90 days.

Prior to enjoinment from bidding or denial to participate as a subcontractor for failure to comply with participation requirements, as provided hereinbefore, the Contractor may submit documentation to the State Construction Engineer to substantiate that failure was due solely to quantitative underrun(s), elimination of items subcontracted to DBEs, or to circumstances beyond their control, and that all feasible means have been used to obtain the required participation. The State Construction Engineer upon verification of such documentation shall make a determination whether or not the Contractor has met the requirements of the contract.

If it is determined that the aforementioned documentation is insufficient or the failure to meet required participation is due to other reasons, the Contractor may request an appearance before the Administrative Reconsideration Panel to establish that all feasible means were used to meet such participation requirements. The decision of the Administrative Reconsideration Panel shall be administratively final. If the decision is made to enjoin the Contractor from bidding on other VDOT work as described herein, the enjoinment period will begin upon the Contractor's failure to request a hearing within the designated time frame or upon the Administrative Reconsideration Panel's decision to enjoin, as applicable.

H. DBE Participation for Contract Goal Credit

DBE participation on the contract will count toward meeting the DBE contract goal in accordance with the following criteria:

1. Cost-plus subcontracts will not be considered to be in accordance with normal industry practice and will not normally be allowed for credit.

2. The applicable percentage of the total dollar value of the contract or subcontract awarded to the DBE will be counted toward meeting the contract goal for DBE participation in accordance with the **DBE Program-Related Certifications Made by Bidders\Contractors** section of this Special Provision for the value of the work, goods, or services that are actually performed or provided by the DBE firm itself or subcontracted by the DBE to other DBE firms.

3. When a DBE performs work as a participant in a joint venture with a non-DBE firm, the Contractor may count toward the DBE goal only that portion of the total dollar value of the contract equal to the distinctly defined portion of the contract work that the DBE has performed with the DBE's own forces or in accordance with the provisions of this Section. The Department shall be contacted in advance regarding any joint venture involving both a DBE firm and a non-DBE firm to coordinate Department review and approval of the joint venture's organizational structure and proposed operation where the Contractor seeks to claim the DBE's credit toward the DBE contract goal.

4. When a DBE subcontracts part of the work of the contract to another firm, the value of that subcontracted work may be counted toward the DBE contract goal only if the DBE's subcontractor at a lower tier is a certified DBE. Work that a DBE subcontracts to either a non-DBE firm or to a non-certified DBE firm will not count toward the DBE contract goal. The cost of supplies and equipment a DBE subcontractor purchases or leases from the prime Contractor or the prime's affiliated firms will not count toward the contract goal for DBE participation.

5. The Contractor may count expenditures to a DBE subcontractor toward the DBE contract goal only if the DBE performs a Commercially Useful Function (CUF) on that contract.

6. A Contractor may not count the participation of a DBE subcontractor toward the Contractor's final compliance with the DBE contract goal obligations until the amount being counted has actually been paid to the DBE. A Contractor may count sixty (60) percent of its expenditures actually paid for materials and supplies obtained from a DBE certified as a regular dealer, and one hundred (100) percent of such expenditures actually paid for materials and supplies obtained from a certified DBE manufacturer.

   (a) For the purposes of this Special Provision, a regular dealer is defined as a firm that owns, operates, or maintains a store, warehouse, or other establishment in which the materials, supplies, articles, or equipment required and used under the contract are bought, kept in stock, and regularly sold or leased to the public in the usual course of business. To be a regular dealer, the DBE firm shall be an established business that regularly engages, as its principal business and under its own name, in the purchase and sale or lease of the products or equipment in question. Packagers, brokers, manufacturers' representatives, or other persons who arrange or expedite transactions will not be considered regular dealers.

   (b) A DBE firm may be a regular dealer in such bulk items as petroleum products, steel, cement, gravel, stone, or asphalt without owning, operating, or maintaining a place of business where it keeps such items in stock if the DBE both owns and operates distribution equipment for the products it sells and provides for the contract work.

Any supplementation of a regular dealer's own distribution equipment shall be by a long-term lease agreement and not on an *ad hoc* or contract-by-contract basis to be eligible for credit to meet the DBE contract goal.

(c) If a DBE regular dealer is used for DBE contract goal credit, no additional credit will be given for hauling or delivery to the project site goods or materials sold by that DBE regular dealer. Those delivery costs shall be deemed included in the price charged for the goods or materials by the DBE regular dealer, who shall be responsible for their distribution.

(d) For the purposes of this Special Provision, a manufacturer will be defined as a firm that operates or maintains a factory or establishment that produces on the premises the materials, supplies, articles, or equipment required under the contract and of the general character described by the project specifications. A manufacturer shall include firms that produce finished goods or products from raw or unfinished material, or purchase and substantially alter goods and materials to make them suitable for construction use before reselling them.

(g) A Contractor may count toward the DBE contract goal the following expenditures to DBE firms that are not regular dealers or manufacturers for DBE program purposes:

1. The entire amount of fees or commissions charged by a DBE firm for providing a bona fide service, such as professional, technical, consultant or managerial services, or for providing bonds or insurance specifically required for the performance of the federal-aid contract, if the fee is reasonable and not excessive or greater than would normally be expected by industry standards for the same or similar services.

2. The entire amount of that portion of the construction contract that is performed by the DBE's own forces and equipment under the DBE's supervision. This includes the cost of supplies and materials ordered and paid for by the DBE for contract work, including supplies purchased or equipment leased by the DBE, except supplies and equipment a DBE subcontractor purchases or leases from the prime Contractor or its affiliates.

(h) A Contractor may count toward the DBE contract goal one hundred (100) percent of the fees paid to a DBE trucker or hauler for the delivery of material and supplies required on the project job site, but not for the cost of those materials or supplies themselves, provided that the trucking or hauling fee is determined by VDOT to be reasonable, as compared with fees customarily charged by non-DBE firms for similar services. A Contractor shall not count costs for the removal or relocation of excess material from or on the job site when the DBE trucking company is not the manufacturer of or a regular dealer in those materials and supplies. The DBE trucking firm shall also perform a Commercially Useful Function (CUF) on the project and not operate merely as a pass through for the purposes of gaining credit toward the DBE contract goal. Prior to submitting a bid, the Contractor shall determine, or contact the VDOT Civil Rights Division or its district Offices for assistance in determining, whether a DBE trucking firm will meet the criteria for performing a CUF on the project. See section on **Miscellaneous DBE Program Requirements; Factors used to Determine if a DBE Trucking Firm is Performing a CUF**.

(i) The Contractor will receive DBE contract goal credit for the fees or commissions charged by and paid to a DBE broker who arranges or expedites sales, leases, or other project work or service arrangements provided that those fees are determined by VDOT to be reasonable and not excessive as compared with fees customarily charged by non-DBE firms for similar services. For the purposes of this Special

Provision, a broker is defined as a person or firm that regularly engages in arranging for delivery of material, supplies, and equipment, or regularly arranges for the providing of project services as a course of routine business but does not own or operate the delivery equipment necessary to transport materials, supplies, or equipment to or from a job site.

I. Performing a Commercially Useful Function (CUF)

No credit toward the DBE contract goal will be allowed for contract payments or expenditures to a DBE firm if that DBE firm does not perform a CUF on that contract. A DBE performs a CUF when the DBE is solely responsible for execution of a distinct element of the contract work and the DBE actually performs, manages, and supervises the work involved with the firm's own forces or in accordance with the provisions of the **DBE Participation for Contract Goal Credit** section of this Special Provision. To perform a CUF the DBE alone shall be responsible and bear the risk for the material and supplies used on the contract, selecting a supplier or dealer from those available, negotiating price, determining quality and quantity, ordering the material and supplies, installing those materials with the DBE's own forces and equipment, and paying for those materials and supplies. The amount the DBE firm is to be paid under the contract shall be commensurate with the work the DBE actually performs and the DBE credit claimed for the DBE's performance.

Monitoring CUF Performance: It shall be the Contractor's responsibility to ensure that all DBE firms selected for subcontract work on the contract, for which he seeks to claim credit toward the contract goal, perform a CUF. Further, the Contractor is responsible for and shall ensure that each DBE firm fully performs the DBE's designated tasks with the DBE's own forces and equipment under the DBE's own direct supervision and management or in accordance with the provisions of the **DBE Participation for Contract Goal Credit** section of this Special Provision. For the purposes of this provision the DBE's equipment will mean either equipment directly owned by the DBE as evidenced by title, bill of sale or other such documentation, or leased by the DBE, and over which the DBE has control as evidenced by the leasing agreement from a firm not owned in whole or part by the prime Contractor or an affiliate of the Contractor under this contract.

VDOT will monitor the Contractor's DBE involvement during the performance of the contract. However, VDOT is under no obligation to warn the Contractor that a DBE's participation will not count toward the goal.

DBEs Must Perform a Useful and Necessary Role in Contract Completion: A DBE does not perform a commercially useful function if the DBE's role is limited to that of an extra participant in a transaction, contract, or project through which funds are passed in order to obtain the appearance of DBE participation.

DBEs Must Perform The Contract Work With Their Own Workforces: If a DBE does not perform and exercise responsibility for at least thirty (30) percent of the total cost of the DBE's contract with the DBE's own work force, or the DBE subcontracts a greater portion of the work of a contract than would be expected on the basis of normal industry practice for the type of work involve, VDOT will presume that the DBE is not performing a CUF and such participation will not be counted toward the contract goal.

VDOT Makes Final Determination On Whether a CUF Is Performed: VDOT has the final authority to determine whether a DBE firm has performed a CUF on a federal-aid contract. To determine whether a DBE is performing or has performed a CUF, VDOT will evaluate the amount of work subcontracted by that DBE firm or performed by other firms and the extent of the involvement of other firms' forces and equipment. Any DBE work performed by the Contractor or by employees or equipment of the Contractor shall be subject to disallowance

under the DBE Program, unless the independent validity and need for such an arrangement and work is demonstrated.

J. Verification of DBE Participation and Imposed Damages

Within fourteen days after contract execution, the Contractor shall submit to the Responsible Engineer, with a copy to the District Civil Rights Office (DCRO), a fully executed subcontract agreement for each DBE used to claim credit in accordance with the requirements stated on Form C-112. The subcontract agreement shall be executed by both parties stating the work to be performed, the details or specifics concerning such work, and the price which will be paid to the DBE subcontractor. Because of the commercial damage that the Contractor and its DBE subcontractor could suffer if their subcontract pricing, terms, and conditions were known to competitors, the Department staff will treat subcontract agreements as proprietary Contractor trade secrets with regard to Freedom of Information Act requests. In lieu of subcontract agreements, purchase orders may be submitted for haulers, suppliers, and manufacturers. These too, will be treated confidentially and protected. Such purchase orders must contain, as a minimum, the following information: authorized signatures of both parties; description of the scope of work to include contract item numbers, quantities, and prices; and required federal contract provisions.

The Contractor shall also furnish, and shall require each subcontractor to furnish, information relative to all DBE involvement on the project for each quarter during the life of the contract in which participation occurs and verification is available. The information shall be indicated on Form C-63, DBE and SWAM Payment Compliance Report. The department reserves the right to request proof of payment via copies of cancelled checks with appropriate identifying notations. Failure to provide Form C-63 to the District Civil Rights Office (DCRO) within five (5) business days after the reporting period may result in delay of approval of the Contractor's monthly progress estimate for payment. The names and certification numbers of DBE firms provided by the Contractor on the various forms indicated in this Special Provision shall be exactly as shown on the DMBE's or MWAA's latest list of certified DBEs. Signatures on all forms indicated herein shall be those of authorized representatives of the Contractor as shown on the Prequalification Application, Form C-32 or the Prequalification/Certification Renewal Application, Form C-32A, or authorized by letter from the Contractor. If DBE firms are used which have not been previously documented with the Contractor's bid and for which the Contractor now desires to claim credit toward the project goal, the Contractor shall be responsible for submitting necessary documentation in accordance with the procedures stipulated in this Special Provision to cover such work prior to the DBE beginning work.

Form C-63 can be obtained from the VDOT website at: *http://vdotforms.vdot.virginia.gov/*

The Contractor shall submit to the Responsible Engineer its progress schedule with a copy to the DCRO, as required by Section 108.03 of the Specifications or other such specific contract scheduling specification that may include contractual milestones, i.e., monthly or VDOT requested updates. The Contractor shall include a narrative of applicable DBE activities relative to work activities of the Contractor's progress schedule, including the approximate start times and durations of all DBE participation to be claimed for credit that shall result in full achievement of the DBE goal required in the contract.

On contracts awarded on the basis of good faith efforts, narratives or other agreeable format of schedule information requirements and subsequent progress determination shall be based on the commitment information shown on the latest Form C-111 as compared with the appropriate Form C-63.

Prior to beginning any major component or quarter of the work, as applicable, in which DBE work is to be performed, the Contractor shall furnish a revised Form C-111 showing the name(s) and certification number(s) of any current DBEs not previously submitted who will

perform the work during that major component or quarter for which the Contractor seeks to claim credit toward the contract DBE goal. The Contractor shall obtain the prior approval of the Department for any assistance it may provide to the DBE beyond its existing resources in executing its commitment to the work in accordance with the requirements listed in the **Good Faith Efforts Described** section of this Special Provision. If the Contractor is aware of any assistance beyond a DBE's existing resources that the Contractor, or another subcontractor, may be contemplating or may deem necessary and that have not been previously approved, the Contractor shall submit a new or revised narrative statement for VDOT's approval prior to assistance being rendered.

If the Contractor fails to comply with correctly completing and submitting any of the required documentation requested by this provision within the specified time frames, the Department will withhold payment of the monthly progress estimate until such time as the required submissions are received VDOT. Where such failures to provide required submittals or documentation are repeated the Department will move to enjoin the Contractor and any prime contractual affiliates, as in the case of a joint venture, from bidding as a prime Contractor, or participating as a subcontractor on VDOT projects until such submissions are received.

K. Documentation Required for Semi-final Payment

On those projects nearing completion, the Contractor must submit Form C-63 marked "Semi-Final" within twenty (20) days after the submission of the last regular monthly progress estimate to the DCRO. The form must include each DBE used on the contract work and the work performed by each DBE. The form shall include the actual dollar amount paid to each DBE for the accepted creditable work on the contract. The form shall be certified under penalty of perjury, or other applicable law, to be accurate and complete. VDOT will use this certification and other information available to determine applicable DBE credit allowed to date by VDOT and the extent to which the DBEs were fully paid for that work. The Contractor shall acknowledge by the act of filing the form that the information is supplied to obtain payment regarding a federal participation contract. A letter of certification, signed by both the prime Contractor and appropriate DBEs, will accompany the form, indicating the amount, including any retainage, if present, that remains to be paid to the DBE(s).

L. Documentation Required for Final Payment

On those projects that are complete, the Contractor shall submit a final Form C-63 marked "Final" to the DCRO, within thirty (30) days of the final estimate. The form must include each DBE used on the contract and the work performed by each DBE. The form shall include the actual dollar amount paid to each DBE for the creditable work on the contract. VDOT will use this form and other information available to determine if the Contractor and DBEs have satisfied the DBE contract goal percentage specified in the contract and the extent to which credit was allowed. The Contractor shall acknowledge by the act of signing and filing the form that the information is supplied to obtain payment regarding a federal participation contract.

M. Prompt Payment Requirements

The Contractor shall make prompt and full payment to the subcontractor(s) of any retainage held by the prime Contractor after the subcontractor's work is satisfactorily completed.

For purposes of this Special Provision, a subcontractor's work is satisfactorily completed when all the tasks called for in the subcontract have been accomplished, documented, and accepted as required by the contract documents by VDOT. When VDOT has made partial acceptance of a portion of the prime contract, the Department will consider the work of any subcontractor covered by that partial acceptance to be satisfactorily completed. Payment will

be made in accordance with the requirements of Section 107.01, Section 109.08, and Section 109.09 of the Specifications.

Upon VDOT's payment of the subcontractor's portion of the work as shown on the monthly progress estimate and the receipt of payment by the Contractor for such work, the Contractor shall make compensation in full to the subcontractor for that portion of the work satisfactorily completed and accepted by the Department. For the purposes of this Special Provision, payment of the subcontractor's portion of the work shall mean the Contractor has issued payment in full, less agreed upon retainage, if any, to the subcontractor for that portion of the subcontractor's work that VDOT paid to the Contractor on the monthly progress estimate.

The Contractor shall make payment of the subcontractor's portion of the work within seven (7) days of the receipt of payment from VDOT in accordance with the requirements of Section 107.01, Section 109.08, and Section 109.09 of the Specifications.

If the Contractor fails to make payment for the subcontractor's portion of the work within the time frame specified herein, the subcontractor shall contact the Responsible Engineer and the Contractor's bonding company in writing. The bonding company and VDOT will investigate the cause for non-payment and, barring mitigating circumstances that would make the subcontractor ineligible for payment, ensure payment in accordance with the requirements of Section 107.01, Section 109.08, and Section 109.09 of the Specifications.

By bidding on this contract, and by accepting and executing this contract, the Contractor agrees to assume these contractual obligations, and to bind the Contractor's subcontractors contractually to those prompt payment requirements.

Nothing contained herein shall preclude the Contractor from withholding payment to the subcontractor in accordance with the terms of the subcontract in order to protect the Contractor from loss or cost of damage due to a breach of agreement by the subcontractor.

N. Miscellaneous DBE Program Requirements

Loss of DBE Eligibility: When a DBE firm has been removed from eligibility as a certified DBE firm, the following actions will be taken:

1. When a Bidder/Contractor has made a commitment to use a DBE firm that is not currently certified, thereby making the Contractor ineligible to receive DBE participation credit for work performed, and a subcontract has not been executed, the ineligible DBE firm does not count toward either the contract goal or overall goal. The Contractor shall meet the contract goal with a DBE firm that is eligible to receive DBE credit for work performed, or must demonstrate to the Contract Engineer that it has made good faith efforts to do so.

2. When a Bidder/Contractor has executed a subcontract with a certified DBE firm prior to official notification of the DBE firm's loss of eligibility, the Contractor may continue to use the firm on the contract and shall continue to receive DBE credit toward its DBE goal for the subcontractor's work.

3. When VDOT has executed a prime contract with a DBE firm that is certified at the time of contract execution but that is later ruled ineligible, the portion of the ineligible firm's performance on the contract before VDOT has issued the notice of its ineligibility shall count toward the contract goal.

Termination of DBE: If a certified DBE subcontractor is terminated, or fails, refuses, or is unable to complete the work on the contract for any reason, the Contractor must promptly

request approval to substitute or replace that firm in accordance with this section of this Special Provision.

The Contractor, as aforementioned in **DBE Program-Related Certifications Made by Bidders/Contractors**, shall notify VDOT in writing before terminating and/or replacing the DBE that was committed as a condition of contract award or that is otherwise being used or represented to fulfill DBE contract obligations during the contract performance period. Written consent from the Department for terminating the performance of any DBE shall be granted only when the Contractor can demonstrate that the DBE is unable, unwilling, or ineligible to perform its obligations for which the Contractor sought credit toward the contract DBE goal. Such written consent by the Department to terminate any DBE shall concurrently constitute written consent to substitute or replace the terminated DBE with another DBE. Consent to terminate a DBE shall not be based on the Contractor's ability to negotiate a more advantageous contract with another subcontractor whether that subcontractor is, or is not, a certified DBE.

1. All Contractor requests to terminate, substitute, or replace a certified DBE shall be in writing, and shall include the following information:

   (a) The date the Contractor determined the DBE to be unwilling, unable, or ineligible to perform.

   (b) The projected date that the Contractor shall require a substitution or replacement DBE to commence work if consent is granted to the request.

   (c) A brief statement of facts describing and citing specific actions or inaction by the DBE giving rise to the Contractor's assertion that the DBE is unwilling, unable, or ineligible to perform;

   (d) A brief statement of the affected DBE's capacity and ability to perform the work as determined by the Contractor;

   (e) A brief statement of facts regarding actions taken by the Contractor which are believed to constitute good faith efforts toward enabling the DBE to perform;

   (f) The current percentage of work completed on each bid item by the DBE;

   (g) The total dollar amount currently paid per bid item for work performed by the DBE;

   (h) The total dollar amount per bid item remaining to be paid to the DBE for work completed, but for which the DBE has not received payment, and with which the Contractor has no dispute;

   (i) The total dollar amount per bid item remaining to be paid to the DBE for work completed, but for which the DBE has not received payment, and over which the Contractor and/or the DBE have a dispute.

2. Contractor's Written Notice to DBE of Pending Request to Terminate and Substitute with another DBE.

   The Contractor shall send a copy of the "request to terminate and substitute" letter to the affected committed DBE firm, in conjunction with submitting the request to the DCRO. The affected DBE firm may submit a response letter to the Department within two (2) business days of receiving the notice to terminate from the Contractor. The affected DBE firm shall explain its position concerning performance on the committed work. The

Department will consider both the Contractor's request and the DBE's response and explanation before approving the Contractor's termination and substitution request, or determining if any action should be taken against the Contractor.

If, after making its best efforts to deliver a copy of the "request to terminate and substitute" letter, the Contractor is unsuccessful in notifying the affected DBE firm, the Department will verify that the affected, committed DBE firm is unable or unwilling to continue the contract. The Department will immediately approve the Contractor's request for a substitution.

3. Proposed Substitution of Another Certified DBE

   Upon termination of a DBE, the Contractor shall use reasonable good faith efforts to replace the terminated DBE. The termination of such DBE shall not relieve the Contractor of its obligations pursuant to this section, and the unpaid portion of the terminated DBE's contract will not be counted toward the contract goal.

   When a DBE substitution is necessary, the Contractor shall submit an amended Form C-111 with the name of another DBE firm, the proposed work to be performed by that firm, and the dollar amount of the work to replace the unfulfilled portion of the work of the originally committed DBE firm. The Contractor shall furnish all pertinent information including the contract I.D. number, project number, bid item, item description, bid unit and bid quantity, unit price, and total price. In addition, the Contractor shall submit documentation for the requested substitute DBE as described in this section of this Special Provision.

   Should the Contractor be unable to commit the remaining required dollar value to the substitute DBE, the Contractor shall provide written evidence of good faith efforts made to obtain the substitute value requirement. The Department will review the quality, thoroughness, and intensity of those efforts. Efforts that are viewed by VDOT as merely superficial or pro-forma will not be considered good faith efforts to meet the contract goal for DBE participation. The Contractor must document the steps taken that demonstrated its good faith efforts to obtain participation as set forth in the **Good Faith Efforts Described** section of this Special Provision.

Factors Used to determine if a DBE Trucking Firm is performing a CUF:

The following factors will be used to determine whether a DBE trucking company is performing a CUF:

1. To perform a CUF the DBE trucking firm shall be completely responsible for the management and supervision of the entire trucking operation for which the DBE is responsible by subcontract on a particular contract. There shall not be a contrived arrangement, including, but not limited to, any arrangement that would not customarily and legally exist under regular construction project subcontracting practices for the purpose of meeting the DBE contract goal;

2. The DBE must own and operate at least one fully licensed, insured, and operational truck used in the performance of the contract work. This does not include a supervisor's pickup truck or a similar vehicle that is not suitable for and customarily used in hauling the necessary materials or supplies;

3. The DBE receives full contract goal credit for the total reasonable amount the DBE is paid for the transportation services provided on the contract using trucks the DBE owns, insures, and operates using drivers that the DBE employs and manages;

4. The DBE may lease trucks from another certified DBE firm, including from an owner-operator who is certified as a DBE. The DBE firm that leases trucks from another DBE will receive credit for the total fair market value actually paid for transportation services the lessee DBE firm provides on the contract;

5. The DBE may also lease trucks from a non-DBE firm, including an owner-operator. The DBE who leases trucks from a non-DBE is entitled to credit for the total value of the transportation services provided by non-DBE lessees, *not to exceed the value of transportation services provided by DBE-owned trucks on the contract.* For additional participation by non-DBE lessees, the DBE will only receive credit for the fee or commission it receives as a result of the lease arrangement.

EXAMPLE

DBE Firm X uses two (2) of its own trucks on a contract. The firm leases two (2) trucks from DBE Firm Y and six (6) trucks from non-DBE Firm Z.

		Value of Trans. Serv. (For Illustrative Purposes Only**)**
Firm X		
Truck 1	Owned by DBE	$100 per day
Truck 2	Owned by DBE	$100 per day
Firm Y		
Truck 1	Leased from DBE	$110 per day
Truck 2	Leased from DBE	$110 per day
Firm Z		
Truck 1	Leased from Non DBE	$125 per day
Truck 2	Leased from Non DBE	$125 per day
Truck 3	Leased from Non DBE	$125 per day
Truck 4	Leased from Non DBE	$125 per day
Truck 5	Leased from Non DBE*	$125 per day
Truck 6	Leased from Non DBE*	$125 per day

DBE credit would be awarded for the total transportation services provided by DBE Firm X and DBE Firm Y, and may also be awarded for the total value of transportation services by four (4) of the six (6) trucks provided by non-DBE Firm Z (not to exceed the value of transportation services provided by DBE-owned trucks).

Credit = 8 Trucks
Total Value of Transportation Services = $820

In all, full DBE credit would be allowed for the participation of eight (8) trucks (twice the number of DBE trucks owned and leased) and the dollar value attributable to the Value of Transportation Services provided by the 8 trucks.

* With respect to the other two trucks provided by non-DBE Firm Z, DBE credit could be awarded only for the fees or commissions pertaining to those trucks that DBE Firm X receives as a result of the lease with non-DBE Firm Z.

6. For purposes of this section, the lease must indicate that the DBE firm leasing the truck has exclusive use of and control over the truck. This will not preclude the leased truck from working for others during the term of the lease with the consent of the DBE, provided the lease gives the DBE absolute priority for and control over the use of the leased truck. Leased trucks must display the name and identification number of the DBE firm that has leased the truck at all times during the life of the lease.

Data Collection: In accordance with 49CFR Section 26.11, all firms bidding on prime contracts and bidding or quoting subcontracts on federal-aid projects shall provide the following information to the Contract Engineer annually.

- Firm name
- Firm address
- Firm's status as a DBE or non-DBE
- The age of the firm and
- The annual gross receipts of the firm

The means of transmittal and the risk for timely receipt of this information shall be the responsibility of the bidder. However, the above information can be submitted by means of the Annual Gross Receipts Survey as required in the Prequalification/Certification application.

All bidders, including DBE prime Contractor bidders, shall complete and submit to the Contract Engineer the Subcontractor/Supplier Solicitation and Utilization Form C-48 for each bid submitted; to be received within ten (10) business days after the bid opening. Failure of bidders to submit this form in the time frame specified may be cause for disqualification of the bidder and rejection of their bid in accordance with the requirements of this Special Provision, the contract specifications, and VDOT Road and Bridge specifications.

O. Suspect Evidence of Criminal Behavior

Failure of a bidder, Contractor, or subcontractor to comply with the Virginia Department of Transportation Road and Bridge Specifications and these Special Provisions wherein there appears to be evidence of criminal conduct shall be referred to the Attorney General for the Commonwealth of Virginia and/or the FHWA Inspector General for criminal investigation and, if warranted, prosecution.

Suspected DBE Fraud

In appropriate cases, VDOT will bring to the attention of the U. S. Department of Transportation (USDOT) any appearance of false, fraudulent, or dishonest conduct in connection with the DBE program, so that USDOT can take the steps, e.g., referral to the Department of Justice for criminal prosecution, referral to the USDOT Inspector General, action under suspension and debarment or Program Fraud and Civil Penalties rules provided in 49CFR Part 31.

P. Summary of Remedies for Non-Compliance with DBE Program Requirements

Failure of any bidder\Contractor to comply with the requirements of this Special Provision for Section 107.15 of the Virginia Road and Bridge Specifications, which is deemed to be a condition of bidding, or where a contract exists, is deemed to constitute a breach of contract shall be remedied in accordance with the following:

1. **Disadvantaged Business Enterprise (DBE) Program Requirements**

The Contractor shall carry out applicable requirements of 49 CFR Part 26 in the award, administration, and performance of this contract. Failure by the Contractor to carry out these requirements is a material breach of this contract, which will result in the termination of this contract or other such remedy, as VDOT deems appropriate.

All administrative remedies noted in this provision are automatic unless the Contractor exercises the right of appeal within the required timeframe(s) specified herein.

2. **DBE Program-Related Certifications Made by Bidders\Contractors**

Once awarded the contract, the Contractor shall comply fully with all regulatory and contractual requirements of the USDOT DBE Program, and that each certified DBE firm participating in the contract shall fully perform the designated work items with the DBE's own forces and equipment under the DBE's direct supervision, control, and management. Where a contract exists and where the Contractor, DBE firm, or any other firm retained by the Contractor has failed to comply with federal or VDOT DBE Program regulations and/or their requirements on that contract, VDOT has the authority and discretion to determine the extent to which the DBE contract requirements have not been met, and will assess against the Contractor any remedies available at law or provided in the contract in the event of such a contract breach.

3. **Disqualification of Bidder**

Bidders may be disqualified from bidding for failure to comply with the requirements of this Special Provision, the contract specifications, and VDOT Road and Bridge Specifications.

4. **Bidding Procedures**

The failure of a bidder to submit the required documentation within the timeframes specified in the **Contract Goal, Good Faith Efforts Specified** section of this Special Provision may be cause for rejection of that bidder's bid. If the lowest bidder is rejected for failure to submit required documentation in the specified time frames, the Department may either award the work to the next lowest bidder, or re-advertise and construct the work under contract or otherwise as determined by the Commonwealth.

In order to award a contract to a bidder that has failed to meet DBE contract goal requirements, VDOT will determine if the bidder's efforts were adequate good faith efforts, and if given all relevant circumstances, those efforts were to the extent a bidder actively and aggressively seeking to meet the requirements would make. Regardless of the DBE contract goal participation level proposed by the bidder or the extent of good faith efforts shown, all bidders shall timely and separately file their completed and executed Forms C-111, C-112, C-48, and Form C-49, as aforementioned, or face potential bid rejection. If a bidder does not submit it's completed and executed C-111, or C-112, when required by this Special Provision, the bidder's bid will be considered non-responsive and may be rejected. If, after reconsideration, the Department determines the bidder has failed to meet the requirements of the contract goal and has failed to make adequate good faith efforts to achieve the level of DBE participation as specified in the bid proposal, the bidder's bid will be rejected. If sufficient documented evidence is presented to demonstrate that the apparent low bidder made reasonable good faith efforts, the Department will award the contract and reduce the DBE requirement to the

actual commitment identified by the lowest successful bidder at the time of its bid. The Contractor is encouraged to seek additional participation during the life of the contract.

If the Contractor fails to conform to the schedule of DBE participation as shown on the progress schedule, or at any point at which it is clearly evident that the remaining dollar value of allowable credit for performing work is insufficient to obtain the scheduled participation, the Contractor and any aforementioned affiliates may be enjoined from bidding for 60 days or until such time as conformance with the schedule of DBE participation is achieved. In such instances, the Contractor is expected to seek DBE participation towards meeting the goal during the prosecution of the contract.

If the Contractor fails upon completion of the project to meet the required participation, the Contractor and any prime contractual affiliates, as in the case of a joint venture, may be enjoined from bidding as a prime Contractor, or participating as a subcontractor on VDOT projects for a period of 90 days.

Prior to enjoinment from bidding or denial to participate as a subcontractor for failure to comply with participation requirements, as provided hereinbefore, the Contractor may submit documentation to the State Construction Engineer to substantiate that failure was due solely to quantitative underrun(s) or elimination of items subcontracted to DBEs, and that all feasible means have been used to obtain the required participation. The State Construction Engineer upon verification of such documentation shall make a determination whether or not the Contractor has met the requirements of the contract.

If it is determined that the aforementioned documentation is insufficient or the failure to meet required participation is due to other reasons, the Contractor may request an appearance before the Administrative Reconsideration Panel to establish that all feasible means were used to meet such participation requirements. The decision of the Administrative Reconsideration Panel shall be administratively final. The enjoinment period will begin upon the Contractor's failure to request a hearing within the designated time frame or upon the Administrative Reconsideration Panel's decision to enjoin, as applicable.

5. Verification of DBE Participation and Imposed Damages

If the Contractor fails to comply with correctly completing and submitting any of the required documentation requested by this provision within the specified time frames, the Department will withhold payment of the monthly progress estimate until such time as the required submissions are received by VDOT. Where such failures to provide required submittals or documentation are repeated the Department will move to enjoin the Contractor and any prime contractual affiliates, as in the case of a joint venture, from bidding as a prime Contractor, or participating as a subcontractor on VDOT projects until such submissions are received.

In addition to the remedies described heretofore in this provision VDOT also exercises its rights with respect to the following remedies:

Suspect Evidence of Criminal Behavior

Failure of a bidder, Contractor, or subcontractor to comply with the Virginia Department of Transportation Road and Bridge Specifications and these Special Provisions wherein there appears to be evidence of criminal conduct shall be referred to the Attorney General for the Commonwealth of Virginia and/or the FHWA Inspector General for criminal investigation and, if warranted prosecution.

In appropriate cases, VDOT will bring to the attention of the U. S. Department of Transportation (USDOT) any appearance of false, fraudulent, or dishonest conduct in connection with the DBE program, so that USDOT can take the steps, e.g., referral to the Department of Justice for criminal prosecution, referral to the USDOT Inspector General, action under suspension and debarment or Program Fraud and Civil Penalties rules provided in 49CFR Part 31.

VIRGINIA DEPARTMENT OF TRANSPORTATION
SPECIAL PROVISION FOR

NOTICE OF REQUIREMENT FOR AFFIRMATIVE ACTION TO ENSURE EQUAL EMPLOYMENT OPPORTUNITY (EXECUTIVE ORDER 11246)

1. The Offeror's or Bidder's attention is called to the "Equal Opportunity Clause" and the "Standard Federal Equal Employment Opportunity Construction Contract Specifications" set forth herein.

2. The goals for female and minority participation, expressed in percentage terms of the Contractor's aggregate work force in each trade on all construction works in the covered area, are as follows:

   Females- 6.9%
   Minorities - See Attachment "A"

   The goals are applicable to all the Contractor's construction work performed in the covered area, whether or not it is Federal or federally assisted. If the Contractor performs construction work in a geographical area located outside of the covered area, it shall apply the goals established for such geographical area where the work is actually performed. With regard to this second area, the Contractor also is subject to the goals for both its federally involved and non-federally involved construction.

   The Contractor's compliance with the Executive Order and the regulations in 41 CFR Part 60-4 shall be based on its implementation of the Equal Opportunity Clause, specific affirmative action obligations required by the specifications, set forth in 41 CFR 60-4.3(a), and its efforts to meet the goals established herein. The hours of minority and female employment and training must be substantially uniform throughout the length of the contract, and in each trade, and the Contractor shall make a good faith effort to employ minorities and women evenly on each of its projects. The transfer of minority or female employees or trainees from Contractor to Contractor or from project to project for the sole purpose of meeting the Contractor's goals shall be a violation of the contract, the Executives Order and the regulations in 41 CFR Part 60-4. Compliance with the goals will be measured against the total work hours performed.

3. The Contractor shall provide written notification to the Director of the Office of Federal Contract Compliance Programs <u>within 10 workings days</u> the award of any construction subcontract in excess of $10,000 at any tier for construction works under this contract. The notification shall list the name, address and telephone number of the subcontractor, employer identification number, estimated dollar amount of the subcontract, estimated starting and completion dates of the subcontract and the geographical area in which the contract is to be performed.

STANDARD FEDERAL EQUAL EMPLOYMENT OPPORTUNITY CONSTRUCTION CONTRACT SPECIFICATIONS (EXECUTIVE ORDER 11246)

1. As, used in this provision:

   a. "Covered area" means the geographical area described in the solicitation from which this contract resulted;

   b. "Director" means Director, Office of Federal Contract Compliance Programs, United States Department of Labor, or any person to whom the Director delegates authority;

   c. "Employer identification number" means the Federal Social Security number used on the Employer's Quarterly Federal Tax Return, U. S. Treasury Department Form 941;

   d. "Minority" includes:

(i) Black (all persons having origins in any of the Black African racial groups not of Hispanic origin);

(ii) Hispanic (all persons of Mexican, Puerto Rican, Cuban, Central or South American or other Spanish Culture or origin, regardless of race);

(iii) Asian and Pacific Islander (all persons having origins in any of the original peoples of the Far East, Southeast Asia, the Indian Subcontinent, or the Pacific Islands); and

(iv) American Indian or Alaskan Native (all persons having origins in any of the original peoples of North America and maintaining identifiable tribal affiliations through membership and participation or community identification).

2. Whenever the Contractor, or any Subcontractor at any tier, subcontracts a portion of the work involving any construction trade, it shall physically include in each subcontract in excess of $10,000 the provisions of these specifications and the Notice which contains the applicable goals for minority and female participation.

3. If the Contractor is participating (pursuant to 41 CFR 60-4.5) in a Hometown Plan approved by the U. S. Department of Labor in the covered area either individually or through an association, its affirmative action obligations on all work in the Plan area (including goals and timetables) shall be in accordance with that Plan for those trades which have unions participating in the Plan. Contractors must be able to demonstrate their participation in and compliance with the provisions of any such Hometown Plan. Each Contractor or Subcontractor participating in an approved Plan is individually required to comply with its obligations under the EEO clause, and to make a good faith effort to achieve each goal under the Plan in each trade in which it has employees. The overall good faith performance by other Contractors and Subcontractors toward a goal in an approved Plan does not excuse any covered Contractor's or Subcontractor's failure to take good faith efforts to achieve the Plan goals and timetables.

4. The Contractor shall implement the specific affirmative action standards provided in paragraphs 7 a through p of these specifications. The goals set forth m the solicitation from which this contract resulted are expressed as percentages of the total hours of employment and training of minority and female utilization the Contractor should reasonably be able to achieve in each construction trade in which it has employees in the coverer area. Covered construction Contractors performing construction work in geographical areas where they do not have a Federal or federally assisted construction contract shall apply the minority and female goals established for the geographical area where the work is being performed. Goals are published periodically in the Federal Register in notice form, and such notices may be obtained from any Office of Federal Contract Compliance Programs office or from Federal procurement contracting officers. The Contractor is expected to make substantially uniform progress in meeting its goals in each craft during the period specified.

5. Neither the provisions of any collective bargaining agreement, nor the failure by a union with whom the Contractor has a collective bargaining agreement, to refer either minorities or women shall excuse the Contractor's obligations under these specifications, Executive Order 11246, or the regulations promulgated pursuant thereto.

6. In order for the nonworking training hours of apprentices and trainees to be counted in meeting the goals, such apprentices and trainees must be employed by the Contractor during the training period, and the Contractor must have made a commitment to employ the apprentices and trainees at the completion of their training, subject to the availability of employment opportunities. Trainees must be trained pursuant to training programs approved by the U. S. Department of Labor.

7. The Contractor shall take specific affirmative actions to ensure equal employment opportunity. The evaluation of the Contractor's compliance with these specifications shall be based upon its effort to achieve maximum results from its actions. The Contractor shall document these efforts fully, and shall implement affirmative action steps at least as extensive as the following:

a. Ensure and maintain a working environment free of harassment, intimidation, and coercion at all sites, and in all facilities at which the Contractor's employees are assigned to work. The Contractor, where possible, shall assign two or more women to each construction project. The Contractor shall specifically ensure that all foreman, superintendents and other on-site supervisory personnel are aware of and carry out the Contractor's obligation to maintain such a working environment, with specific attention to minority or female individuals working at such sites in such facilities.

b. Establish and maintain a current list of minority and female recruitment sources, provide written notification to minority and female recruitment sources and to community organizations when the Contractor or its unions have employment opportunities available, and maintain a record of the organizations' responses.

c. Maintain a current file of the names, addresses and telephone numbers of each minority and female off the street applicant and minority or female referral from a union, a recruitment source or community organization and of what action was taken with respect to each such individual. If such individual was sent to the union hiring hall for referral and was not referred back to the Contractor by the union, or if referred, not employed by the Contractor, this shall be documented in the file with the reason therefore, along with whatever additional actions the Contractor may have taken.

d. Provide immediate written notification to the Director when the union or unions which the Contractor has a collective bargaining agreement has not referred to the Contractor a minority person or women sent by the Contractor, or when the Contractor has other information that the union referral process has impeded the Contractor's efforts to meet its obligations.

e. Develop on-the-job training opportunities and/or participate in training programs for the area which expressly include minorities and women, including upgrading programs and apprenticeship and trainee programs relevant to the Contractor's employment needs, especially those programs funded or approved by the Department of Labor. The Contractor shall provide notice of these programs to the sources complied under 7b above.

f. Disseminate the Contractor's EEO policy by providing notice of the policy to unions and training programs and requesting their cooperation in assisting the Contractor in meeting its EEO obligations; by including it in any policy manual and collective bargaining agreement; by publicizing it in the company newspaper or annual report; by specific review of the policy with all management personnel and with all minority and female employees at least once a year; and by posting the company EEO policy on bulletin boards accessible to all employees at each location where construction work is performed.

g. Review, at least annually, the company's EEO policy and affirmative action obligations under these specifications with all employees having any responsibility for hiring, assignment, layoff, termination, or other employment decisions including specific review of these items with onsite supervisory personnel such as Superintendents and General Foremen prior to the initiation of construction work at any job site. A written record shall be made and maintained identifying the time and place of these meetings, persons attending, subject matter discussed and disposition of the subject matter.

h. Disseminate the Contractor's EEO policy externally by including in any news media advertisement that the Contractor is "An Equal Opportunity Employer" for minority and female, and providing written notification to and discussing the Contractor's EEO policy with other Contractors and Subcontractors with whom the Contractor does or anticipates doing business.

i. Directs its recruitment efforts, both oral and written, to minority, female and community organizations, to schools with minority and female students and to minority and recruitment and training organizations serving the Contractor's recruitment area and employment needs. Not later than one month prior to the date for the acceptance of applications for apprenticeship or other training by

recruitment source, the Contractor shall send written notification to organizations such as the above, describing the openings, screening procedures and tests to be used m the selection process.

j. Encourage present minority and female employees to recruit other minority persons and women and, where reasonable, provide after school, summer and vacation employment to minority and female youth both on the site and in other areas of Contractor's workforce.

k. Validate all tests and other selection requirements where there is an obligation to do so under 41 CFR Part 60-3.

l. Conduct, at least annually, an inventory and evaluation of all minority and female personnel for promotional opportunities and encourage these employees to seek or to prepare for such opportunities through appropriate training or other means.

m. Ensure that seniority practices, job classifications, work assignments and other personnel practices, do not have a discriminatory effect by continually monitoring all personnel and employment related activities to ensure that the EEO policy and the Contractor's obligations under these specifications are being carried out.

n. Ensure that all facilities and company activities are nonsegregated, except that separate or single-user toilet and necessary changing facilities shall be provided to assure privacy between the sexes.

o. Document and maintain a record of all solicitations of offers for subcontracts from minority and female construction contractors and suppliers, including circulation of solicitations to minority and female contractor associations and other business associations.

p. Conduct a review, at least annually, of all supervisors' adherence to and performance under the Contractor's EEO policies and affirmative action obligations.

8. Contractors are encouraged to participate in voluntary associations which assist in fulfilling one or more of their affirmative action obligations (7a through p). The efforts of a contractor association, joint contractor-union, contractor-community, or other similar group of which the contractor is a member and participant, may be asserted as fulfilling any one or more of its obligations under 7a through p of these Specifications provided that the contractor actively participates in the group, makes every effort to assure that the group has a positive impact on the employment of minorities and women in the industry, ensures that the concrete benefits of the program are reflected in the Contractor's minority and female workforce participation, makes a good faith effort to meet its individual goals and timetables and can provide access to documentation which demonstrates the effectiveness of actions taken on behalf of the Contractor. The obligation to comply, however, is the Contractor's and failure of such a group to fulfill an obligation shall not be a defense for the Contractor's noncompliance.

9. Goals for women have been established. However, the Contractor IS required to provide equal employment opportunity and to take affirmative action for all minority groups, both male and female and all women, both minority and non-minority. Consequently, the Contractor may be in violation of the Executive Order if a particular group is employed in a substantially disparate manner, that is even thought the Contractor has achieved its goals for women, the Contractor may be in violation of the Executive Order if a specific minority group of women is underutilized.

10. The Contractor shall not use the goals and timetables or affirmative action standards to discriminate against any person because of race, color, religion, sex or nation origin.

11. The Contractor shall not enter into any Subcontract with any person or firm debarred from Government contracts pursuant to Executive Order 11246.

12. The Contractor shall carry out such sanctions and penalties for violation of these specifications and the Equal Opportunity Clause, including suspension, termination and cancellation of existing subcontracts as may be imposed or ordered pursuant to Executive Order 11246, as amended, and its implementing regulations by the Office of Federal Contract Compliance Programs. Any Contractor who fails to carry out such sanctions and penalties shall be in violation of these specifications and Executive Order 11246. as amended.

13. The Contractor, in fulfilling its obligations under these specifications shall implement specific affirmative action steps, at least as extensive as those standards prescribed in paragraph 7 of these specifications, so as to achieve maximum results from Its efforts to ensure equal employment opportunity. If the Contractor fails to comply with the requirements of the Executive Order, the implementing regulations, or these specifications, the Director will proceed in accordance with 41 CFR 60-4.8.

14. The Contractor shall designate and make known to the Department a responsible official as the EEO Officer to monitor all employment related activity, to ensure that the company EEO policy is being carried out, to submit reports relating to the provisions hereof as may be required by the Government and to keep records. Records shall at least include for each employee the name, address, telephone numbers, construction trade, union affiliation if any, employee identification number when assigned, social security number, race, sex, status (e.g., mechanic, apprentice, trainee, helper, or laborer), dates of changes in status, hours worked per week in the indicated trade, rate of pay, and locations at which the work was performed. Records shall be maintained in an easily understandable and retrievable form; however, to the degree that existing records satisfy this requirement, Contractors will not be required to maintain separate records.

15. Nothing herein provided shall be construed as a limitation upon the application of other laws which establish different standards of compliance or upon the application of requirements for the hiring of local or other area residents (e.g., those under the Public Works Employment Act of 1977 and the Community Development Block Grant Program).

ATTACHMENT A

Economic Area	Goal (Percent)
Virginia:	
021 Roanoke-Lynchburg, VA	
SMSA Counties:	
4640 Lynchburg, VA	19.3
VA Amherst; VA Appomattox; VA Campbell; VA Lynchburg	
6800 Roanoke, VA	10.2
VA Botetourt; VA Craig; VA Roanoke; VA Roanoke City; VA Salem	
Non-SMSA Counties	12.0
VA Alleghany; VA Augusta; VA Bath; VA Bedford; VA Bland; VA Carroll; VA Floyd; VA Franklin; VA Giles; VA Grayson; VA Henry; VA Highland; VA Montgomery; VA Nelson; VA Patrick; VA Pittsylvania; VA Pulaski; VA Rockbridge; VA Rockingham; VA Wythe; VA Bedford City; VA Buena Vista: VA Clifton Forge; VA Covington; VA Danville; VA Galax; VA Harrisonburg; VA Lexington; VA Martinsville; VA Radford; VA Staunton; VA Waynesboro; WV Pendleton.	
022 Richmond, VA	
SMSA Counties:	
6140 Petersburg - Colonial Heights - Hopewell, VA	30.6
VA Dinwiddie; VA Prince George; VA Colonial Heights; VA Hopewell; VA Petersburg.	
6760 Richmond, VA	24.9

VA Charles City; VA Chesterfield; VA Goochland, VA Hanover; VA Henrico; VA New Kent; VA Powhatan; VA Richmond.

Non-SMSA Counties 27.9

VA Albemarle; VA Amelia; VA Brunswick; VA Buckingham, VA Caroline; VA Charlotte; VA Cumberland; VA Essex; VA Fluvanna; VA Greene; VA Greensville; VA Halifax; VA King and Queen; VA King William; VA Lancaster; VA Louisa; VA Lunenburg; VA Madison; VA Mecklenburg; VA Northumberland; VA Nottoway; VA Orange; VA Prince Edward; VA Richmond VA Sussex; VA Charlottesville; VA Emporia; VA South Boston

023 Norfolk - Virginia Beach - Newport News VA:

SMSA Counties:

5680 Newport News- Hampton, VA 27.1

VA Gloucester; VA James City; VA York; VA Hampton; VA Newport News; VA Williamsburg.

5720 Norfolk - Virginia Beach - Portsmouth, VA - NC 26.6

NC Currituck; VA Chesapeake; VA Norfolk; VA Portsmouth; VA Suffolk; VA Virginia Beach.

Non-SMSA Counties 29.7

NC Bertie; NC Camden; NC Chowan; NC Gates; NC Hertford; NC Pasquotank; NC Perquimans; VA lsle of Wight; VA Matthews; VA Middlesex; VA Southampton; VA Surry; VA Franklin.

Washington, DC:

020 Washington, DC.

SMSA Counties:

8840 Washington, DC - MD - VA 28.0

DC District of Columbia; MD Charles; MD Montgomery MD Prince Georges; VA Arlington; VA Fairfax; VA Loudoun; VA Prince William VA Alexandria; VA Fairfax City; VA Falls Church.

Non- SMSA Counties 25.2

MD Calvert; MD Frederick; MD St. Marys: MD Washington; VA Clarke; VA Culpeper; VA Fauquier; VA Frederick; VA King George; VA Page; VA Rappahannock; VA Shenandoah; VA Spotsylvania; VA Stafford; VA Warren: VA Westmoreland; VA Fredericksburg; VA Winchester WV Berkeley; WV Grant; WV Hampshire; WV Hardy; WV Jefferson; WV Morgan.

Tennessee:

052 Johnson City - Kingsport - Bristol, TN - VA

SMSA Counties:

3630 Johnson City - Kingsport -Bristol, TN-VA 2.6

TN Carter; TN Hawkins; TN Sullivan; TN Washington; VA Scott: VA Washington; VA Bristol.

Non-SMSA Counties 3.2

TN Greene; TN Johnson; VA Buchanan; VA Dickenson; VA Lee; VA Russell; VA Smyth; VA Tazewell; VA Wise; VA Norton; WV McDowell; WV Mercer.

Maryland:

019 Baltimore MD

Non-SMSA Counties 23.6

MD Caroline; MD Dorchester; MD Kent; MD Queen Annes; MD Somerset; MD Talbot; MD Wicomico; MD Worchester; VA Accomack; VA Northampton.

May 1, 2012
FHWA-1273 (Electronic Version)

The following Form **FHWA-1273** titled **REQUIRED CONTRACT PROVISIONS, FEDERAL-AID CONSTRUCTION CONTRACTS** shall apply to this contract:

FHWA-1273 – Revised May 1, 2012

REQUIRED CONTRACT PROVISIONS
FEDERAL-AID CONSTRUCTION CONTRACTS

I. General
II. Nondiscrimination
III. Nonsegregated Facilities
IV. Davis-Bacon and Related Act Provisions
V. Contract Work Hours and Safety Standards Act Provisions
VI. Subletting or Assigning the Contract
VII. Safety: Accident Prevention
VIII. False Statements Concerning Highway Projects
IX. Implementation of Clean Air Act and Federal Water Pollution Control Act
X. Compliance with Governmentwide Suspension and Debarment Requirements
XI. Certification Regarding Use of Contract Funds for Lobbying

ATTACHMENTS

A. Employment and Materials Preference for Appalachian Development Highway System or Appalachian Local Access Road Contracts (included in Appalachian contracts only)

I. GENERAL

1. Form FHWA-1273 must be physically incorporated in each construction contract funded under Title 23 (excluding emergency contracts solely intended for debris removal). The contractor (or subcontractor) must insert this form in each subcontract and further require its inclusion in all lower tier subcontracts (excluding purchase orders, rental agreements and other agreements for supplies or services).

   The applicable requirements of Form FHWA-1273 are incorporated by reference for work done under any purchase order, rental agreement or agreement for other services. The prime contractor shall be responsible for compliance by any subcontractor, lower-tier subcontractor or service provider.

   Form FHWA-1273 must be included in all Federal-aid design-build contracts, in all subcontracts and in lower tier subcontracts (excluding subcontracts for design services, purchase orders, rental agreements and other agreements for supplies or services). The design-builder shall be responsible for compliance by any subcontractor, lower-tier subcontractor or service provider.

Contracting agencies may reference Form FHWA-1273 in bid proposal or request for proposal documents, however, the Form FHWA-1273 must be physically incorporated (not referenced) in all contracts, subcontracts and lower-tier subcontracts (excluding purchase orders, rental agreements and other agreements for supplies or services related to a construction contract).

2. Subject to the applicability criteria noted in the following sections, these contract provisions shall apply to all work performed on the contract by the contractor's own organization and with the assistance of workers under the contractor's immediate superintendence and to all work performed on the contract by piecework, station work, or by subcontract.

3. A breach of any of the stipulations contained in these Required Contract Provisions may be sufficient grounds for withholding of progress payments, withholding of final payment, termination of the contract, suspension / debarment or any other action determined to be appropriate by the contracting agency and FHWA.

4. Selection of Labor: During the performance of this contract, the contractor shall not use convict labor for any purpose within the limits of a construction project on a Federal-aid highway unless it is labor performed by convicts who are on parole, supervised release, or probation. The term Federal-aid highway does not include roadways functionally classified as local roads or rural minor collectors.

II. NONDISCRIMINATION

The provisions of this section related to 23 CFR Part 230 are applicable to all Federal-aid construction contracts and to all related construction subcontracts of $10,000 or more. The provisions of 23 CFR Part 230 are not applicable to material supply, engineering, or architectural service contracts.

In addition, the contractor and all subcontractors must comply with the following policies: Executive Order 11246, 41 CFR 60, 29 CFR 1625-1627, Title 23 USC Section 140, the Rehabilitation Act of 1973, as amended (29 USC 794), Title VI of the Civil Rights Act of 1964, as amended, and related regulations including 49 CFR Parts 21, 26 and 27; and 23 CFR Parts 200, 230, and 633.

The contractor and all subcontractors must comply with: the requirements of the Equal Opportunity Clause in 41 CFR 60-1.4(b) and, for all construction contracts exceeding $10,000, the Standard Federal Equal Employment Opportunity Construction Contract Specifications in 41 CFR 60-4.3.

Note: The U.S. Department of Labor has exclusive authority to determine compliance with Executive Order 11246 and the policies of the Secretary of Labor including 41 CFR 60, and 29 CFR 1625-1627. The contracting agency and the FHWA have the authority and the responsibility to ensure compliance with Title 23 USC Section 140, the Rehabilitation Act of 1973, as amended (29 USC 794), and Title VI of the Civil Rights Act of 1964, as amended, and related regulations including 49 CFR Parts 21, 26 and 27; and 23 CFR Parts 200, 230, and 633.

The following provision is adopted from 23 CFR 230, Appendix A, with appropriate revisions to conform to the U.S. Department of Labor (US DOL) and FHWA requirements.

1. **Equal Employment Opportunity:** Equal employment opportunity (EEO) requirements not to discriminate and to take affirmative action to assure equal opportunity as set forth under laws, executive orders, rules, regulations (28 CFR 35, 29 CFR 1630, 29 CFR 1625-1627, 41 CFR 60 and 49 CFR 27) and orders of the Secretary of Labor as modified by the provisions prescribed herein, and imposed pursuant to 23 U.S.C. 140 shall constitute the EEO and specific affirmative action standards for the contractor's project activities under this contract. The provisions of the Americans with Disabilities Act of 1990 (42 U.S.C. 12101 et seq.) set forth under 28 CFR 35 and 29 CFR 1630 are incorporated by reference in this contract. In the execution of this contract, the contractor agrees to comply with the following minimum specific requirement activities of EEO:

a. The contractor will work with the contracting agency and the Federal Government to ensure that it has made every good faith effort to provide equal opportunity with respect to all of its terms and conditions of employment and in their review of activities under the contract.

b. The contractor will accept as its operating policy the following statement:

> "It is the policy of this Company to assure that applicants are employed, and that employees are treated during employment, without regard to their race, religion, sex, color, national origin, age or disability. Such action shall include: employment, upgrading, demotion, or transfer; recruitment or recruitment advertising; layoff or termination; rates of pay or other forms of compensation; and selection for training, including apprenticeship, pre-apprenticeship, and/or on-the-job training."

2. **EEO Officer:** The contractor will designate and make known to the contracting officers an EEO Officer who will have the responsibility for and must be capable of effectively administering and promoting an active EEO program and who must be assigned adequate authority and responsibility to do so.

3. **Dissemination of Policy:** All members of the contractor's staff who are authorized to hire, supervise, promote, and discharge employees, or who recommend such action, or who are substantially involved in such action, will be made fully cognizant of, and will implement, the contractor's EEO policy and contractual responsibilities to provide EEO in each grade and classification of employment. To ensure that the above agreement will be met, the following actions will be taken as a minimum:

a. Periodic meetings of supervisory and personnel office employees will be conducted before the start of work and then not less often than once every six months, at which time the contractor's EEO policy and its implementation will be reviewed and explained. The meetings will be conducted by the EEO Officer.

b. All new supervisory or personnel office employees will be given a thorough indoctrination by the EEO Officer, covering all major aspects of the contractor's EEO obligations within thirty days following their reporting for duty with the contractor.

c. All personnel who are engaged in direct recruitment for the project will be instructed by the EEO Officer in the contractor's procedures for locating and hiring minorities and women.

d. Notices and posters setting forth the contractor's EEO policy will be placed in areas readily accessible to employees, applicants for employment and potential employees.

e. The contractor's EEO policy and the procedures to implement such policy will be brought to the attention of employees by means of meetings, employee handbooks, or other appropriate means.

4. **Recruitment:** When advertising for employees, the contractor will include in all advertisements for employees the notation: "An Equal Opportunity Employer." All such advertisements will be placed in publications having a large circulation among minorities and women in the area from which the project work force would normally be derived.

The contractor will, unless precluded by a valid bargaining agreement, conduct systematic and direct recruitment through public and private employee referral sources likely to yield qualified minorities and women. To meet this requirement, the contractor will identify sources of potential

minority group employees, and establish with such identified sources procedures whereby minority and women applicants may be referred to the contractor for employment consideration.

In the event the contractor has a valid bargaining agreement providing for exclusive hiring hall referrals, the contractor is expected to observe the provisions of that agreement to the extent that the system meets the contractor's compliance with EEO contract provisions. Where implementation of such an agreement has the effect of discriminating against minorities or women, or obligates the contractor to do the same, such implementation violates Federal nondiscrimination provisions.

The contractor will encourage its present employees to refer minorities and women as applicants for employment. Information and procedures with regard to referring such applicants will be discussed with employees.

5. **Personnel Actions:** Wages, working conditions, and employee benefits shall be established and administered, and personnel actions of every type, including hiring, upgrading, promotion, transfer, demotion, layoff, and termination, shall be taken without regard to race, color, religion, sex, national origin, age or disability. The following procedures shall be followed:

a. The contractor will conduct periodic inspections of project sites to insure that working conditions and employee facilities do not indicate discriminatory treatment of project site personnel.

b. The contractor will periodically evaluate the spread of wages paid within each classification to determine any evidence of discriminatory wage practices.

c. The contractor will periodically review selected personnel actions in depth to determine whether there is evidence of discrimination. Where evidence is found, the contractor will promptly take corrective action. If the review indicates that the discrimination may extend beyond the actions reviewed, such corrective action shall include all affected persons.

d. The contractor will promptly investigate all complaints of alleged discrimination made to the contractor in connection with its obligations under this contract, will attempt to resolve such complaints, and will take appropriate corrective action within a reasonable time. If the investigation indicates that the discrimination may affect persons other than the complainant, such corrective action shall include such other persons. Upon completion of each investigation, the contractor will inform every complainant of all of their avenues of appeal.

6. **Training and Promotion:**

a. The contractor will assist in locating, qualifying, and increasing the skills of minorities and women who are applicants for employment or current employees. Such efforts should be aimed at developing full journey level status employees in the type of trade or job classification involved.

b. Consistent with the contractor's work force requirements and as permissible under Federal and State regulations, the contractor shall make full use of training programs, i.e., apprenticeship, and on-the-job training programs for the geographical area of contract performance. In the event a special provision for training is provided under this contract, this subparagraph will be superseded as indicated in the special provision. The contracting agency may reserve training positions for persons who receive welfare assistance in accordance with 23 U.S.C. 140(a).

c. The contractor will advise employees and applicants for employment of available training programs and entrance requirements for each.

d. The contractor will periodically review the training and promotion potential of employees who are minorities and women and will encourage eligible employees to apply for such training and promotion.

7. **Unions:** If the contractor relies in whole or in part upon unions as a source of employees, the contractor will use good faith efforts to obtain the cooperation of such unions to increase opportunities for minorities and women. Actions by the contractor, either directly or through a contractor's association acting as agent, will include the procedures set forth below:

a The contractor will use good faith efforts to develop, in cooperation with the unions, joint training programs aimed toward qualifying more minorities and women for membership in the unions and increasing the skills of minorities and women so that they may qualify for higher paying employment.

b. The contractor will use good faith efforts to incorporate an EEO clause into each union agreement to the end that such union will be contractually bound to refer applicants without regard to their race, color, religion, sex, national origin, age or disability.

c. The contractor is to obtain information as to the referral practices and policies of the labor union except that to the extent such information is within the exclusive possession of the labor union and such labor union refuses to furnish such information to the contractor, the contractor shall so certify to the contracting agency and shall set forth what efforts have been made to obtain such information.

d. In the event the union is unable to provide the contractor with a reasonable flow of referrals within the time limit set forth in the collective bargaining agreement, the contractor will, through independent recruitment efforts, fill the employment vacancies without regard to race, color, religion, sex, national origin, age or disability; making full efforts to obtain qualified and/or qualifiable minorities and women. The failure of a union to provide sufficient referrals (even though it is obligated to provide exclusive referrals under the terms of a collective bargaining agreement) does not relieve the contractor from the requirements of this paragraph. In the event the union referral practice prevents the contractor from meeting the obligations pursuant to Executive Order 11246, as amended, and these special provisions, such contractor shall immediately notify the contracting agency.

8. **Reasonable Accommodation for Applicants / Employees with Disabilities:** The contractor must be familiar with the requirements for and comply with the Americans with Disabilities Act and all rules and regulations established there under. Employers must provide reasonable accommodation in all employment activities unless to do so would cause an undue hardship.

9. **Selection of Subcontractors, Procurement of Materials and Leasing of Equipment:** The contractor shall not discriminate on the grounds of race, color, religion, sex, national origin, age or disability in the selection and retention of subcontractors, including procurement of materials and leases of equipment. The contractor shall take all necessary and reasonable steps to ensure nondiscrimination in the administration of this contract.

a. The contractor shall notify all potential subcontractors and suppliers and lessors of their EEO obligations under this contract.

b. The contractor will use good faith efforts to ensure subcontractor compliance with their EEO obligations.

10. Assurance Required by 49 CFR 26.13(b):

a. The requirements of 49 CFR Part 26 and the State DOT's U.S. DOT-approved DBE program are incorporated by reference.

b. The contractor or subcontractor shall not discriminate on the basis of race, color, national origin, or sex in the performance of this contract. The contractor shall carry out applicable requirements of 49 CFR Part 26 in the award and administration of DOT-assisted contracts. Failure by the contractor to carry out these requirements is a material breach of this contract, which may result in the termination of this contract or such other remedy as the contracting agency deems appropriate.

11. Records and Reports: The contractor shall keep such records as necessary to document compliance with the EEO requirements. Such records shall be retained for a period of three years following the date of the final payment to the contractor for all contract work and shall be available at reasonable times and places for inspection by authorized representatives of the contracting agency and the FHWA.

a. The records kept by the contractor shall document the following:

(1) The number and work hours of minority and non-minority group members and women employed in each work classification on the project;

(2) The progress and efforts being made in cooperation with unions, when applicable, to increase employment opportunities for minorities and women; and

(3) The progress and efforts being made in locating, hiring, training, qualifying, and upgrading minorities and women;

b. The contractors and subcontractors will submit an annual report to the contracting agency each July for the duration of the project, indicating the number of minority, women, and non-minority group employees currently engaged in each work classification required by the contract work. This information is to be reported on Form FHWA-1391. The staffing data should represent the project work force on board in all or any part of the last payroll period preceding the end of July. If on-the-job training is being required by special provision, the contractor will be required to collect and report training data. The employment data should reflect the work force on board during all or any part of the last payroll period preceding the end of July.

III. NONSEGREGATED FACILITIES

This provision is applicable to all Federal-aid construction contracts and to all related construction subcontracts of $10,000 or more.

The contractor must ensure that facilities provided for employees are provided in such a manner that segregation on the basis of race, color, religion, sex, or national origin cannot result. The contractor may neither require such segregated use by written or oral policies nor tolerate such use by employee custom. The contractor's obligation extends further to ensure that its employees are not assigned to perform their services at any location, under the contractor's control, where the facilities are segregated. The term "facilities" includes waiting rooms, work areas, restaurants and other eating areas, time clocks, restrooms, washrooms, locker rooms, and other storage or dressing areas, parking lots, drinking fountains, recreation or entertainment areas, transportation, and housing provided for employees. The contractor shall provide separate or single-user restrooms and necessary dressing or sleeping areas to assure privacy between sexes.

IV. Davis-Bacon and Related Act Provisions

This section is applicable to all Federal-aid construction projects exceeding $2,000 and to all related subcontracts and lower-tier subcontracts (regardless of subcontract size). The requirements apply to all projects located within the right-of-way of a roadway that is functionally classified as Federal-aid highway. This excludes roadways functionally classified as local roads or rural minor collectors, which are exempt. Contracting agencies may elect to apply these requirements to other projects.

The following provisions are from the U.S. Department of Labor regulations in 29 CFR 5.5 "Contract provisions and related matters" with minor revisions to conform to the FHWA-1273 format and FHWA program requirements.

1. Minimum wages

a. All laborers and mechanics employed or working upon the site of the work, will be paid unconditionally and not less often than once a week, and without subsequent deduction or rebate on any account (except such payroll deductions as are permitted by regulations issued by the Secretary of Labor under the Copeland Act (29 CFR part 3)), the full amount of wages and bona fide fringe benefits (or cash equivalents thereof) due at time of payment computed at rates not less than those contained in the wage determination of the Secretary of Labor which is attached hereto and made a part hereof, regardless of any contractual relationship which may be alleged to exist between the contractor and such laborers and mechanics.

Contributions made or costs reasonably anticipated for bona fide fringe benefits under section 1(b)(2) of the Davis-Bacon Act on behalf of laborers or mechanics are considered wages paid to such laborers or mechanics, subject to the provisions of paragraph 1.d. of this section; also, regular contributions made or costs incurred for more than a weekly period (but not less often than quarterly) under plans, funds, or programs which cover the particular weekly period, are deemed to be constructively made or incurred during such weekly period. Such laborers and mechanics shall be paid the appropriate wage rate and fringe benefits on the wage determination for the classification of work actually performed, without regard to skill, except as provided in 29 CFR 5.5(a)(4). Laborers or mechanics performing work in more than one classification may be compensated at the rate specified for each classification for the time actually worked therein: Provided, That the employer's payroll records accurately set forth the time spent in each classification in which work is performed. The wage determination (including any additional classification and wage rates conformed under paragraph 1.b. of this section) and the Davis-Bacon poster (WH–1321) shall be posted at all times by the contractor and its subcontractors at the site of the work in a prominent and accessible place where it can be easily seen by the workers.

b. (1) The contracting officer shall require that any class of laborers or mechanics, including helpers, which is not listed in the wage determination and which is to be employed under the contract shall be classified in conformance with the wage determination. The contracting officer shall approve an additional classification and wage rate and fringe benefits therefore only when the following criteria have been met:

(I) The work to be performed by the classification requested is not performed by a classification in the wage determination; and

(II) The classification is utilized in the area by the construction industry; and

(II) The proposed wage rate, including any bona fide fringe benefits, bears a reasonable relationship to the wage rates contained in the wage determination.

(2) If the contractor and the laborers and mechanics to be employed in the classification (if known), or their representatives, and the contracting officer agree on the classification and wage rate (including the amount designated for fringe benefits where appropriate), a report of the action taken shall be sent by the contracting officer to the Administrator of the Wage and Hour Division, Employment Standards Administration, U.S. Department of Labor, Washington, DC 20210. The Administrator, or an authorized representative, will approve, modify, or disapprove every additional classification action within 30 days of receipt and so advise the contracting officer or will notify the contracting officer within the 30-day period that additional time is necessary.

(3) In the event the contractor, the laborers or mechanics to be employed in the classification or their representatives, and the contracting officer do not agree on the proposed classification and wage rate (including the amount designated for fringe benefits, where appropriate), the contracting officer shall refer the questions, including the views of all interested parties and the recommendation of the contracting officer, to the Wage and Hour Administrator for determination. The Wage and Hour Administrator, or an authorized representative, will issue a determination within 30 days of receipt and so advise the contracting officer or will notify the contracting officer within the 30-day period that additional time is necessary.

(4) The wage rate (including fringe benefits where appropriate) determined pursuant to paragraphs 1.b.(2) or 1.b.(3) of this section, shall be paid to all workers performing work in the classification under this contract from the first day on which work is performed in the classification.

c. Whenever the minimum wage rate prescribed in the contract for a class of laborers or mechanics includes a fringe benefit which is not expressed as an hourly rate, the contractor shall either pay the benefit as stated in the wage determination or shall pay another bona fide fringe benefit or an hourly cash equivalent thereof.

d. If the contractor does not make payments to a trustee or other third person, the contractor may consider as part of the wages of any laborer or mechanic the amount of any costs reasonably anticipated in providing bona fide fringe benefits under a plan or program, Provided, That the Secretary of Labor has found, upon the written request of the contractor, that the applicable standards of the Davis-Bacon Act have been met. The Secretary of Labor may require the contractor to set aside in a separate account assets for the meeting of obligations under the plan or program.

2. Withholding

The contracting agency shall upon its own action or upon written request of an authorized representative of the Department of Labor, withhold or cause to be withheld from the contractor under this contract, or any other Federal contract with the same prime

contractor, or any other federally-assisted contract subject to Davis-Bacon prevailing wage requirements, which is held by the same prime contractor, so much of the accrued payments or advances as may be considered necessary to pay laborers and mechanics, including apprentices, trainees, and helpers, employed by the contractor or any subcontractor the full amount of wages required by the contract. In the event of failure to pay any laborer or mechanic, including any apprentice, trainee, or helper, employed or working on the site of the work, all or part of the wages required by the contract, the contracting agency may, after written notice to the contractor, take such action as may be necessary to cause the suspension of any further payment, advance, or guarantee of funds until such violations have ceased.

3. Payrolls and basic records

a. Payrolls and basic records relating thereto shall be maintained by the contractor during the course of the work and preserved for a period of three years thereafter for all laborers and mechanics working at the site of the work. Such records shall contain the name, address, and social security number of each such worker, his or her correct classification, hourly rates of wages paid (including rates of contributions or costs anticipated for bona fide fringe benefits or cash equivalents thereof of the types described in section 1(b)(2)(B) of the Davis-Bacon Act), daily and weekly number of hours worked, deductions made and actual wages paid. Whenever the Secretary of Labor has found under 29 CFR 5.5(a)(1)(iv) that the wages of any laborer or mechanic include the amount of any costs reasonably anticipated in providing benefits under a plan or program described in section 1(b)(2)(B) of the Davis-Bacon Act, the contractor shall maintain records which show that the commitment to provide such benefits is enforceable, that the plan or program is financially responsible, and that the plan or program has been communicated in writing to the laborers or mechanics affected, and records which show the costs anticipated or the actual cost incurred in providing such benefits. Contractors employing apprentices or trainees under approved programs shall maintain written evidence of the registration of apprenticeship programs and certification of trainee programs, the registration of the apprentices and trainees, and the ratios and wage rates prescribed in the applicable programs.

b. (1) The contractor shall submit weekly for each week in which any contract work is performed a copy of all payrolls to the contracting agency. The payrolls submitted shall set out accurately and completely all of the information required to be maintained under 29 CFR 5.5(a)(3)(i), except that full social security numbers and home addresses shall not be included on weekly transmittals. Instead the payrolls shall only need to include an individually identifying number for each employee (e.g. , the last four digits of the employee's social security number). The required weekly payroll information may be submitted in any form desired. Optional Form WH–347 is available for this purpose from the Wage and Hour Division Web site at http://www.dol.gov/esa/whd/forms/wh347instr.htm or its successor site. The prime contractor is responsible for the submission of copies of payrolls by all subcontractors. Contractors and subcontractors shall maintain the full social security number and current address of each covered worker, and shall provide them upon request to the contracting agency for transmission to the State DOT, the FHWA or the Wage and Hour Division of the Department of Labor for purposes of an investigation or audit of compliance with prevailing wage requirements. It is not a violation of this section for a prime contractor to require a subcontractor

to provide addresses and social security numbers to the prime contractor for its own records, without weekly submission to the contracting agency.

(2) Each payroll submitted shall be accompanied by a "Statement of Compliance," signed by the contractor or subcontractor or his or her agent who pays or supervises the payment of the persons employed under the contract and shall certify the following:

(I) That the payroll for the payroll period contains the information required to be provided under §5.5 (a)(3)(ii) of Regulations, 29 CFR part 5, the appropriate information is being maintained under §5.5 (a)(3)(i) of Regulations, 29 CFR part 5, and that such information is correct and complete;

(II) That each laborer or mechanic (including each helper, apprentice, and trainee) employed on the contract during the payroll period has been paid the full weekly wages earned, without rebate, either directly or indirectly, and that no deductions have been made either directly or indirectly from the full wages earned, other than permissible deductions as set forth in Regulations, 29 CFR part 3;

(III) That each laborer or mechanic has been paid not less than the applicable wage rates and fringe benefits or cash equivalents for the classification of work performed, as specified in the applicable wage determination incorporated into the contract.

(3) The weekly submission of a properly executed certification set forth on the reverse side of Optional Form WH–347 shall satisfy the requirement for submission of the "Statement of Compliance" required by paragraph 3.b.(2) of this section.

(4) The falsification of any of the above certifications may subject the contractor or subcontractor to civil or criminal prosecution under section 1001 of title 18 and section 231 of title 31 of the United States Code.

c. The contractor or subcontractor shall make the records required under paragraph 3.a. of this section available for inspection, copying, or transcription by authorized representatives of the contracting agency, the State DOT, the FHWA, or the Department of Labor, and shall permit such representatives to interview employees during working hours on the job. If the contractor or subcontractor fails to submit the required records or to make them available, the FHWA may, after written notice to the contractor, the contracting agency or the State DOT, take such action as may be necessary to cause the suspension of any further payment, advance, or guarantee of funds. Furthermore, failure to submit the required records upon request or to make such records available may be grounds for debarment action pursuant to 29 CFR 5.12.

4. Apprentices and trainees

a. Apprentices (programs of the USDOL).

Apprentices will be permitted to work at less than the predetermined rate for the work they performed when they are employed pursuant to and individually registered in a bona fide apprenticeship program registered with the U.S. Department of Labor, Employment and Training Administration, Office of

Apprenticeship Training, Employer and Labor Services, or with a State Apprenticeship Agency recognized by the Office, or if a person is employed in his or her first 90 days of probationary employment as an apprentice in such an apprenticeship program, who is not individually registered in the program, but who has been certified by the Office of Apprenticeship Training, Employer and Labor Services or a State Apprenticeship Agency (where appropriate) to be eligible for probationary employment as an apprentice.

The allowable ratio of apprentices to journeymen on the job site in any craft classification shall not be greater than the ratio permitted to the contractor as to the entire work force under the registered program. Any worker listed on a payroll at an apprentice wage rate, who is not registered or otherwise employed as stated above, shall be paid not less than the applicable wage rate on the wage determination for the classification of work actually performed. In addition, any apprentice performing work on the job site in excess of the ratio permitted under the registered program shall be paid not less than the applicable wage rate on the wage determination for the work actually performed. Where a contractor is performing construction on a project in a locality other than that in which its program is registered, the ratios and wage rates (expressed in percentages of the journeyman's hourly rate) specified in the contractor's or subcontractor's registered program shall be observed.

Every apprentice must be paid at not less than the rate specified in the registered program for the apprentice's level of progress, expressed as a percentage of the journeymen hourly rate specified in the applicable wage determination. Apprentices shall be paid fringe benefits in accordance with the provisions of the apprenticeship program. If the apprenticeship program does not specify fringe benefits, apprentices must be paid the full amount of fringe benefits listed on the wage determination for the applicable classification. If the Administrator determines that a different practice prevails for the applicable apprentice classification, fringes shall be paid in accordance with that determination.

In the event the Office of Apprenticeship Training, Employer and Labor Services, or a State Apprenticeship Agency recognized by the Office, withdraws approval of an apprenticeship program, the contractor will no longer be permitted to utilize apprentices at less than the applicable predetermined rate for the work performed until an acceptable program is approved.

b. Trainees (programs of the USDOL).

Except as provided in 29 CFR 5.16, trainees will not be permitted to work at less than the predetermined rate for the work performed unless they are employed pursuant to and individually registered in a program which has received prior approval, evidenced by formal certification by the U.S. Department of Labor, Employment and Training Administration.

The ratio of trainees to journeymen on the job site shall not be greater than permitted under the plan approved by the Employment and Training Administration.

Every trainee must be paid at not less than the rate specified in the approved program for the trainee's level of progress, expressed as a percentage of the journeyman hourly rate specified in the applicable wage determination. Trainees shall be paid fringe benefits in accordance with the provisions of the trainee program. If the trainee program does not mention fringe benefits, trainees shall be paid the full amount of fringe benefits listed on the wage determination unless

the Administrator of the Wage and Hour Division determines that there is an apprenticeship program associated with the corresponding journeyman wage rate on the wage determination which provides for less than full fringe benefits for apprentices. Any employee listed on the payroll at a trainee rate who is not registered and participating in a training plan approved by the Employment and Training Administration shall be paid not less than the applicable wage rate on the wage determination for the classification of work actually performed. In addition, any trainee performing work on the job site in excess of the ratio permitted under the registered program shall be paid not less than the applicable wage rate on the wage determination for the work actually performed.

In the event the Employment and Training Administration withdraws approval of a training program, the contractor will no longer be permitted to utilize trainees at less than the applicable predetermined rate for the work performed until an acceptable program is approved.

c. Equal employment opportunity. The utilization of apprentices, trainees and journeymen under this part shall be in conformity with the equal employment opportunity requirements of Executive Order 11246, as amended, and 29 CFR part 30.

d. Apprentices and Trainees (programs of the U.S. DOT).

Apprentices and trainees working under apprenticeship and skill training programs which have been certified by the Secretary of Transportation as promoting EEO in connection with Federal-aid highway construction programs are not subject to the requirements of paragraph 4 of this Section IV. The straight time hourly wage rates for apprentices and trainees under such programs will be established by the particular programs. The ratio of apprentices and trainees to journeymen shall not be greater than permitted by the terms of the particular program.

5. **Compliance with Copeland Act requirements.** The contractor shall comply with the requirements of 29 CFR part 3, which are incorporated by reference in this contract.

6. **Subcontracts.** The contractor or subcontractor shall insert Form FHWA-1273 in any subcontracts and also require the subcontractors to include Form FHWA-1273 in any lower tier subcontracts. The prime contractor shall be responsible for the compliance by any subcontractor or lower tier subcontractor with all the contract clauses in 29 CFR 5.5.

7. **Contract termination: debarment.** A breach of the contract clauses in 29 CFR 5.5 may be grounds for termination of the contract, and for debarment as a contractor and a subcontractor as provided in 29 CFR 5.12.

8. **Compliance with Davis-Bacon and Related Act requirements.** All rulings and interpretations of the Davis-Bacon and Related Acts contained in 29 CFR parts 1, 3, and 5 are herein incorporated by reference in this contract.

9. **Disputes concerning labor standards.** Disputes arising out of the labor standards provisions of this contract shall not be subject to the general disputes clause of this contract. Such disputes shall be resolved in accordance with the procedures of the Department of Labor set forth in 29 CFR parts 5, 6, and 7. Disputes within the meaning of this clause include disputes between the contractor (or any of its subcontractors) and the contracting agency, the U.S. Department of Labor, or the employees or their representatives.

10. Certification of eligibility.

a. By entering into this contract, the contractor certifies that neither it (nor he or she) nor any person or firm who has an interest in the contractor's firm is a person or firm ineligible to be awarded Government contracts by virtue of section 3(a) of the Davis-Bacon Act or 29 CFR 5.12(a)(1).

b. No part of this contract shall be subcontracted to any person or firm ineligible for award of a Government contract by virtue of section 3(a) of the Davis-Bacon Act or 29 CFR 5.12(a)(1).

c. The penalty for making false statements is prescribed in the U.S. Criminal Code, 18 U.S.C. 1001.

V. CONTRACT WORK HOURS AND SAFETY STANDARDS ACT

The following clauses apply to any Federal-aid construction contract in an amount in excess of $100,000 and subject to the overtime provisions of the Contract Work Hours and Safety Standards Act. These clauses shall be inserted in addition to the clauses required by 29 CFR 5.5(a) or 29 CFR 4.6. As used in this paragraph, the terms laborers and mechanics include watchmen and guards.

1. Overtime requirements. No contractor or subcontractor contracting for any part of the contract work which may require or involve the employment of laborers or mechanics shall require or permit any such laborer or mechanic in any workweek in which he or she is employed on such work to work in excess of forty hours in such workweek unless such laborer or mechanic receives compensation at a rate not less than one and one-half times the basic rate of pay for all hours worked in excess of forty hours in such workweek.

2. Violation; liability for unpaid wages; liquidated damages. In the event of any violation of the clause set forth in paragraph (1.) of this section, the contractor and any subcontractor responsible therefor shall be liable for the unpaid wages. In addition, such contractor and subcontractor shall be liable to the United States (in the case of work done under contract for the District of Columbia or a territory, to such District or to such territory), for liquidated damages. Such liquidated damages shall be computed with respect to each individual laborer or mechanic, including watchmen and guards, employed in violation of the clause set forth in paragraph (1.) of this section, in the sum of $10 for each calendar day on which such individual was required or permitted to work in excess of the standard workweek of forty hours without payment of the overtime wages required by the clause set forth in paragraph (1.) of this section.

3. Withholding for unpaid wages and liquidated damages. The FHWA or the contacting agency shall upon its own action or upon written request of an authorized representative of the Department of Labor withhold or cause to be withheld, from any moneys payable on account of work performed by the contractor or subcontractor under any such contract or any other Federal contract with the same prime contractor, or any other federally-assisted contract subject to the Contract Work Hours and Safety Standards Act, which is held by the same prime contractor, such sums as may be determined to be necessary to satisfy any liabilities of such contractor or subcontractor for unpaid wages and liquidated damages as provided in the clause set forth in paragraph (2.) of this section.

4. Subcontracts. The contractor or subcontractor shall insert in any subcontracts the clauses set forth in paragraph (1.) through (4.) of this section and also a clause requiring the subcontractors to include these clauses in any lower tier subcontracts. The prime

contractor shall be responsible for compliance by any subcontractor or lower tier subcontractor with the clauses set forth in paragraphs (1.) through (4.) of this section.

VI. SUBLETTING OR ASSIGNING THE CONTRACT

This provision is applicable to all Federal-aid construction contracts on the National Highway System.

1. The contractor shall perform with its own organization contract work amounting to not less than 30 percent (or a greater percentage if specified elsewhere in the contract) of the total original contract price, excluding any specialty items designated by the contracting agency. Specialty items may be performed by subcontract and the amount of any such specialty items performed may be deducted from the total original contract price before computing the amount of work required to be performed by the contractor's own organization (23 CFR 635.116).

   a. The term “perform work with its own organization” refers to workers employed or leased by the prime contractor, and equipment owned or rented by the prime contractor, with or without operators. Such term does not include employees or equipment of a subcontractor or lower tier subcontractor, agents of the prime contractor, or any other assignees. The term may include payments for the costs of hiring leased employees from an employee leasing firm meeting all relevant Federal and State regulatory requirements. Leased employees may only be included in this term if the prime contractor meets all of the following conditions:

      (1) the prime contractor maintains control over the supervision of the day-to-day activities of the leased employees;

      (2) the prime contractor remains responsible for the quality of the work of the leased employees;

      (3) the prime contractor retains all power to accept or exclude individual employees from work on the project; and

      (4) the prime contractor remains ultimately responsible for the payment of predetermined minimum wages, the submission of payrolls, statements of compliance and all other Federal regulatory requirements.

   b. "Specialty Items" shall be construed to be limited to work that requires highly specialized knowledge, abilities, or equipment not ordinarily available in the type of contracting organizations qualified and expected to bid or propose on the contract as a whole and in general are to be limited to minor components of the overall contract.

2. The contract amount upon which the requirements set forth in paragraph (1) of Section VI is computed includes the cost of material and manufactured products which are to be purchased or produced by the contractor under the contract provisions.

3. The contractor shall furnish (a) a competent superintendent or supervisor who is employed by the firm, has full authority to direct performance of the work in accordance with the contract requirements, and is in charge of all construction operations (regardless of who performs the work) and (b) such other of its own organizational resources (supervision, management, and engineering services) as the contracting officer determines is necessary to assure the performance of the contract.

4. No portion of the contract shall be sublet, assigned or otherwise disposed of except with the written consent of the contracting officer, or authorized representative, and such consent when given shall not be construed to relieve the contractor of any responsibility for the fulfillment of the

contract. Written consent will be given only after the contracting agency has assured that each subcontract is evidenced in writing and that it contains all pertinent provisions and requirements of the prime contract.

5. The 30% self-performance requirement of paragraph (1) is not applicable to design-build contracts; however, contracting agencies may establish their own self-performance requirements.

VII. SAFETY: ACCIDENT PREVENTION

This provision is applicable to all Federal-aid construction contracts and to all related subcontracts.

1. In the performance of this contract the contractor shall comply with all applicable Federal, State, and local laws governing safety, health, and sanitation (23 CFR 635). The contractor shall provide all safeguards, safety devices and protective equipment and take any other needed actions as it determines, or as the contracting officer may determine, to be reasonably necessary to protect the life and health of employees on the job and the safety of the public and to protect property in connection with the performance of the work covered by the contract.

2. It is a condition of this contract, and shall be made a condition of each subcontract, which the contractor enters into pursuant to this contract, that the contractor and any subcontractor shall not permit any employee, in performance of the contract, to work in surroundings or under conditions which are unsanitary, hazardous or dangerous to his/her health or safety, as determined under construction safety and health standards (29 CFR 1926) promulgated by the Secretary of Labor, in accordance with Section 107 of the Contract Work Hours and Safety Standards Act (40 U.S.C. 3704).

3. Pursuant to 29 CFR 1926.3, it is a condition of this contract that the Secretary of Labor or authorized representative thereof, shall have right of entry to any site of contract performance to inspect or investigate the matter of compliance with the construction safety and health standards and to carry out the duties of the Secretary under Section 107 of the Contract Work Hours and Safety Standards Act (40 U.S.C.3704).

VIII. FALSE STATEMENTS CONCERNING HIGHWAY PROJECTS

This provision is applicable to all Federal-aid construction contracts and to all related subcontracts.

In order to assure high quality and durable construction in conformity with approved plans and specifications and a high degree of reliability on statements and representations made by engineers, contractors, suppliers, and workers on Federal-aid highway projects, it is essential that all persons concerned with the project perform their functions as carefully, thoroughly, and honestly as possible. Willful falsification, distortion, or misrepresentation with respect to any facts related to the project is a violation of Federal law. To prevent any misunderstanding regarding the seriousness of these and similar acts, Form FHWA-1022 shall be posted on each Federal-aid highway project (23 CFR 635) in one or more places where it is readily available to all persons concerned with the project:

18 U.S.C. 1020 reads as follows:

> "Whoever, being an officer, agent, or employee of the United States, or of any State or Territory, or whoever, whether a person, association, firm, or corporation, knowingly makes any false statement, false representation, or false report as to the character, quality, quantity, or cost of the material used or to be used, or the quantity or quality of the work performed or to be performed, or the cost thereof in connection with the submission of plans, maps, specifications, contracts, or costs of construction on any highway or related project submitted for approval to the Secretary of Transportation; or

Whoever knowingly makes any false statement, false representation, false report or false claim with respect to the character, quality, quantity, or cost of any work performed or to be performed, or materials furnished or to be furnished, in connection with the construction of any highway or related project approved by the Secretary of Transportation; or

Whoever knowingly makes any false statement or false representation as to material fact in any statement, certificate, or report submitted pursuant to provisions of the Federal-aid Roads Act approved July 1, 1916, (39 Stat. 355), as amended and supplemented;

Shall be fined under this title or imprisoned not more than 5 years or both."

IX. IMPLEMENTATION OF CLEAN AIR ACT AND FEDERAL WATER POLLUTION CONTROL ACT

This provision is applicable to all Federal-aid construction contracts and to all related subcontracts.

By submission of this bid/proposal or the execution of this contract, or subcontract, as appropriate, the bidder, proposer, Federal-aid construction contractor, or subcontractor, as appropriate, will be deemed to have stipulated as follows:

1. That any person who is or will be utilized in the performance of this contract is not prohibited from receiving an award due to a violation of Section 508 of the Clean Water Act or Section 306 of the Clean Air Act.

2. That the contractor agrees to include or cause to be included the requirements of paragraph (1) of this Section X in every subcontract, and further agrees to take such action as the contracting agency may direct as a means of enforcing such requirements.

X. CERTIFICATION REGARDING DEBARMENT, SUSPENSION, INELIGIBILITY AND VOLUNTARY EXCLUSION

This provision is applicable to all Federal-aid construction contracts, design-build contracts, subcontracts, lower-tier subcontracts, purchase orders, lease agreements, consultant contracts or any other covered transaction requiring FHWA approval or that is estimated to cost $25,000 or more – as defined in 2 CFR Parts 180 and 1200.

1. Instructions for Certification – First Tier Participants:

a. By signing and submitting this proposal, the prospective first tier participant is providing the certification set out below.

b. The inability of a person to provide the certification set out below will not necessarily result in denial of participation in this covered transaction. The prospective first tier participant shall submit an explanation of why it cannot provide the certification set out below. The certification or explanation will be considered in connection with the department or agency's determination whether to enter into this transaction. However, failure of the prospective first tier participant to furnish a certification or an explanation shall disqualify such a person from participation in this transaction.

c. The certification in this clause is a material representation of fact upon which reliance was placed when the contracting agency determined to enter into this transaction. If it is later determined that the prospective participant knowingly rendered an erroneous certification, in addition to other remedies available to the Federal Government, the contracting agency may terminate this transaction for cause of default.

d. The prospective first tier participant shall provide immediate written notice to the contracting agency to whom this proposal is submitted if any time the prospective first tier participant learns that its certification was erroneous when submitted or has become erroneous by reason of changed circumstances.

e. The terms "covered transaction," "debarred," "suspended," "ineligible," "participant," "person," "principal," and "voluntarily excluded," as used in this clause, are defined in 2 CFR Parts 180 and 1200. “First Tier Covered Transactions” refers to any covered transaction between a grantee or subgrantee of Federal funds and a participant (such as the prime or general contract). “Lower Tier Covered Transactions” refers to any covered transaction under a First Tier Covered Transaction (such as subcontracts). “First Tier Participant” refers to the participant who has entered into a covered transaction with a grantee or subgrantee of Federal funds (such as the prime or general contractor). “Lower Tier Participant” refers any participant who has entered into a covered transaction with a First Tier Participant or other Lower Tier Participants (such as subcontractors and suppliers).

f. The prospective first tier participant agrees by submitting this proposal that, should the proposed covered transaction be entered into, it shall not knowingly enter into any lower tier covered transaction with a person who is debarred, suspended, declared ineligible, or voluntarily excluded from participation in this covered transaction, unless authorized by the department or agency entering into this transaction.

g. The prospective first tier participant further agrees by submitting this proposal that it will include the clause titled "Certification Regarding Debarment, Suspension, Ineligibility and Voluntary Exclusion-Lower Tier Covered Transactions," provided by the department or contracting agency, entering into this covered transaction, without modification, in all lower tier covered transactions and in all solicitations for lower tier covered transactions exceeding the $25,000 threshold.

h. A participant in a covered transaction may rely upon a certification of a prospective participant in a lower tier covered transaction that is not debarred, suspended, ineligible, or voluntarily excluded from the covered transaction, unless it knows that the certification is erroneous. A participant is responsible for ensuring that its principals are not suspended, debarred, or otherwise ineligible to participate in covered transactions. To verify the eligibility of its principals, as well as the eligibility of any lower tier prospective participants, each participant may, but is not required to, check the Excluded Parties List System website (https://www.epls.gov/), which is compiled by the General Services Administration.

i. Nothing contained in the foregoing shall be construed to require the establishment of a system of records in order to render in good faith the certification required by this clause. The knowledge and information of the prospective participant is not required to exceed that which is normally possessed by a prudent person in the ordinary course of business dealings.

j. Except for transactions authorized under paragraph (f) of these instructions, if a participant in a covered transaction knowingly enters into a lower tier covered transaction with a person who is suspended, debarred, ineligible, or voluntarily excluded from participation in this transaction, in addition to other remedies available to the Federal Government, the department or agency may terminate this transaction for cause or default.

* * * * *

2. Certification Regarding Debarment, Suspension, Ineligibility and Voluntary Exclusion – First Tier Participants:

a. The prospective first tier participant certifies to the best of its knowledge and belief, that it and its principals:

(1) Are not presently debarred, suspended, proposed for debarment, declared ineligible, or voluntarily excluded from participating in covered transactions by any Federal department or agency;

(2) Have not within a three-year period preceding this proposal been convicted of or had a civil judgment rendered against them for commission of fraud or a criminal offense in connection with obtaining, attempting to obtain, or performing a public (Federal, State or local) transaction or contract under a public transaction; violation of Federal or State antitrust statutes or commission of embezzlement, theft, forgery, bribery, falsification or destruction of records, making false statements, or receiving stolen property;

(3) Are not presently indicted for or otherwise criminally or civilly charged by a governmental entity (Federal, State or local) with commission of any of the offenses enumerated in paragraph (a)(2) of this certification; and

(4) Have not within a three-year period preceding this application/proposal had one or more public transactions (Federal, State or local) terminated for cause or default.

b. Where the prospective participant is unable to certify to any of the statements in this certification, such prospective participant shall attach an explanation to this proposal.

2. Instructions for Certification - Lower Tier Participants:

(Applicable to all subcontracts, purchase orders and other lower tier transactions requiring prior FHWA approval or estimated to cost $25,000 or more - 2 CFR Parts 180 and 1200)

a. By signing and submitting this proposal, the prospective lower tier is providing the certification set out below.

b. The certification in this clause is a material representation of fact upon which reliance was placed when this transaction was entered into. If it is later determined that the prospective lower tier participant knowingly rendered an erroneous certification, in addition to other remedies available to the Federal Government, the department, or agency with which this transaction originated may pursue available remedies, including suspension and/or debarment.

c. The prospective lower tier participant shall provide immediate written notice to the person to which this proposal is submitted if at any time the prospective lower tier participant learns that its certification was erroneous by reason of changed circumstances.

d. The terms "covered transaction," "debarred," "suspended," "ineligible," "participant," "person," "principal," and "voluntarily excluded," as used in this clause, are defined in 2 CFR Parts 180 and 1200. You may contact the person to which this proposal is submitted for assistance in obtaining a copy of those regulations. “First Tier Covered Transactions” refers to any covered transaction between a grantee or subgrantee of Federal funds and a participant (such as the prime or general contract). “Lower Tier Covered Transactions” refers to any covered transaction under a First Tier Covered Transaction (such as subcontracts). “First Tier Participant” refers to the participant who

has entered into a covered transaction with a grantee or subgrantee of Federal funds (such as the prime or general contractor). “Lower Tier Participant” refers any participant who has entered into a covered transaction with a First Tier Participant or other Lower Tier Participants (such as subcontractors and suppliers).

e. The prospective lower tier participant agrees by submitting this proposal that, should the proposed covered transaction be entered into, it shall not knowingly enter into any lower tier covered transaction with a person who is debarred, suspended, declared ineligible, or voluntarily excluded from participation in this covered transaction, unless authorized by the department or agency with which this transaction originated.

f. The prospective lower tier participant further agrees by submitting this proposal that it will include this clause titled "Certification Regarding Debarment, Suspension, Ineligibility and Voluntary Exclusion-Lower Tier Covered Transaction," without modification, in all lower tier covered transactions and in all solicitations for lower tier covered transactions exceeding the $25,000 threshold.

g. A participant in a covered transaction may rely upon a certification of a prospective participant in a lower tier covered transaction that is not debarred, suspended, ineligible, or voluntarily excluded from the covered transaction, unless it knows that the certification is erroneous. A participant is responsible for ensuring that its principals are not suspended, debarred, or otherwise ineligible to participate in covered transactions. To verify the eligibility of its principals, as well as the eligibility of any lower tier prospective participants, each participant may, but is not required to, check the Excluded Parties List System website (https://www.epls.gov/), which is compiled by the General Services Administration.

h. Nothing contained in the foregoing shall be construed to require establishment of a system of records in order to render in good faith the certification required by this clause. The knowledge and information of participant is not required to exceed that which is normally possessed by a prudent person in the ordinary course of business dealings.

i. Except for transactions authorized under paragraph e of these instructions, if a participant in a covered transaction knowingly enters into a lower tier covered transaction with a person who is suspended, debarred, ineligible, or voluntarily excluded from participation in this transaction, in addition to other remedies available to the Federal Government, the department or agency with which this transaction originated may pursue available remedies, including suspension and/or debarment.

* * * * *

Certification Regarding Debarment, Suspension, Ineligibility and Voluntary Exclusion--Lower Tier Participants:

1. The prospective lower tier participant certifies, by submission of this proposal, that neither it nor its principals is presently debarred, suspended, proposed for debarment, declared ineligible, or voluntarily excluded from participating in covered transactions by any Federal department or agency.

2. Where the prospective lower tier participant is unable to certify to any of the statements in this certification, such prospective participant shall attach an explanation to this proposal.

* * * * *

XI. CERTIFICATION REGARDING USE OF CONTRACT FUNDS FOR LOBBYING

This provision is applicable to all Federal-aid construction contracts and to all related subcontracts which exceed $100,000 (49 CFR 20).

1. The prospective participant certifies, by signing and submitting this bid or proposal, to the best of his or her knowledge and belief, that:

   a. No Federal appropriated funds have been paid or will be paid, by or on behalf of the undersigned, to any person for influencing or attempting to influence an officer or employee of any Federal agency, a Member of Congress, an officer or employee of Congress, or an employee of a Member of Congress in connection with the awarding of any Federal contract, the making of any Federal grant, the making of any Federal loan, the entering into of any cooperative agreement, and the extension, continuation, renewal, amendment, or modification of any Federal contract, grant, loan, or cooperative agreement.

   b. If any funds other than Federal appropriated funds have been paid or will be paid to any person for influencing or attempting to influence an officer or employee of any Federal agency, a Member of Congress, an officer or employee of Congress, or an employee of a Member of Congress in connection with this Federal contract, grant, loan, or cooperative agreement, the undersigned shall complete and submit Standard Form-LLL, "Disclosure Form to Report Lobbying," in accordance with its instructions.

2. This certification is a material representation of fact upon which reliance was placed when this transaction was made or entered into. Submission of this certification is a prerequisite for making or entering into this transaction imposed by 31 U.S.C. 1352. Any person who fails to file the required certification shall be subject to a civil penalty of not less than $10,000 and not more than $100,000 for each such failure.

3. The prospective participant also agrees by submitting its bid or proposal that the participant shall require that the language of this certification be included in all lower tier subcontracts, which exceed $100,000 and that all such recipients shall certify and disclose accordingly.

PREDETERMINED MINIMUM WAGE RATES

U.S. DEPARTMENT OF LABOR
OFFICE OF THE SECRETARY
WASHINGTON

DECISION OF THE SECRETARY

This case is before the Department of Labor pursuant to a request for a wage predetermination as required by law applicable to the work described.

A study has been made of wage conditions in the locality and based on information available to the Department of Labor the wage rates and fringe payments listed are hereby determined by the Secretary of Labor as prevailing for the described classes for labor in accordance with applicable law.

This wage determination decision and any modifications thereof during the period prior to the stated expiration date shall be made a part of every contract for performance of the described work as provided by applicable law and regulations of the Secretary of Labor, and the wage rates and fringe payments contained in this decision, including modifications, shall be the minimums to be paid under any such contract and subcontractors on the work.

The contracting officer shall require that any class of laborers and mechanics which is not listed in the wage determination and which is to be employed under the contract, shall be classified or reclassified conformably to the wage determination, and a report of the action taken shall be sent by the Federal agency to the Secretary of Labor. In the event the interested parties cannot agree on the proper classification or reclassification of a particular class of laborers and mechanics to be used, the question accompanied by the recommendation of the contracting officer shall be referred to the Secretary for determination.

Before using apprentices on the job the contractor shall present to the contracting officer written evidence of registration of such employees in a program of a State apprenticeship and training agency approved and recognized by the U.S. Bureau of Apprenticeship and Training. In the absence of such a State agency, the contractor shall submit evidence of approval and registration by the U.S. Bureau of Apprenticeship and Training.

The contractor shall submit to the contracting officer written evidence of the established apprentice-journeyman ratios and wage in the project area, which will be the basis for establishing such ratios and rates for the project under the applicable contract provisions.

Fringe payments include medical and hospital care, compensation for injuries or illness resulting from occupational activity, unemployment benefits, life insurance, disability and sickness insurance, accident insurance (all designated as health and welfare), pensions, vacation and holiday pay, apprenticeship or other similar programs and other bona fide fringe benefits.

By direction of the Secretary of Labor

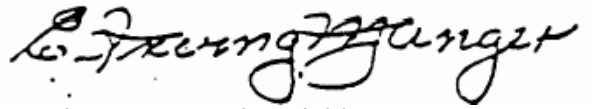

E. Irving Manger, Associate Administrator
Division of Wage Determinations
Wage and Labor Standards Administration

General Decision Number: VA150129 01/02/2015 VA129

Superseded General Decision Number: VA20140129

State: Virginia

Construction Type: Highway

Counties: Chesapeake*, Isle of Wight, Norfolk*, Portsmouth*, Suffolk* and Virginia Beach* Counties in Virginia.

*INDEPENDENT CITIES

HIGHWAY CONSTRUCTION PROJECTS (excluding tunnels, building structures in rest area projects & railroad construction; bascule, suspension & spandrel arch bridges designed for commercial navigation, bridges involving marine construction; and other major bridges).

Note: Executive Order (EO) 13658 establishes an hourly minimum wage of $10.10 for 2015 that applies to all contracts subject to the Davis-Bacon Act for which the solicitation is issued on or after January 1, 2015. If this contract is covered by the EO, the contractor must pay all workers in any classification listed on this wage determination at least $10.10 (or the applicable wage rate listed on this wage determination, if it is higher) for all hours spent performing on the contract. The EO minimum wage rate will be adjusted annually. Additional information on contractor requirements and worker protections under the EO is available at www.dol.gov/whd/govcontracts.

Modification Number	Publication Date
0	01/02/2015

SUVA2013-003 09/20/2013

	Rates	Fringes
ASBESTOS WORKER	$ 12.85	
CARPENTER (STRUCTURE)	$ 17.06	
CEMENT MASON/CONCRETE FINISHER	$ 17.82	
ELECTRICIAN	$ 24.40	
FORM SETTER	$ 15.00	
IRONWORKER, REINFORCING	$ 19.61	
IRONWORKER, STRUCTURAL	$ 28.80	
LABORER		
Asphalt Raker	$ 15.58	
Construction Laborer I (Skilled Laborer)	$ 15.57	
Construction Worker II		

(Laborer).....$ 12.48
Fence Erector.....$ 15.18
Flagger.....$ 9.00
Grade Checker.....$ 14.50
Guardrail Erector.....$ 23.00
Landscape Worker.....$ 13.20
Pipe Layer.....$ 14.83
Power Tool Operator.....$ 17.00
Sign Erector.....$ 11.50

MASON (STRUCTURE).....$ 12.50

PAINTER.....$ 21.67

PILEDRIVERMAN.....$ 13.25

PLUMBER.....$ 16.00

POWER EQUIPMENT OPERATOR:
Air Compressor Operator.....$ 15.40
Asphalt Distributor.....$ 17.57
Asphalt Paver.....$ 18.52
Backhoe.....$ 18.59
Bulldozer (Utility).....$ 16.50
Bulldozer.....$ 16.85
Cocrete Paving Machine
Operator.....$ 14.00
Concrete Finish Machine
Operator.....$ 14.00
Concrete Finish Machine
Screed Operator (Bridge)....$ 36.85
Concrete Saw Operator.....$ 16.01
Crane, Derrick, Dragline....$ 19.23
Drill Operator.....$ 15.00
Excavator (Gradall).....$ 17.54
Front End Loader.....$ 14.27
Hydro Seeder.....$ 11.00
Log Skidder Operator.....$ 15.00
Mechanic.....$ 18.00
Motor Grader (Fine Grade)...$ 16.72
Motor Grader (Rough Grade)..$ 18.40
Oiler, Greaser.....$ 14.00
Pavement Marking Operator...$ 14.00
Pavement Marking Truck
Operator.....$ 23.75
Pavement Planing Groundman..$ 16.00
Pavement Planing Operator...$ 17.56
Pile Driver Leadsman.....$ 13.25
Pile Driver.....$ 15.65
Roller (Finish).....$ 16.57
Roller (Rough).....$ 16.91
Scraper Pan.....$ 11.85
Slurry Seal Paver Machine...$ 17.00
Stabilizer Operator.....$ 16.00
Stone-Spreader.....$ 15.80
Tractor Operator (Crawlers).$ 12.37
Tractor Operator (Utility)..$ 16.15
Trenching Machine Operator..$ 14.38
Vacuum Machine Operator.....$ 13.25

SHEET METAL WORKER.....$ 18.56

TRAFFIC SIGNALIZATION:
Traffic Signal Installation.....$ 11.25

TRUCK DRIVER
Fuel & Lubricant Service
Truck Driver.....$ 11.50
Truck Driver (Multi-Rear
Axle).....$ 15.89
Truck Driver (Single Rear
Axle).....$ 13.25
Truck Driver (Tandem Rear
Axle).....$ 14.31
Truck Driver, Heavy Duty....$ 16.13

WELDER.....$ 14.00

WELDERS - Receive rate prescribed for craft performing operation to which welding is incidental.

==========

Unlisted classifications needed for work not included within the scope of the classifications listed may be added after award only as provided in the labor standards contract clauses (29CFR 5.5 (a) (1) (ii)).

The body of each wage determination lists the classification and wage rates that have been found to be prevailing for the cited type(s) of construction in the area covered by the wage determination. The classifications are listed in alphabetical order of "identifiers" that indicate whether the particular rate is a union rate (current union negotiated rate for local), a survey rate (weighted average rate) or a union average rate (weighted union average rate).

Union Rate Identifiers

A four letter classification abbreviation identifier enclosed in dotted lines beginning with characters other than "SU" or "UAVG" denotes that the union classification and rate were prevailing for that classification in the survey. Example: PLUM0198-005 07/01/2014. PLUM is an abbreviation identifier of the union which prevailed in the survey for this classification, which in this example would be Plumbers. 0198 indicates the local union number or district council number where applicable, i.e., Plumbers Local 0198. The next number, 005 in the example, is an internal number used in processing the wage determination. 07/01/2014 is the effective date of the most current negotiated rate, which in this example is July 1, 2014.

Union prevailing wage rates are updated to reflect all rate

changes in the collective bargaining agreement (CBA) governing this classification and rate.

Survey Rate Identifiers

Classifications listed under the "SU" identifier indicate that no one rate prevailed for this classification in the survey and the published rate is derived by computing a weighted average rate based on all the rates reported in the survey for that classification. As this weighted average rate includes all rates reported in the survey, it may include both union and non-union rates. Example: SULA2012-007 5/13/2014. SU indicates the rates are survey rates based on a weighted average calculation of rates and are not majority rates. LA indicates the State of Louisiana. 2012 is the year of survey on which these classifications and rates are based. The next number, 007 in the example, is an internal number used in producing the wage determination. 5/13/2014 indicates the survey completion date for the classifications and rates under that identifier.

Survey wage rates are not updated and remain in effect until a new survey is conducted.

Union Average Rate Identifiers

Classification(s) listed under the UAVG identifier indicate that no single majority rate prevailed for those classifications; however, 100% of the data reported for the classifications was union data. EXAMPLE: UAVG-OH-0010 08/29/2014. UAVG indicates that the rate is a weighted union average rate. OH indicates the state. The next number, 0010 in the example, is an internal number used in producing the wage determination. 08/29/2014 indicates the survey completion date for the classifications and rates under that identifier.

A UAVG rate will be updated once a year, usually in January of each year, to reflect a weighted average of the current negotiated/CBA rate of the union locals from which the rate is based.

WAGE DETERMINATION APPEALS PROCESS

1.) Has there been an initial decision in the matter? This can be:

* an existing published wage determination
* a survey underlying a wage determination
* a Wage and Hour Division letter setting forth a position on a wage determination matter
* a conformance (additional classification and rate) ruling

On survey related matters, initial contact, including requests for summaries of surveys, should be with the Wage and Hour Regional Office for the area in which the survey was conducted because those Regional Offices have responsibility for the Davis-Bacon survey program. If the response from this initial

contact is not satisfactory, then the process described in 2.) and 3.) should be followed.

With regard to any other matter not yet ripe for the formal process described here, initial contact should be with the Branch of Construction Wage Determinations. Write to:

Branch of Construction Wage Determinations
Wage and Hour Division
U.S. Department of Labor
200 Constitution Avenue, N.W.
Washington, DC 20210

2.) If the answer to the question in 1.) is yes, then an interested party (those affected by the action) can request review and reconsideration from the Wage and Hour Administrator (See 29 CFR Part 1.8 and 29 CFR Part 7). Write to:

Wage and Hour Administrator
U.S. Department of Labor
200 Constitution Avenue, N.W.
Washington, DC 20210

The request should be accompanied by a full statement of the interested party's position and by any information (wage payment data, project description, area practice material, etc.) that the requestor considers relevant to the issue.

3.) If the decision of the Administrator is not favorable, an interested party may appeal directly to the Administrative Review Board (formerly the Wage Appeals Board). Write to:

Administrative Review Board
U.S. Department of Labor
200 Constitution Avenue, N.W.
Washington, DC 20210

4.) All decisions by the Administrative Review Board are final.

==========

END OF GENERAL DECISION

S102CF2-0813

VIRGINIA DEPARTMENT OF TRANSPORTATION
SPECIAL PROVISION FOR
USE OF DOMESTIC MATERIAL

July 26, 2013

SECTION 102.05 PREPARATION OF BID of the Specifications is amended to include the following:

In accordance with the provisions of Section 635.410(b) of Title 23 CFR, hereinafter referred to as "Buy America", except as otherwise specified, all iron and steel products (including miscellaneous steel items such as fasteners, nuts, bolts and washers) to be permanently incorporated for use on federal aid projects shall be produced in the United States of America regardless of the percentage they exist in the manufactured product or final form they take. Therefore, "Domestically produced in the United States of America" means all manufacturing processes must occur in the United States of America, to mean, in one of the 50 States, the District of Columbia, Puerto Rico or in the territories and possessions of the United States. Manufacturing processes are defined as any process which alters or modifies the chemical content, physical size or shape or final finish of iron or steel material) such as rolling, extruding, bending, machining, fabrication, grinding, drilling, finishing, or coating whereby a raw material or a reduced iron ore material is changed, altered or transformed into a steel or iron item or product which, because of the process, is different from the original material. For the purposes of satisfying this requirement "coating" is defined as the application of epoxy, galvanizing, painting or any other such process that protects or enhances the value of the material. Materials used in the coating process need not be domestic materials.

For the purposes herein the manufacturing process is considered complete when the resultant product is ready for use as an item in the project (e.g. fencing, posts, girders, pipe, manhole covers, etc.) or is incorporated as a component of a more complex product by means of further manufacturing. Final assembly of a product may occur outside of the United States of America provided no further manufacturing process takes place.

Raw materials such as iron ore, pig iron, processed, pelletized and reduced iron ore, waste products (including scrap, that is, steel or iron no longer useful in its present form from old automobiles, machinery, pipe, railroad rail, or the like and steel trimmings from mills or product manufacturing) and other raw materials used in the production of steel and\or iron products may, however, be imported. Extracting, handling, or crushing the raw materials which are inherent to the transporting the materials for later use in the manufacturing process are exempt from Buy America. The use of foreign source steel or iron billet is not acceptable under the provisions of Buy America. For the purposes of this provision all steel or iron material not meeting the criteria as domestically produced in the United States of America will be considered as "foreign" material. All iron and steel items will be classified hereinafter as "domestic" or "foreign", identified by and subject to the provisions herein.

Domestically produced iron or steel ingots or billets shipped outside the United States of America for any manufacturing process and returned for permanent use in a project would not comply with "Buy America" requirements.

Buy America provisions do not apply to iron or steel products used temporarily in the construction of a project such as temporary sheet piling, temporary bridges, steel scaffolding, falsework or such temporary material or product or material that remains in place for the Contractor's convenience.

Section 635.410(b) of Title 23 CFR permits a minimal amount of steel or iron material to be incorporated in the permanent work on a federal-aid contract. The cost of such materials or products

must not exceed one-tenth of one percent of the contract amount or $2500, whichever is greater. The cost of the foreign iron or steel material is defined as its monetary value delivered to the job site and supported by invoices or bill of sale to the Contractor. This delivered to site cost must include transportation, assembly, installation and testing.

In the event the total cost of all "foreign" iron and steel product or material does not exceed one-tenth of one percent of the total contract cost or $2,500, whichever is greater, the use of such material meeting the limitations herein will not be restricted by the domestic requirements herein. However, by signing the bid, the Bidder certifies that such cost does not exceed the limits established herein.

Waivers:

With prior concurrence from Federal Highway Administration (FHWA) headquarters, the Federal Highway Division Administrator may grant a waiver to specific projects provided it can be demonstrated:

1 that the use of domestic steel or iron materials would be inconsistent with the public interest; or

2. materials or products requested for use are not produced in the United States in sufficient or reasonably available quantities and are of satisfactory quality for use in the permanent work.

The waiver request shall be submitted with supportive information to include:

1. Project number\description, project cost, waiver item, item cost, country of origin for the product, reason for the waiver, and

2. Analysis of redesign of the project using alternative or approved equal domestic products

In order to grant such a waiver the request for the waiver must be published in the Federal Register for a period not less than 15 days or greater than 60 days prior to waiving such requirement. An initial 15 day comment period to the waiver will be available to the public by means of the FHWA website: http://www.fhwa.dot.gov/construction/contracts/waivers.cfm. Following that initial 15 day period of review and comment the request for waiver will be published by the FHWA in the Federal Register. The effective date of the FHWA finding, either to approve or deny the waiver request, will be 15 days following publication in the Federal Register.

Only the FHWA Administrator may grant nationwide waivers which still are subject to the public rulemaking and review process.

Alternative Bidding Procedures:

An alternative bidding procedure may be employed to justify the use of foreign iron and\or steel. To qualify under this procedure the total project is bid using two alternatives, one based on the use of domestic products and the other, the use of corresponding foreign source steel and\or iron materials.

In accordance with the provisions of Section 103.02 the Contract will be awarded to the lowest responsive and responsible bidder who submits the lowest total bid based on furnishing domestic iron or steel unless such total exceeds the lowest total bid based on furnishing foreign iron and\or steel by more than 25 percent, in which case the award will be made to the lowest responsive and responsible bidder furnishing foreign iron and\or steel based upon furnishing verifiable supportive data. The bidder shall submit a bid based on permanently incorporating only domestic iron and\or steel in the construction of the project. The bidder may also submit a bid for the same proposed contract based on being allowed to permanently incorporate corresponding foreign iron and\or steel materials

meeting the other contract requirements into the work on the contract. If he chooses to submit such a bid, that alternate bid shall clearly indicate which foreign iron and\or steel items will be permanently installed in the work as well as contain prices for all other items listed in the corresponding domestic proposal to complete a total “Foreign” bid.

In the event the contract is awarded to the bidder furnishing foreign iron and\or steel materials or items the provision for price adjustment of steel items will be permitted, however, price fluctuations shall use the U.S. index as stated in the Special Provision for Price Adjustment For Steel. The Contractor must indicate which corresponding eligible steel items he chooses price adjustment to apply. In the event the contract is awarded to a bidder furnishing foreign iron and\or steel items and during the life of that contract the Contractor discovers he can not furnish foreign iron and\or steel material as originally anticipated and agreed upon, he shall be responsible to honor the total bid price and furnish such iron and\or steel materials meeting the contract requirements from other sources as necessary to complete the work.

In the event the Contractor proposes to furnish "foreign" iron and steel and can verify a savings in excess of 25 percent of the overall project cost if bid using domestic materials, the Contractor shall submit a second complete paper bid proposal clearly marked “Foreign” including Form C-7 and supportive data supplement on all sheets. Supportive data shall list, but not be limited to, origin of material, best price offer, quantity and complete description of material, mill analysis, evidence or certification of conformance to contract requirements, etc. The “Foreign” bid shall be completed using the best price offer for each corresponding bid item supplying foreign material in the alternative bid and submit the same with the Contractor’s “Domestic” bid. The Contractor shall write the word “Foreign” by the bid total shown on Form C-7 as well as last page of Schedule of Items showing the total bid amount. The bidder shall also contact the State Contract Engineer to inform him that he is also submitting an alternate “Foreign” paper bid..

The information listed on the supportive data sheet(s) will be used to provide the basis for verification of the required cost savings. In the event comparison of the prices given, or corrected as provided in Section 103.01 of the Specifications, shows that use of "foreign" iron and steel items does not represent a cost savings exceeding the aforementioned 25 percent, "domestic" iron and\or steel and prices given there for shall be used and the "100 percent Domestic Items Total" shall be the Contractor's bid.

Certification of Compliance:

Where domestic material is supplied, prior to incorporation into the Work, the Contractor shall furnish to the Department a certificate of compliance (such as may be furnished by steel mill test reports) that all steel and\or iron products supplied to the project except as may be permitted (one-tenth of one percent of the total contract cost or $2,500, whichever is greater) and permanently incorporated into the work satisfies the domestic requirements herein. This certification shall contain a definitive statement about the origin of all products covered under the provisions of Buy America as stated herein.

In lieu of the Contractor providing personal certification, the Contractor may furnish a stepped certification in which each handler of the product, such as supplier, fabricator, manufacturer, processor, etc. furnishes an individual certification that their step in the process was domestically performed.

VDOT
SPECIAL
PROVISIONS

FOR

CONSTRUCTION

(**c100ll2**-0112) **VDOT SUPPLEMENTAL SPECIFICATIONS (SSs), SPECIAL PROVISIONS (SPs) AND SPECIAL PROVISION COPIED NOTES (SPCNs)**

Where Virginia Department of Transportation (VDOT) Supplemental Specifications, Special Provisions and Special Provision Copied Notes are used in this contract, the references therein to "the Specifications" shall refer to the *Virginia Department of Transportation Road and Bridge Specifications*, dated 2007 for both imperial and metric unit projects. References to the "Road and Bridge Standard(s)" shall refer to the *Virginia Department of Transportation Road and Bridge Standards*, dated 2008 for both imperial and metric unit projects. References to the "Virginia Work Area Protection Manual" shall refer to the 2011 edition of the *Virginia Work Area Protection Manual* for imperial and metric unit projects. References to the "MUTCD" shall refer to the 2009 edition of the *MUTCD* and the current *Virginia Supplement to the MUTCD* for imperial and metric unit projects.

Where the terms "Department", "Engineer" and "Contract Engineer" appear in VDOT Supplemental Specifications, Special Provisions and Special Provision Copied Notes used in this contract and the VDOT publication(s) that each references, the authority identified shall be in accordance with the definitions in Section 101.02 of the *Virginia Department of Transportation Road and Bridge Specifications*, dated 2007. Authority identified otherwise for this particular project will be stated elsewhere in this contract.

VDOT Supplemental Specifications, Special Provisions and Special Provision Copied Notes used in this contract and the VDOT publication(s) that each reference are intended to be complementary to the each other. In case of a discrepancy, the order of priority stated in Section 105.12 of the *Virginia Department of Transportation Road and Bridge Specifications*, dated 2007 shall apply.

VDOT Special Provision Copied Notes in this contract are designated with "(SPCN)" after the date of each document. VDOT Supplemental Specifications and Special Provision Copied Notes in this contract are designated as such above the title of each document.

The information enclosed in parenthesis "( )" at the left of each VDOT Special Provision Copied Note in this contract is file reference information for VDOT use only. The information in the upper left corner above the title of each VDOT Supplemental Specification and VDOT Special Provision in this contract is file reference information for VDOT use only.

The system of measurement to be used in this project is stated elsewhere in this contract. VDOT Supplemental Specifications, Special Provisions and Special Provision Copied Notes containing imperial units of measure with accompanying expressions in metric units shall be referred to hereinafter as "dual unit measurement" documents. Such a "dual unit measurement" is typically expressed first in the imperial unit followed immediately to the right by the metric unit in parenthesis "( )" or brackets "[ ]" where parenthesis is used in the sentence to convey other information. Where a "dual unit measurement" appears in VDOT documents, the unit that applies shall be in accordance with the system of measurement as stated elsewhere in this contract. The unit shown that is <u>not</u> of the declared unit of measurement is not to be considered interchangeable and mathematically convertible to the declared unit and shall not be used as an alternate or conflicting measurement. Where VDOT Specifications are used for metric unit projects and only imperial units of measurement appear the document, the provision(s) in this contract for imperial unit to metric unit conversion shall apply.

12-1-11 (SPCN)

(**c103i01**-0814) **SECTION 103—AWARD AND EXECUTION OF CONTRACTS** of the Specifications is amended as follows:

Section 103.09—Execution of Contract is amended to include the following:

According to Section 2.2-4308.2 of the ***Code of Virginia***, any employer with more than an average of 50 employees for the previous 12 months entering into a contract in excess of $50,000 with the Department to provide work or provide services pursuant to such contract shall register and participate in the U.S. Department of Homeland Security's "E-Verify" system to verify information and work authorization of its newly hired employees performing work pursuant to such contract.

Contractors are not required to be enrolled with "E-Verify" at the time bids are submitted, however, prior to award, the lowest responsive and responsible bidder must be enrolled with "E-Verify". Contractors may use the following website to enroll in "E-Verify", http://www.uscis.gov/e-verify.

8-8-14 (SPCN)

The following provisions during construction are additional requirements on this VDOT Locally Administered Project and contractor shall conform and comply as follows:

1. Contractor shall have two Bulletin Boards with Federal-aid notice, Wage Rate Information, *Non-Discrimination Notice Form C60*, EEO poster at the job site (in job trailer, if applicable) and in contractor's office. Copies of these notices/posters are included in these provisions.

2. Certified Payrolls are due weekly by prime and subcontractors to City. City is required to submit payrolls to VDOT on a monthly basis with invoice, along with *Statement of Compliance Form C-28.* City will not pay contractor invoice until all required VDOT and Federal Forms have been completed accurately and approved by VDOT. Inability of contractor to complete and submit accurate VDOT and/or State forms will result in delayed or nonpayment of invoices. Payroll submission shall be from Contractor to City-assigned inspector. *Statement of Compliance Form C56* shall be included in Contractor submission. Copy of Form C-56 is included in these provisions.

3. *BASIC HOURLY RATES PAID BY CONTRACTOR Form C-28* must be submitted to City-assigned construction inspector within 60 days of the start of contract (prior to the approval of the second estimate) and then every 90 days thereafter. C-28 form includes prime and subcontractors employee hourly rates. Contractor representative and City-assigned inspector must sign C-28 before C-28 is submitted to VDOT. Contractor shall provide completed C-28 form to City-assigned inspector for review/signature. Copy of Form C-28 is included in these provisions.

4. *Construction Directive Memorandum CD-2005-1* identifies procedures the City of Norfolk will implement during this contract regarding Guidelines for Labor Compliance on Davis Bacon/Federal-Aid Construction Projects.

5. *CONTRACTOR/SUBCONTRACTOR EQUAL EMPLOYMENT OPPORTUNITY INFORMATION REQUEST Form C64* must be completed, signed, and submitted to City-assigned construction inspector within 15 days of NTP and then every 180 days thereafter. Copy of Form C-64 is included in these provisions.

6. *CONTRACTOR'S PROGRESS SCHEDULE FOR CONSTRUCTION PROJECTS Form C-13* or City-approved equivalent progress schedule shall be completed and submitted monthly to City-assigned inspector prior to approval of pay invoice. Copy of Form C-13 is included in these provisions.

7. *Monthly EEO Report C57* shall be completed, signed, submitted by contractor to City-assigned inspector each month for the first three months of work and then submit each July for the duration of the project. Report C57 should be submitted

to the city-assigned inspector by the prime contractor. The prime contractor should include in his/her Report C57 prime and subcontractor employment data. The prime should be requiring each subcontractor to provide him/her with the necessary information so that the prime can adequately complete the C57 report being submitted to the City. The staffing figures to be reported under employment data must represent the project work force on board in whole or in part for the last payroll period preceding the end of the month. The staffing figures to be reported on C57 must include journey-level men and women, apprentices, and on the job trainees as indicated. Copy of Report C57 is included in these provisions.

8. Within 15 days of NTP, Contractor shall provide City-assigned inspector a Letter addressed to City stating name, title, address, and phone number of EEO Officer.

9. Within 15 days of NTP and every 6 months thereafter, Contractor shall provide City-assigned inspector EEO Meeting Minutes.

10. *Subletting Request Form C-31* shall be submitted on any Subletting under this contract. All creditable DBE participation must either be performed under an official subcontract executed between Prime and DBE or if 1st tier sub is utilizing DBEs, there be a three-party agreement executed between Prime, 1st tier sub, and DBE. (Exceptions: hauling only and supplier/vendors). Copy of C-31 is included in these provisions.

11. *Construction Directive Memorandum CD-2008-12 identifies procedures the City of Norfolk will implement during this contract regarding Approval of Sublet Requests.*

12. *DBE AND SWAM PAYMENT COMPLIANCE REPORT C-63* shall be completed and submitted by Contractor to City-assigned inspector on a quarterly basis and in accordance with instructions identified on the report. On Federally funded project nearing completion, the Contractor shall submit Form C-63 marked Semi-Final within 20 days of the submission of the last regular estimate. This will be accompanied by a letter of certification, signed by the prime Contractor and appropriate DBE, indicating the amount, including any retainage, which remains to be paid. Within 30 days of the payment of the final estimate on Federal projects, the Contractor shall submit Form C-63 marked Final. The Final Form C-63 will be compared with the Semi-Final submission to ensure that prompt and proper payment has been made to the DBE-subcontractors, and to make certain that the Contractor has fully complied with the requirements of the Special Provision for Section 110.04 of the Specifications. Copy of Report C-63 is included in these provisions.

13. DBE Reviews may be conducted on DBE Firms throughout contract duration by VDOT Compliance Officer.

14. *Construction Directive Memorandum CD-2007-5* identifies procedures the City of Norfolk will implement during this contract regarding DBE Goals and SWAM Potential Achievements.

15. Contractor shall work diligently with City-assigned inspector to complete all VDOT-required forms. Signatures by both Contractor and City-assigned inspector are required on applicable VDOT-documentation prior to submitting to VDOT for review/approval of monthly invoices. Contractor shall work directly with City-assigned inspector for completion of VDOT-required forms/reports.

16. Due to federal funding associated with this project, contractor must adhere to time of completion specified in contract documents. Liquidated damages will be strongly enforced.

17. City of Norfolk reimbursement by VDOT will not occur until all VDOT-required forms are completed accurately. Therefore, inability of contractor to provide adequate/accurate VDOT-required forms/paperwork will result in a delay of Contractor's payment.

18. Electronic copy of VDOT forms can be found at http://vdotforms.vdot.virginia.gov/

19. These VDOT SPECIAL PROVISIONS FOR CONSTRUCTION are in addition to any other special provisions within these contract documents.

NOTICE

The highway construction underway at this location is a Federal or Federal-aid project and is subject to applicable State and Federal laws, including Title 18, United States Code, Section 1020, which reads as follows:

"Whoever, being an officer, agent, or employee of the United States, or of any State or territory, or whoever, whether a person, association, firm, or corporation, knowingly makes any false statement, false representation, or false report as to the character, quality, quantity, or cost of the material used or to be used, or the quantity or quality of the work performed or to be performed, or the costs thereof in connection with the submission of plans, maps, specifications, contracts, or costs of construction of any highway or related project submitted for approval to the Secretary of Transportation; or

"Whoever knowingly makes any false statement, false representation, false report, or false claim with respect to the character, quality, quantity, or cost of any work performed or to be performed, or materials furnished or to be furnished, in connection with the construction of any highway or related project approved by the Secretary of Transportation; or

"Whoever knowingly makes any false statement or false representation as to a material fact in any statement, certificate, or report submitted pursuant to the provisions of the Federal-Aid Road Act approved July 1, 1916 (39 Stat. 355), as amended and supplemented,

"Shall be fined not more than $10,000 or imprisoned not more than five years, or both."

Any person having reason to believe this statute is being violated should report the same to the agency representative(s) named below.

(Federal-Aid projects only)

STATE HIGHWAY DEPARTMENT
Malcolm T. Kerley, P.E.
Chief Engineer
1401 E. Broad Street
Richmond, VA 23219

(Both Federal and Federal-Aid projects)

FEDERAL HIGHWAY ADMINISTRATION

Irene Rico
Division Administrator
400 N. 8th Street, Suite 750
Richmond, VA 23219

Form C-59
Rev. 10-1-98

U.S. DEPARTMENT
OF LABOR

IMPORTANT

U. S. DEPARTMENT
OF TRANSPORTATION

WAGE RATE INFORMATION
FEDERAL-AID HIGHWAY PROJECT

Construction work on this project is subject to the minimum wage rate provisions of Section 113, Title 23, United States Code and the overtime wage provisions of the Contract Work Hours and Safety Standards Act.

As an employee of the contractor or a subcontractor, you are entitled to be paid not less than the hourly rate for the particular classification of work performed as set forth in the schedule affixed below.

The schedule affixed below contains no minimum change wage rates for the following employees:

1. Apprentices properly registered under approved Federal or State apprenticeship programs. Each approved program contains the applicable rates.

2. Persons employed pursuant to apprenticeship and skill training programs which nave been certified by the Secretary of Transportation as promoting equal employment opportunity in connection with Federal-aid highway construction programs. Programs thus certified will set forth the rates applicable.

Call any failure to receive the required rates to the attention of the representative of the contracting agency shown below or the nearest representative of the Federal Highway Administration.

(COMMONWEALTH OF VIRGINIA, Department of Transportation representative)

Additional information may be obtained from the Federal Highway Administration, Washington, D.C. 20590

Any communication should list the name, location, and type of project, the name of the contractor and his address, and a statement of what you do, what rate you are paid, and what rate you think you should be paid.

NOTICE!

NON-DISCRIMINATION

The highway construction underway at this location is a Federal-aid project and is subject to applicable State and Federal laws, including Executive Order 11,246, dated Sept. 24, 1965 which reads as follows:

"(1) The contractor will not discriminate against any employee or applicant for employment because of race, creed, color, or national origin. Such action shall include, but not be limited, to the following: employment upgrading, demotion or transfer; recruitment or recruitment advertising; layoff or termination; rates of pay or other forms of compensation; and selection for training, including apprenticeship. The contractor agrees to post in conspicuous places, available to employees and applicants for employment, notices to be provided by the contracting officer setting for the provisions of this nondiscrimination clause.

"(2) The contractor will, in all solicitations or advertisements for employees placed by or on behalf of the contractor, state all qualified applicants will receive consideration for employment without regard to race, creed, color, or national origin.

"(3) The contractor will send to each labor union or representative of workers with which he has a collective bargaining agreement or other contract or understanding, a notice, to be provided by the agency contracting officer, advising the labor union or workers' representative of the contractors commitments under Section 202 of Executive Order No.11246 of September 24, 1965 and shall post copies of the notice in conspicuous places available to employees and applicants for employment.

"(4) The contractor will comply will all provisions of Executive Order 11246 of September 24, 1965 and of the rules, regulations and relevant orders of the Secretary of Labor.

"(5) The contractor will furnish all information and reports required by Executive Order 11246 of September 24, 1965, and by the rules, regulations, and orders of the Secretary of Labor, or pursuant thereto, and will permit access to his books, records, and accounts by the contracting agency and the Secretary of Labor for purposes of investigation to ascertain compliance with such rules, regulations, and orders.

"(6) In the event of the contractor's noncompliance with the nondiscrimination clause of this contract or with any such rules, regulations, or orders, this contract may be cancelled, terminated, or suspended in whole or in part and the contractor may be declared ineligible for further Government contracts in accordance with procedures authorized in Executive Order No. 11246 of September 24, 1965, and such other sanctions may be imposed and remedies involved as provided in Executive Order No. 11246 of September 24, 1965, or by rule, regulation, or order of the Secretary of Labor, or as otherwise provided by law.

"(7) The contractor will include the provisions of paragraphs (1) through(7) in every subcontract or purchase order unless exempted by rules, regulations, or orders of the Secretary of Labor issued pursuant to Section 204 of Executive Order No. 11246 of September 24, 1965, so that such provisions will be binding upon each subcontractor or vendor. The contractor will take such action with respect to any subcontract or purchase order as the contracting agency may direct as a means of enforcing such provisions, including sanctions for noncompliance: PROVIDED, HOWEVER, that in the event of the contractor becomes involved in, or is threatened with, litigation with a subcontract or vendor as a result of such direction by the contracting agency, the contractor may request the United States to enter into such litigation to protect the interests of the United States.

ANY PERSON HAVING REASON TO BELIEVE THIS STATUE IS BEING VIOLATED SHOULD REPORT THE SAME TO BOTH THE VIRGINIA DEPARTMENT OF TRANSPORTATION AND THE FEDERAL HIGHWAY ADMINISTRATION.

COMMONWEALTH OF VIRGINIA
DEPARTMENT OF TRANSPORTATION
DEPARTMENT OF EQUAL OPORTUNITY
MANAGER
EEO DIVISION
1401 East Broad Street
RICHMOND, VIRGINIA 23219

FEDERAL HIGHWAY ADMINISTRATION
U.S. DEPARTMENT OF TRANSPORTATION

FEDERAL OFFICE BUILDING
4000 North 8th Street
RICHMOND, VIRGINIA

Equal Employment Opportunity is

THE LAW

Employers Holding Federal Contracts or Subcontracts

Applicants to and employees of companies with a Federal government contract or subcontract are protected under the following Federal authorities:

RACE, COLOR, RELIGION, SEX, NATIONAL ORIGIN

Executive Order 11246, as amended, prohibits job discrimination on the basis of race, color, religion, sex or national origin, and requires affirmative action to ensure equality of opportunity in all aspects of employment.

INDIVIDUALS WITH DISABILITIES

Section 503 of the Rehabilitation Act of 1973, as amended, prohibits job discrimination because of disability and requires affirmative action to employ and advance in employment qualified individuals with disabilities who, with reasonable accommodation, can perform the essential functions of a job.

VIETNAM ERA, SPECIAL DISABLED, RECENTLY SEPARATED, AND OTHER PROTECTED VETERANS

38 U.S.C. 4212 of the Vietnam Era Veterans' Readjustment Assistance Act of 1974, as amended, prohibits job discrimination and requires affirmative action to employ and advance in employment qualified Vietnam era veterans, qualified special disabled veterans, recently separarted veterans, and other protected veterans.

Any person who believes a contractor has violated its nondiscrimination or affirmative action obligations under the authorities above should contact immediately:

The Office of Federal Contract Compliance Programs (OFCCP), Employment Standards Administration, U.S. Department of Labor, 200 Constitution Avenue, N.W., Washington, D.C. 20210 or call (202) 693-0101, or an OFCCP regional or district office, listed in most telephone directories under U.S. Government, Department of Labor.

Private Employment, State and Local Governments, Educational Institutions

Applicants to and employees of most private employers, state and local governments, educational institutions, employment agencies and labor organizations are protected under the following Federal laws:

RACE, COLOR, RELIGION, SEX, NATIONAL ORIGIN

Title VII of the Civil Rights Act of 1964, as amended, prohibits discrimination in hiring, promotion, discharge, pay, fringe benefits, job training, classification, referral, and other aspects of employment, on the basis of race, color, religion, sex or national origin.

DISABILITY

The Americans with Disabilities Act of 1990, as amended, protects qualified applicants and employees with disabilities from discrimination in hiring, promotion, discharge, pay, job training, fringe benefits, classification, referral, and other aspects of employment on the basis of disability. The law also requires that covered entities provide qualified applicants and employees with disabilities with reasonable accommodations that do not impose undue hardship.

AGE

The Age Discrimination in Employment Act of 1967, as amended, protects applicants and employees 40 years of age or older from discrimination on the basis of age in hiring, promotion, discharge, compensation, terms, conditions or privileges of employment.

SEX (WAGES)

In addition to sex discrimination prohibited by Title VII of the Civil Rights Act of 1964, as amended (see above), the Equal Pay Act of 1963, as amended, prohibits sex discrimination in payment of wages to women and men performing substantially equal work in the same establishment.

Retaliation against a person who files a charge of discrimination, participates in an investigation, or opposes an unlawful employment practice is prohibited by all of these Federal laws.

If you believe that you have been discriminated against under any of the above laws, you should contact immediately:

The U.S. Equal Employment Opportunity Commission (EEOC), 1801 L Street, N.W., Washington, D.C. 20507 or an EEOC field office by calling toll free (800) 669-4000. For individuals with hearing impairments, EEOC's toll free TDD number is (800) 669-6820.

Programs or Activities Receiving Federal Financial Assistance

RACE, COLOR, RELIGION, NATIONAL ORIGIN, SEX

In addition to the protection of Title VII of the Civil Rights Act of 1964, as amended, Title VI of the Civil Rights Act prohibits discrimination on the basis of race, color or national origin in programs or activities receiving Federal financial assistance. Employment discrimination is covered by Title VI if the primary objective of the financial assistance is provision of employment, or where employment discrimination causes or may cause discrimination in providing services under such programs. Title IX of the Education Amendments of 1972 prohibits employment discrimination on the basis of sex in educational programs or activities which receive Federal assistance.

INDIVIDUALS WITH DISABILITIES

Sections 501, 504 and 505 of the Rehabilitation Act of 1973, as amended, prohibits employment discrimination on the basis of disability in any program or activity which receives Federal financial assistance in the federal government. Discrimination is prohibited in all aspects of employment against persons with disabilities who, with reasonable accommodation, can perform the essential functions of a job.

If you believe you have been discriminated against in a program of any institution which receives Federal assistance, you should contact immediately the Federal agency providing such assistance.

PERSONNEL REQUIREMENTS FOR WORK ZONE TRAFFIC CONTROL - Section 105 and 512 of the Specifications are amended as follows:

Section 105.14—Maintenance During Construction is amended to add the following:

The Contractor shall provide at least one person on the project site during all work operations who is currently verified either by the Department in Intermediate Work Zone Traffic Control, or by the American Traffic Safety Services Association (ATSSA) as a Traffic Control Supervisor (TCS). This person must have the verification card with them while on the project site. This person shall be responsible for the oversight of work zone traffic control within the project limits in compliance with the contract requirements involving the plans, specifications, the VWAPM, and the MUTCD. This person's duties shall include the supervision of the installation, adjustment (if necessary), inspection, maintenance and removal when no longer required of all traffic control devices on the project.

If none of the Contractor's on-site personnel responsible for the supervision of such work has the required verification with them or if they have an outdated verification card showing they are not currently verified either by the Department in Intermediate Work Zone Traffic Control, or by the American Traffic Safety Services Association (ATSSA) as a Traffic Control Supervisor (TCS) all work on the project will be suspended by the Engineer.

The Contractor shall provide at least one person on site who is, at a minimum, verified by the Department in Basic Work Zone Traffic Control for each construction and\or maintenance operation that involves installing, maintaining, or removing work zone traffic control devices. This person shall be responsible for the placement, maintenance and removal of work zone traffic control devices.

In the event none of the Contractor's on-site personnel of any construction/maintenance operation has, at a minimum, the required verification by the Department in Basic Work Zone Traffic Control, that construction/maintenance operation will be suspended by the Engineer until that operation is appropriately staffed in accordance with the requirements herein.

Section 512.03 Procedures is amended to add (r) **Work Zone Traffic Control** as the following:

(r) **Work Zone Traffic Control**: The Contractor shall provide individuals trained in Work Zone Traffic Control in accordance with the requirements of Section 105.14 of the Specifications.

Section 512.04 Measurement and Payment is amended to add the following:

Basic Work Zone Traffic Control – Separate payment will not be made for providing a person to meet the requirements of Section 105.14 of the Specifications. The cost thereof shall be included in the price of other appropriate pay items.

Intermediate Work Zone Traffic Control - Separate payment will not be made for providing a person to meet the requirements of Section 105.14 of the Specifications. The cost thereof shall be included in the price of other appropriate pay items.

6-11-09a (SPCN)

(**c105hf1**-0309) **SECTION 105.06 SUBCONTRACTING** of the Specifications is amended to include the following:

Any distribution of work shall be evidenced by a written binding agreement on file at the project site. Where no field office exists, such agreement shall be readily available upon request to Department inspector(s) assigned to the project.

The provisions contained in Form FHWA-1273 specifically, and other federal provisions included with the prime Contract are generally applicable to all Federal-aid construction projects and must be made a part of, and physically incorporated into all contracts, as well as, appropriate subcontracts for work so as to be binding in those agreements.

12-19-08 (SPCN)

Form C-56
Rev.4-18-99

U.S. DEPARTMENTOF
LABOR
Wage and Hour and Public
Contracts Division

COMMONWEALTH OF VIRGINIA
DEPARTMENT OF TRANSPORTATION
STATEMENT OF COMPLIANCE

Form Approved
Budget Bureau No. 44-R1093

Date _____

I, _____ _____ do hereby state:
(Name of signatory party) (Title)

(I) That I pay or supervise the payment of the persons employed by _____ on
(Contractor or subcontractor)

the _____ ; that during the payroll period commencing on the _____ day of _____
(Building or work)

20 ____ and ending the ____ day of ____ , 20 ___ , all persons employed on said project have been paid the full weekly wages earned, that no rebates have been or will be made directly or indirectly to or on behalf of said _____ _____ from the full weekly wages earned by any person and that no deductions have been made
(Contractor or Subcontractor)

either directly or indirectly from the full wages earned by any person, other than permissible deductions as defined in Regulations, Part 3 (29 CFR Subtitle A), issued by the Secretary of Labor under the Copeland Act as amended (48 Stat. 948.63 Stat. 108, 72 Stat.967; 76 Stat. 357; 40 USC. 276c), and described below:

_____

_____

_____

_____

(2) That any payrolls otherwise under this contract required to be submitted for the above period are correct and complete: that the wage rates for laborers or mechanics contained therein are not less than the applicable wage rates contained in any wage determination incorporated into the contract; that the classifications set forth therein for each laborer or mechanic conform with the wok he performed.

(3) That any apprentices employed in the above period are duly registered in a bona fide apprenticeship program registered with a State apprenticeship agency recognized by the Bureau of Apprenticeship and Training, United States Department of Labor, or if no such recognized agency exists in a State, are registered with the Bureau of Apprenticeship and Training, United States Department of Labor.

(4) That:

(a) WHERE FRINGE BENEFITS ARE PAID TO APPROVED PLANS, FUNDS, OR PROGRAMS

In addition to the basic hourly wage rates paid to each laborer or mechanic listed in the above referenced payroll, payments of fringe benefits as listed in the contract have been or will be made to appropriate programs for the benefit of such employees, except as noted in Section 4(c) below.

or

(b) WHERE FRINGE BENEFITS ARE PAID IN CASH

Each Laborer or mechanic listed in the above referenced payroll has been paid as indicated on the payroll, an amount not less than the sum of the applicable basic hourly wage rate plus the amount of the required fringe benefits as listed in the contract, except as noted in section 4(c) below.

(c) EXCEPTIONS

EXCEPTION (CRAFT)	EXPLANATION
Remarks	

Name and Title	Signature
The willful falsification of any of the above statements may subject the contractor or subcontractor to civil or criminal prosecution. See Section 1001 of Title 18 and Section 231 of Title 31 of the United States code.	

INSTRUCTIONS FOR PREPARATION OF STATEMENT OF COMPLIANCE

This statement of compliance meets needs resulting from the amendment of the Davis-Bacon Act to include fringe benefits provisions. Under this amended law, the contractor is required to pay fringe benefits as predetermined by the Department of Labor, in addition to payment to the minimum rates. The contractor's obligation to pay fringe benefits may be met by payment of the fringes to the various plans, funds, or programs or by making these payments to the employees as cash in lieu of fringes.

The contractor should show on the face of his payroll all monies paid to the employees whether as basic rates or as cash in lieu of fringes. The contractor shall represent in the statement of compliance that he is paying to others fringes required by the contract and not paid as cash in lieu of fringes. Detailed instructions follow:

Contractors who pay all required fringe benefits:

A contractor who pays fringe benefits to approved plans, funds, or programs in amounts not less than were determined in the applicable wage decision of the Secretary of Labor shall continue to show on the face of his payroll the basic cash hourly rate and overtime rate paid to his employees, just as he has always done. Such a contractor shall check paragraph 4(a) of the statement to indicate that he is also paying to approved plans, funds, or programs not less than the amount pre-determined as fringe benefits for each craft. Any exception shall be noted in Section 4(c).

Contractors who pay no fringe benefits:

A contractor who pays no fringe benefits shall pay to the employee and insert in the straight time hourly rate column of his payroll an amount not less than the predetermined rate for each classification plus the amount of fringe benefits determined for each classification in the applicable wage decision. Inasmuch as it is not necessary to pay time and a half on cash paid in lieu of fringes, the overtime rate shall not be less than the sum of the basic predetermined rate, plus the half time premium on the basic or regular rate plus the required cash in lieu of fringes at the straighttime rate. To simplify computation of overtime, it is suggested that the straight time basic rate and cash in lieu of fringes be separately stated in the hourly rate column, thus $3.25/.40. In addition, the contractor shall check paragraph 4(b) of the statement to indicated that he is paying fringe benefits in cash directly to his employees. Any exceptions shall be noted in Section 4(c).

Use of Section 4(c), Exceptions

Any contractor who is making payment to approved plans, funds, or programs in amounts less than the wage determination requires is obliged to pay the deficiency directly to the employees as cash in lieu of fringes. Any exceptions to Section 4(a) or 4(b), whichever the contractor may check, shall be entered in Section 4(c). Enter in the Exception column the craft, and enter in the Explanation column the hourly amount paid the employees as cash in lieu of fringes, and the hourly amount paid to plans, funds or programs as fringes.

Form C-28
Rev. 2-6-03

COMMONWEALTH OF VIRGINIA
DEPARTMENT OF TRANSPORTATION
BASIC HOURLY RATES PAID BY CONTRACTOR

Contractor: _____ Vendor No.: _____

Project No.: _____ CONTID. No.: _____

FHWA No.: _____ County/City of _____

Decision No.: _____

Report Period Ending Date: _____

List number of employees in each classification and basic hourly wage rates paid. DO NOT INCLUDE FRINGE BENEFITS. Do not show overtime rates. Include employees of all sub contractors.

23-26	(Computer Code)	27-28	30-33	34-36	37-40	41-43	44-47	48-50	51-54	55-57	58-61
0110	Asbestos Worker	@	@	@	@	@	@	@	@	@	@
0100	Asphalt Raker	@	@	@	@	@	@	@	@	@	@
2400	Blaster	@	@	@	@	@	@	@	@	@	@
0200	Carpenter, Structure	@	@	@	@	@	@	@	@	@	@
0300	Carpenter, Structure Helper	@	@	@	@	@	@	@	@	@	@
0400	Concrete Finisher	@	@	@	@	@	@	@	@	@	@
0500	Concrete, Finisher Helper	@	@	@	@	@	@	@	@	@	@
1510	Construction Worker I (Skilled Laborer)	@	@	@	@	@	@	@	@	@	@
1500	Construction Worker II (Laborer)	@	@	@	@	@	@	@	@	@	@
0550	Deckhand	@	@	@	@	@	@	@	@	@	@
0600	Electrician	@	@	@	@	@	@	@	@	@	@
0625	Electrician Helper	@	@	@	@	@	@	@	@	@	@
0800	Flaggers	@	@	@	@	@	@	@	@	@	@
1000	Fence Erector	@	@	@	@	@	@	@	@	@	@
0900	Form Setter	@	@	@	@	@	@	@	@	@	@
7200	Grade Checker	@	@	@	@	@	@	@	@	@	@
1010	Guardrail Erector	@	@	@	@	@	@	@	@	@	@
1600	Landscape Worker	@	@	@	@	@	@	@	@	@	@
1700	Mason, Structure	@	@	@	@	@	@	@	@	@	@
1800	Mechanic	@	@	@	@	@	@	@	@	@	@
4500	Oiler, Greaser	@	@	@	@	@	@	@	@	@	@

COMMONWEALTH OF VIRGINIA
DEPARTMENT OF TRANSPORTATION
BASIC HOURLY RATES PAID BY CONTRACTOR

Project No.: _____ Contractor: _____

23-26	(Computer Code)	27-28		30-33	34-36		37-40	41-43		44-47	48-50		51-54	55-57		58-61
2000	Painter		@			@			@			@			@	
2100	Painter, Helper		@			@			@			@			@	
2200	Pile Driver, Leadsman		@			@			@			@			@	
2300	Pipe Layer		@			@			@			@			@	
2310	Plumber		@			@			@			@			@	
2320	Plumber, Helper		@			@			@			@			@	
1100	Reinforcing Metal Worker		@			@			@			@			@	
1200	Reinforcing Metal Worker Helper		@			@			@			@			@	
2550	Sheet Metal Worker		@			@			@			@			@	
2500	Sign Erector		@			@			@			@			@	
1300	Structural Worker		@			@			@			@			@	
1400	Structural Worker Helper		@			@			@			@			@	
8000	Traffic Signal Installer/ Maintenance		@			@			@			@			@	
8010	Traffic Signal Installer/ Maintenance Helper		@			@			@			@			@	
0425	Waterproofer		@			@			@			@			@	
6600	Welder		@			@			@			@			@	
6610	Welder, Certified		@			@			@			@			@	
2700	Air Compressor Operator		@			@			@			@			@	
2800	Asphalt Distributor Operator		@			@			@			@			@	
2900	Asphalt Paver Operator		@			@			@			@			@	
3000	Backhoe Operator		@			@			@			@			@	
3100	Bulldozer Operator		@			@			@			@			@	
3200	Bulldozer Operator (Utility)		@			@			@			@			@	
3300	Concrete Finish Machine Screed Operator (Bridge)		@			@			@			@			@	
3500	Concrete Paving Machine Operator		@			@			@			@			@	

COMMONWEALTH OF VIRGINIA
DEPARTMENT OF TRANSPORTATION
BASIC HOURLY RATES PAID BY CONTRACTOR

Project No.: _____ Contractor: _____

23-26	(Computer Code)	27-28		30-33	34-36		37-40	41-43		44-47	48-50		51-54	55-57		58-61
3400	Concrete Finish Machine Operator		@			@			@			@			@	
3550	Concrete Pump Operator		@			@			@			@			@	
6700	Concrete Saw Operator		@			@			@			@			@	
3600	Crane, Derrick, Dragline Operator (1-cm & under)		@			@			@			@			@	
3700	Crane, Derrick, Dragline Operator (over 1-cm)		@			@			@			@			@	
3800	Crusher tender Operator		@			@			@			@			@	
3900	Drill Operator		@			@			@			@			@	
6800	Excavator Operator (Gradall Operator)		@			@			@			@			@	
4100	Front End Loader Operator (2-cm & under)		@			@			@			@			@	
4200	Front End Loader Operator (over 2-cm)		@			@			@			@			@	
4210	Fuel & Lubricant Service Truck Driver		@			@			@			@			@	
6900	Hydro-Seeder Operator		@			@			@			@			@	
6910	Log Skidder Operator		@			@			@			@			@	
6920	Mobile Mixer Operator		@			@			@			@			@	
4300	Motor Grader Operator (Fine Grade)		@			@			@			@			@	
4400	Motor Grader Operator (Rough Grade)		@			@			@			@			@	
4050	Pavement Marking Truck Operator		@			@			@			@			@	
4060	Pavement Marking Operator		@			@			@			@			@	
2910	Pavement Planing Groundman		@			@			@			@			@	
2905	Pavement Planing Operator		@			@			@			@			@	
4600	Pile Driver Operator		@			@			@			@			@	
4610	Pipe Boring /Jacking Machine Operator		@			@			@			@			@	
4620	Boom /Auger Operator		@			@			@			@			@	

Form C-28
Rev. 2-6-03

COMMONWEALTH OF VIRGINIA
DEPARTMENT OF TRANSPORTATION
BASIC HOURLY RATES PAID BY CONTRACTOR

Project No.: _____ Contractor: _____

23-26	(Computer Code)	27-28		30-33	34-36		37-40	41-43		44-47	48-50		51-54	55-57		58-61
4700	Plant Operator		@			@			@			@			@	
4800	Power Tool Operator		@			@			@			@			@	
4900	Roller Operator (Rough)		@			@			@			@			@	
5000	Roller Operator (Finish)		@			@			@			@			@	
5100	Scraper Pan Operator		@			@			@			@			@	
5110	Shot Blast Machine Operator		@			@			@			@			@	
5200	Shovel Operator (2-yd & under)		@			@			@			@			@	
5300	Shovel Operator (over 2-yd)		@			@			@			@			@	
5325	Slip-Form Paver Operator		@			@			@			@			@	
5350	Slurry Seal Paver Machine Operator		@			@			@			@			@	
5375	Slurry Seal Paver Truck Operator		@			@			@			@			@	
5400	Stablizer Operator		@			@			@			@			@	
5500	Stone-Spreader Operator		@			@			@			@			@	
5600	Subgrade Machine Operator		@			@			@			@			@	
5700	Tractor Operator (Crawlers)		@			@			@			@			@	
5900	Transit Mix Truck Driver		@			@			@			@			@	
6000	Trenching Machine Operator		@			@			@			@			@	
6100	Truck Driver Heavy Duty (over 7 c.y.)		@			@			@			@			@	
6200	Truck Driver Heavy duty (7 c.y. &under)		@			@			@			@			@	
6300	Truck Driver (Multi-Rear Axle)		@			@			@			@			@	
6310	Truck Driver (Tandem Rear Axle)		@			@			@			@			@	
6400	Truck driver (Single rear Axle)		@			@			@			@			@	
6410	Vacuum Machine Operator		@			@			@			@			@	

I certify that the above information is correct and corresponds with payroll records for this project for the period

Signed: _____ Date _____
(Contractor Representative Signature)

This report is to be submitted every 90 days covering all employees working during that period.

For Departmental Use Only
Number and Rates Reviewed by: _____ _____
(Name) (Title)

COMMONWEALTH OF VIRGINIA
DEPARTMENT OF TRANSPORTATION

CONSTRUCTION DIRECTIVE MEMORANDUM

GENERAL SUBJECT:	Federal Labor Compliance	**NUMBER:**	CD-2005-1
		DATE:	March 8, 2005
SPECIFIC SUBJECT:	Authority of the Department's Labor Compliance Administrator	**SUPERSEDES:**	Supersedes CD-98-1
		SUNSET/ EXPIRES:	March 8, 2010

Original with signature(s) on file in the office of the Scheduling and Contract Division

AMANDA VALLEJO
CIVIL RIGHTS DIVISION ADMINISTRATOR

W. BYRON COBURN, JR., P.E.
SCHEDULING & CONTRACT ENGINEER

PURPOSE: The purpose of this CD is to clarify the responsibility and authority of the Department's Project Inspectors, Designated Project Managers and Construction Managers, District Liaison Labor Representative, Labor Compliance Administrator, Contract Engineer, and Scheduling and Contract Engineer.

DIRECTED TO - **DISTRICT ADMINISTRATORS**

GUIDELINES FOR LABOR COMPLIANCE ON DAVIS BACON /FEDERAL-AID CONSTRUCTION PROJECTS

Compliance with Federal labor requirements is a condition of participation in Federal-aid highway projects pursuant to 23 U.S.C. Section 114. It is a requirement of all highway contracts that Federal and State labor regulations are observed throughout the prosecution of the work.

Labor Compliance is a contract administration issue, which is administered by the Civil Rights Division with assistance from the Scheduling and Contract Division.

In very general terms, the duties of those responsible for the enforcement of the aforementioned requirements are as follows:

A. Inspectors - The Project Inspectors are the Department's on-site Field Labor Compliance Officers, and should have a good working knowledge of Federal and State Labor regulations applicable to Labor Compliance responsibilities of the Department. The Project Inspector has the responsibility and authority to make routine checks of Contractor's and subcontractors' payrolls for accuracy and completeness with regard to names and addresses of employees, job classification, wage rates, hours worked, gross earnings, itemized deductions, and net weekly wages paid. All approved subcontractors payrolls must be forwarded through the Prime Contractor to the Project Inspector and must bear certification that the Prime Contractor has reviewed them.

Project Inspectors have the responsibility and authority to conduct, at random, on-site interviews with Contractors' employees to:

- Determine the accuracy of records;
- Aid in substantiating or assessing alleged violations and give employees the opportunity to point out other violations;
- Examine the validity of claimed exemptions;
- Determine whether the employee is properly classified in the work he / she is doing;
- Assure the required posters and wage rates are posted as required in the Specifications;
- Assure the Contractor and subcontractors submit the required Weekly Statement of Compliance, Form C-56 (WH-348) on Federal-aid projects with the payroll. This affidavit relates to Anti-Kickback regulations, the Davis-Bacon Act, Work Hours Act and Fringe Benefits, and is required throughout the course of the work; and
- Record the results of the employee interviews in the project diary.

These interviews should be performed at random. The first interviews should be performed within the first 30 days after the Contractor has fully mobilized. Subsequent interviews should be performed no less than semi-annually and when new work crews are assigned to the project.

B. Designated Project Manager and Construction Manager - Responsible for assuring that applicable specifications, provisions, and associated policies, procedures, and guidelines are enforced.

C. District Liaison Labor Representative (District Civil Rights Manager) - Provides technical interpretations and guidance to the Residency, reviews submittals for accuracy and completeness, prepares and submits required and/or requested reports, i.e., Forms C-28, C-51, certified payrolls as requested, and Semi-Annual Labor Reports FHWA 1494. The District Liaison Labor representative will conduct investigations involving employee complaints, i.e., certified payrolls, predetermined wages, overtime, fringe benefits, classifications, and Copeland Anti Kickback violations. The District Liaison Labor Representative will also assist the Labor Compliance Administrator in labor compliance reviews, investigations, and oversight authority on district labor violations.

D. Labor Compliance Administrator (Civil Rights Division Administrator) - The Administrator shall rule on all disputes, that may arise as to the proper interpretation of federal labor compliance regulations, policies, and guidelines. The Administrator may make, at their discretion, random field labor compliance reviews and investigations on the Department's construction projects. They shall also reserve the authority to review and obtain copies of any and all District's records and/or documentation pertaining to Labor Compliance inclusive of, but not limited to, letters, forms, employee field reviews, reports, and labor investigative reports. The Administrator will have oversight authority on district labor investigations involving labor violations that may result in administrative or criminal sanctions. The Administrator may conduct additional investigations with the assistance of district personnel if needed. These types of investigations will be discussed with the Contract Engineer and the Scheduling and Contract Engineer who will work with the Civil Rights Division Administrator to determine administrative actions where warranted. Investigations that may result in criminal action will be forwarded under the direction of the Scheduling and Contract Engineer to the appropriate authorities (i.e., the Federal Highway Administration, the Department of Labor, or the Attorney General's office, as appropriate).

While these descriptions are certainly not all inclusive, they serve to reiterate the authority and responsibilities of those involved in labor compliance activities.

Individuals listed below are the persons authorized to handle all inquiries in reference to labor compliance:

Labor Compliance Administrator - Civil Rights Division Administrator
District Liaison Labor Representative - District Civil Rights Manager

DL: wskjr

CC: Mr. Philip A. Shucet
Mr. Donald R. Askew, P.E.
Commissioners Staff
Division Administrators
District Construction Engineers
District Maintenance Engineers
District Civil Rights Managers
District Contract Managers
Residency Administrators
Assistant Resident Engineers
Construction Managers
Project Inspectors
Federal Highway Administration
American Concrete Pavement Association
Virginia Ready-Mixed Concrete Association
Precast Concrete Association of Virginia
Virginia Department of Minority Business Enterprise
Virginia Transportation Construction Alliance
Old Dominion Highway Contractors Association
Virginia Asphalt Association

Form C-13
Rev. 9-28-98c

COMMONWEALTH OF VIRGINIA
DEPARTMENT OF TRANSPORTATION

CONTRACTOR'S PROGRESS SCHEDULE FOR CONSTRUCTION PROJECTS

CONTRACT ID. NO.: _____ PROJECT NO.: _____

ROUTE: _____ COUNTY: _____

MAJOR COMPONENTS OF WORK								
	CLEARING & GRUBBING	GRADING	SELECT MATERIAL & SUBBASE	BASE	SURFACE	CULVERTS & BRIDGES	MISC. ITEMS	
CONTRACT TIME	% PROGRESS	% PROGRESS	% PROGRESS	% PROGRESS	% PROGRESS	% PROGRESS	% PROGRESS	% TOTAL PROGRESS
*DOLLAR VALUE BY COMPONENT								

TOTAL CONTRACT TIME _____ *TOTAL CONTRACT VALUE _____

*ROUND TO NEAREST DOLLAR
(SEE PAGE 2 FOR FILING INSTRUCTIONS)

COMMONWEALTH OF VIRGINIA
DEPARTMENT OF TRANSPORTATION

APPROVED BY: _____ CONTRACTOR: _____
TITLE: _____ BY: _____
DATE: _____ DATE: _____

FILING INSTRUCTIONS

THE COMPLETED SCHEDULE MUST BE APPROVED BY VDOT PRIOR TO PAYMENT OF THE FIRST ESTIMATE, NO CONSIDERATION IS TO BE GIVEN FOR ANTICIPATED SHUTDOWN TIME IN THE PREPARATION OF THE SCHEDULE.

This schedule shall define the contract work by major components and indicate the anticipated progress in percentages for each time period using accumulative totals, based on the dollar value of work to be performed on each. The Contractor shall submit, with the schedule, an itemized breakdown, showing the various contract items and costs that have been included under each component. When an item is distributed under more than one component, the itemized breakdown is to list the item and the proportionate cost for each component.

Column 1 **Contract Time:** For a fixed date project, show the name of each month within the contract time limit. The first month is to be from the date by which the Contractor is to proceed with construction until the first monthly estimate date and the name of the month is to correspond with the estimate month. The last month is to be from the last monthly estimate date to the Time Limit date and the name of the month is to be the Time Limit date.

E X A M P L E:

Contractor-Austin Construction Co.
Time Limit-September 1, 1999
Notified to Proceed on-April 15, 1996
First Month-May, 1996 (4-15-96 thru 5-4-96)
Last Month-September 1, 1999 (8-5-99 thru 9-1-99)

For Calendar Day projects, show the number of calendar days within the contract time limit in 30-day increments. (Example: 110 day Time Limit-30, 60, 90, 110)

Column 2 **Clearing and Grubbing:** This component includes clearing and grubbing and demolition items.

Column 3 **Grading:** This component includes regular excavation, borrow excavation, pipe, box culverts, except those having "B" designations, retaining walls, drop inlets and other minor drainage structures.

Column 4 **Select Material and Subbase:** This component includes select material and all subbase, including soil cement if it is being placed as a subbase.

Column 5 **Base:** This component includes all types of base courses, including portland cement concrete pavement base when a bituminous concrete pavement is placed on top for the riding surface.

Column 6 **Surface:** This component includes all types of surfaces that will form the finish surface for travel.

Column 7 **Culverts and Bridges**: This component includes all bridge structures and box culverts having "B" designations.

Column 8 **Miscellaneous Items:** This includes all items in the contract not listed in Columns 2 through 7.

Column 9 **% Total Progress:** Show the total percent of contract anticipated to be completed for each time period, using accumulative totals.

At the bottom of the columns, show the nearest dollar, the total value of each component and the contract value. The sum of the values of the various components is to equal the total contract value, subject to allowance for rounding components to nearest dollar.

COMMONWEALTH OF VIRGINIA
DEPARTMENT OF TRANSPORTATION
HIGHWAY CONSTRUCTION CONTRACTORS
MONTHLY EEO REPORT

Project No. _____

Contract ID No. _____

REPORT for the MONTH & YEAR of

_____

MONTHLY EEO REPORT

1. MARK APPROPRIATE BLOCK	2. COMPANY NAME, CITY, STATE:	3. FED PROJECT No.:	4. DOLLAR AMOUNT OF CONTRACT:	5. TYPE OF CONSTRUCTION
□ Contractor □ Subcontractor				

6. COUNTY AND STATE	7. PERCENT COMPLETE	8. BEGINNING CONSTRUCTION DATE	9. ESTIMATED PEAK EMPLOYMENT	
			MONTH & YEAR (a)	NO. OF EMPLOYEES (b)

10. EMPLOYMENT DATA

TABLE A																			TABLE B			
JOB CATEGORIES	TOTAL EMPLOYED		TOTAL RACIAL/ ETHNIC MINORITY		BLACK or AFRICAN		HISPANIC OR LATINO		AMERICAN INDIAN OR ALASKA		ASIAN		NATIVE HAWAIIAN OR OTHER		TWO OR MORE RACES		WHITE		APPRENTICES		ON THE JOB TRAINEES	
	M	F	M	F	M	F	M	F	M	F	M	F	M	F	M	F	M	F	M	F	M	F
OFFICIALS																						
SUPERVISORS																						
FOREMEN/WOMEN																						
CLERICAL																						
EQUIPMENT OPERATORS																						
MECHANICS																						
TRUCK DRIVERS																						
IRONWORKERS																						
CARPENTERS																						
CEMENT MASONS																						
ELECTRICIANS																						
PIPEFITTER/PLUMBERS																						
PAINTERS																						
LABORERS-SEMI SKILLED																						
LABORERS-UNSKILLED																						
TOTAL																						
TABLE C *(Table B data by racial status)*																						
APPRENTICES																						
OJT TRAINEES																						

8. PREPARED BY:	9. DATE	
(Signature and Title of Contractors Representative)		

Form FHWA- 1391 (Rev. 06-10)

PREVIOUS EDITIONS ARE OBSOLETE

Form C-64
Rev. 10-28-06

COMMONWEALTH OF VIRGINIA
DEPARTMENT OF TRANSPORTATION
CONTRACTOR/SUBCONTRACTOR
EQUAL EMPLOYMENT OPPORTUNITY
INFORMATION REQUEST

This report is developed to reflect the Total Employment of each Contracting firm performing Highway Construction Work in Virginia. It is to be used as a tool in evaluating the Contractor's posture to ensure equal employment opportunity. The requested information is to be submitted to the Responsible Charge Engineer prior to releasing the project for construction and is required of each subcontractor as part of the subletting request.

NAME OF COMPANY _____ CONTRACTOR _____

ADDRESS _____

_____ SUBCONTRACTOR _____

FIRMS EEO OFFICER _____

_____
Official Title

TOTAL COMPANY EMPLOYMENT AS OF _____ _____ (updated report required each 6 months)
MONTH YEAR

EMPLOYMENT DATA

Report all permanent, temporary or part-time employees. Enter the appropriate figures on all lines and in all columns. Include apprentices and on-the-job trainees in appropriate job category totals.

Job Categories	All Employees			Minority Group Employees									
				Male					Female				
	Total (Col. 2+3)	Male	Female	Black American	Asian/ Indian American	Asian/ Pacific American	Native American	Hispanic American	Black American	Asian / Indian American	Asian/ Pacific American	Native American	Hispanic American
	(1)	(2)	(3)	(4)	(5)	(6)	(7)	(8)	(9)	(10)	(11)	(12)	(13)
Officials & Managers													
Professionals (Engr. Etc.)													
Supervisors													
Foremen													
Clerical													
Equipment Operators													
Mechanics													
Truck Drivers													
Ironworkers													
Carpenters													
Cement Masons													
Electricians													
Pipefitters, Plumbers													
Painters													
Laborers (Unskilled)													
Other													
Total													

(Include all company employees enrolled in formal on-the-job training programs)

ON THE JOB TRAINEES	Operators													
	Craftsmen													

I certify that the employment data shown above represents the ethnic composition of the firm's employment.

Prepared by _____ _____ _____
Signature Title Date

COMMONWEALTH OF VIRGINIA
DEPARTMENT OF TRANSPORTATION

SUBLETTING REQUEST

Date _____ Route _____ City/Co. _____ Sublet No. _____
Dept Use Only

Project _____

FHWA _____ Contract Id. No. _____
Dept. Use Only

Prime Contractor _____ Vendor No. _____

Proposed Subcontractor _____ Vendor No. _____

Contract Items and Amounts Proposed to be Sublet								
Item No.		Item Description		Quantity*		Unit Price*		$ Amount

* Total quantities and/or the unit price being sublet can not exceed the contract quantity and/or the contract unit price. An explanation shall be provided if the unit price shown is less than the contract unit price.

Page Total $ _____

Supplemental Page(s) $ _____

No. of Pages_____
Total Requested $ _____

(Continued)

Contract Id. No. _____ Sublet No. _____
Dept. Use Only Dept. Use Only

Proposed Subcontractor

This is to certify that as an authorized representative of the below listed subcontractor, I have reviewed, understand, and agree to comply with the stipulations in the "Required Contract Provisions Federal-Aid Construction Contracts". (If contained in the contract for the above listed project)

Name of Subcontractor

Address Phone No.

City, State and Zip

By: Signature(Officer of Subcontractor) Title Date

Prime Contractor

As an authorized representative of the prime contractor, I certify that this sublet meets and is in accordance with the requirements of the contract for the above project between the undersigned contractor and the Commonwealth of Virginia/Virginia Department of Transportation. I certify that the actual subcontract agreement for which this sublet approval request is made contains the stipulations in the “Required Contract Provisions Federal-Aid Construction Contracts”. (If contained in the contract for the above listed project)

Name of Prime Contractor

Address $ Actual Amount of Subcontract

City, State and Zip Phone No.

By: Signature(Officer of Prime Contractor) Title Date

VDOT Approval of Contractor's Subletting Request

RECOMMENDED FOR APPROVAL APPROVED

District Administrator (or Designee) Date District Administrator (or Designee) Date

Sublets under $25,000 $

Sublets to Date $

Percent Sublet

The original of this form is to be submitted to the Department’s Responsible Charge Engineer for the Contract (or their Designee)

Original - District File

Form C-63
Rev. 7-06-07

COMMONWEALTH OF VIRGINIA
DEPARTMENT OF TRANSPORTATION
DBE AND SWAM PAYMENT COMPLIANCE REPORT

Page(s) _____ Of _____
(1a) Report No. _____
(1b) Period Ending _____

(2a) Federally Funded ☐
(2b) State Funded ☐
(2c) Order No. _____ **(2d)** Date of Execution _____
(2e) Contractor/Subcontractor _____
(2f) Route No. _____ **(2g)**Project No. _____ **(2h)**Contract Id. No. _____
(**2i**)FHWA No _____ **(2j)**District _____

(3) DBE and SWAM Firm Name, Certification No.	**(4)** Tax I.D. No.	**(5)**DBE and SWAM Category	**(6)** Allowable Credit of Contract or Agreement	**(7)** Allowable Credit		**(8)** Disallowed Credit (VDOT Use Only)		**(9)** Type of Work (Indicate Item Numbers & Work Description)
				(7a) This Quarter	**(7b)** To Date	**(8a)** This Quarter	**(8b)** To Date	
		DBE/MBE						
		DBE/MBE						
		DBE/MBE						
		DBE/MBE						
		DBE/MBE						
		DBE/MBE						
Total Dollar Amount Paid by Quarter and To Date by DBE and SWAM Category			DMBE					
			DWBE					
			SBE					
			WBE					
			MBE					

All "amounts paid" to certified DBE and SWAM firms are to be reported and submitted by VDOT's quarterly submittal schedule. See Instructions.

I/WE certify under penalty of law that the information provided herein is accurate, current, and complete to the best of my/our Knowledge.

Signature and Title of Company Official _____ Date _____
Print Name and Phone Number of Individual Completing Report _____

VIRGINIA DEPARTMENT OF TRANSPORTATION
INSTRUCTIONS FOR
DBE/SWAM PAYMENT COMPLIANCE REPORT – C63

The Prime Contractor is required to submit a DBE Payment Compliance Report and requested to submit payments made to Small, Women-owned, and Minority-owned (SWAM) Business Enterprises for the designated quarterly reporting period. All amounts paid to **certified** DBE and SWAM businesses are subject to monitoring and enforcement mechanisms. It is the responsibility of the prime contractor to provide evidence of DBE and SWAM payments in response to monitoring and enforcement compliance reviews.

The instructions below correspond to each item on the report. Please follow the instructions.

1a. **Report No.**
Indicate the number of the report you are sending in sequence. For example: If this is the second report you are submitting, enter Report No. 2.

1b. **Period Ending**
Indicate the reporting period based on the Reporting Schedule listed in these instructions.

2a. **Federally Funded**
Indicate if contract is federally funded.

2b. **State Funded**
Indicate if contract is state funded.

2c. **Order No.**
Enter the "Call Order" number assigned to your project by VDOT

2d. **Date of Execution**
Enter the date the contract was executed by VDOT.

2e. **Contractor/Subcontractor**
Enter your company's name.

2f. **Route No.**
Enter the highway route number shown in your contract.

2g. **Project No.**
Enter the project number assigned to your project by VDOT.

2h. **Contract Id. No.**
Enter the contract identification number assigned to your project by VDOT.

2i. **FHWA No.**
Enter the FHWA number assigned to your project.

2j. **District**
Enter the District where the project under contract is located.

3. **DBE and SWAM Firm Name, Certification No.**
Enter all DBE/SWAM subcontractors utilized and their certification number.

4. **Tax I.D. No.**
Indicate the Federal Employer Identification No.

5. **DBE and SWAM Category** (As certified by the Virginia Department of Minority Business Enterprise)
Designate type of DBE/SWAM business:
DBE: DMBE – Disadvantaged Minority-owned Business
DWBE – Disadvantaged Woman-owned Business

SWAM: SBE – Small Business
MBE – Minority-Owned Business
WBE – Woman-Owned Business

6. **Allowable Credit of Contract or Agreement**
Dollar value of contract or agreement to be performed by the DBE and SWAM during the contract or agreement which is allowable for participation credit.

7a. **Allowable Credit This Quarter**
Dollar amount that can be credited for work performed in reporting quarter.

7b. **Allowable Credit To Date**
Dollar amount that can be credited for work performed since work commenced.

8a. **Disallowed Credit This Quarter**
Dollar amount of payment paid to DBE and SWAM that is NOT allowable for participation credit in reporting quarter.

8b. **Disallowed Credit To Date**
Dollar amount of payment that is NOT allowable for participation credit since work commenced.

9. **Type of Work** (Indicate Item Numbers)
State work item(s) performed and give description.

Effective July 1, 2007, All Form C-63s for a particular reporting period shall be submitted in an electronic format to the respective person in responsible charge in each District by the following dates of each calendar year.

REPORTING SCHEDULE

Quarter	Reporting Period	Date Due To Responsible VDOT Residency
1st	July 1 – September 30	Five (5) working days after the reporting period
2nd	October 1 – December 31	Five (5) working days after the reporting period
3rd	January 1 – March 31	Five (5) working days after the reporting period
4th	April 1 – June 30	Five (5) working days after the reporting period

If the submittal date falls on a weekend/holiday, the forms shall be submitted to the VDOT Responsible Charge District Office on the following business day.

INSTRUCTIONS FOR SAVING FORM C-63 DATA IN PDF FORMAT

Please be advised that the information that you have placed on the Form C-63 (PDF format) will not save to the file when you close the file. **To save your information while using the PDF format, you must use the correct procedures outlined below.**

** The following steps will describe the correct procedure for saving the data that you have placed on the PDF version of the Form C-63:

Step #1 CLICK ON **"File"**

Step #2 CLICK ON **"Save A Copy"**

Step #3 CLICK ON **"Save A Blank Copy"**

Step #4 ENTER your **"Firm Name"** as the File Name

Step #5 ENTER the **"Order Number"** (see line 2c on Form C-63)

Step #6 ENTER **Underscore (_)**

Step #7 ENTER **"Report Number"** (see line 1a on Form C-63)

Step #8 ENTER **"Quarter Ending"** (see line 1b on Form C-63)

Step #9 ENTER the **"Year"** (last two digits only)

Step #10 ENTER "**.pdf**" as the appropriate file ending

EXAMPLE:

Firm Name:	Vdot Construction Co.
Order No.:	A01
Report No.:	5
Quarter Ending:	1st Quarter (Jul.1 – Sept. 30)
Year:	07

Using the information in the example, your file would be saved as**:**

vdotA01_050107.pdf

TECHNICAL

SPECIFICATIONS

SECTION 100 - GENERAL REQUIREMENTS

100.00 GENERAL REQUIREMENTS

a. The following Specifications for Traffic Signals – Indefinite Quantity Contract, herein referred to as the Specifications, augment the Virginia Department of Transportation, Road and Bridge Specifications, 2007 and any supplemental thereto, in effect on the date of Invitation for Bids shall comprise the Technical Specifications for this contract. In case of conflict with any part or parts of said Specifications or Supplemental Specifications, these standard specifications for Traffic Signals shall take precedence and shall govern.

b. **Scope of Work.** The scope of work under this contract shall be to obtain the services of a qualified Contractor to construct traffic signals in their entirety or individual components of signals or communication facilities on an as-required basis. This contract will be used under both emergency and non-emergency conditions with specific performance period requirements. The contractor shall furnish all labor, materials, and equipment necessary to complete the work as described herein.

100.01 CONTRACT SUMMARY

a. The Contract shall be a firm, fixed-price, indefinite quantity, indefinite delivery Work Order Contract. Delivery or performance shall be specified in individual Work Orders. The total dollar amount of Work and the number of individual Work Orders issued will primarily depend on the City's needs and funds available and secondarily on Contractor performance and customer satisfaction. The City reserves its right to obtain similar work through any other means at its discretion.

b. **Unit Price Increases.** The City shall consider requests for an adjustment for the cost of steel-related items due to change in industry prices based upon a minimum 15% increase or decrease in cost of steel. The Contractor shall be responsible to submit in writing a request for any unit price adjustment. The City will review the supporting documentation from a minimum of three (3) steel suppliers, reflecting a change in price from the time of bid to the time of a specific Work Order. It shall be the Contractor's responsibility to clearly document the cost of steel-related items in effect at the time of bid and subsequently submit said documentation to the City with the execution of the contract. The City shall have sole discretion to approve such adjustment based upon submitted request.

c. **Contract Time.** The contract will be effective for a base period of twelve (12) months which begins with the Notice to Proceed date. The City reserves the right to extend the contract for new work based on the same contract scope/specifications/unit prices for an interval of one year (not to exceed two intervals) providing the City and the Contractor are in agreement. Both parties shall advise each other in writing of their intention to extend or not extend the contract no later than 30 calendar days prior to the latest contract completion date.

d. **Work Order Limit.** There is no minimum Work Order amount. The maximum limit per each individual Work Order is set at $200,000 unless authorized by the Director of Public Works.

e. **Annual Contract Limit.** There is not minimum Annual Contract limit. The maximum limit allowed per contract year is set at $1,000,000 unless authorized by the Director of Public Works.

f. **Liquidated Damages**.

1. **Performance Period Requirements.** Because of the public safety implications, the Contractor's response time is an essential element of the services for several components of this contract. The following general response time requirements are specified for this contract:

Table 1 **Response Time & Liquidated Damages**

Type of Response	Response Time	Liquidated Damages
Emergency Response	3 hours	$400.00 / Hour
Quick Response	3 days	$250.00 / Day
Normal Response	5 days	$100.00 / Day

2. It must be completely understood that an item is not an emergency unless declared as an "Emergency" by the Project Manager. The following governing conditions also apply:

(a) The lead time for Quick and Normal Response may be increased or decreased by the Project Manager when project material require additional procurement time or when material is provided by the City.

(b) Additional performance time may be authorized by the Project Manager due to unforeseen events or acts of nature.

(c) For emergency tasks, there shall be no lead time and the Contractor shall work continuously to the completion of work.

(d) Contractor shall be compensated for declared emergency services at a reasonable rate as predetermined by the unit price pay item for emergency response and quick response.

3. **Emergency Response** is an essential element of ensuring the safety of the traveling public. The Contractor shall respond to requested work within the time frame shown in Table 1 upon notification from the Project Manager or City Representative. The main objective shall be to safeguard the traveling public and perform necessary work to ensure this. The notification shall be either in writing, fax or telephone conversation. The Contractor shall furnish emergency contact person and phone numbers prior to commencing the contract.

(a) **Measurement and Payment** shall be measured and paid for in units of EACH (EA) and shall include mobilization, travel time, necessary equipment, and labor cost for each occurrence to respond on site. Once problem/conflict evaluation has been determined and the occurrence has been safeguarded for the general public, all necessary work items shall be identified. Contractor shall be dually compensated for those appropriate pay items identified in addition to the emergency response pay item.

4. **Quick Response** is an essential element of ensuring the safety of the traveling public. The Contractor shall respond to requested work within the time frame shown in Table 1 upon notification from the Project Manager or City Representative. The notification shall be either in writing, fax or telephone conversation. The Contractor shall furnish contact person and phone numbers prior to commencing the contract.

A. **Measurement and Payment** shall be measured and paid for in units of EACH (EA) and shall include mobilization, travel time, necessary equipment, and labor cost for each occurrence to respond to request. Contractor shall be dually compensated for those appropriate pay items identified in addition to the quick response pay item for the request task.

5. **Normal Response** is an essential element of ensuring the safety of the traveling public. The Contractor shall respond to requested work within the time frame shown in Table 1 upon notification from the Project Manager or City Representative.

A. **Measurement and Payment** shall be measured and paid for in units of EACH (EA) and shall include mobilization, travel time, necessary equipment, and labor cost for each occurrence to respond to request. Contractor shall be dually compensated for those appropriate pay items identified in addition to the normal response pay item for the request task.

6. The Contractor shall be assessed liquidated damages in the amount indicated in Table 1 per working day for each working day beyond the time period within which the Contractor must begin. Once work begins, it shall be continuously performed to completion. Liquidated damages will be assessed for each occurrence of failure to complete on time, throughout the life of the contract.

g. **Declaration of Emergency Conditions.** The issuance of a Declaration of Emergency Conditions by any authorized government official shall cause this Contract to be activated at the terms and conditions listed in the Contract. The Contractor shall make available to the City of Norfolk, during the time of the declared emergency, his time and equipment for services deemed necessary by the City to address this emergency. Failure to comply could result in termination of the contract by reason of non-compliance.

100.02 WORK ORDERS

a. All Work Orders issued under the contract shall be approved by the Engineer in writing after the scope of work, price and schedule are submitted in writing. The following procedures will be utilized in assigning Work Orders:

1. By letter of transmittal, the City will send the Contractor a list of the locations and two sets of the proposed project plans, if applicable.

2. Within five (5) working days (or as agreed between the City and Contractor) from the date of the letter of transmittal referred to above, the Contractor will respond by letter to the Project Engineer the following information. (Working days are counted Monday through Friday excluding City of Norfolk authorized holidays).

(a) The Contractors agreement or disagreement with the estimated project quantities.

(b) The estimated project cost based on the agreed estimated quantities.

(c) Specify the length of time, in calendar days, that will be required to complete the project. The Contractor shall determine the duration by using the most current edition of the R.S. Means "Heavy Construction Cost Data." The City Project Manager may grant an extension of the allowable completion time when work is delayed by factors which are beyond the control of the Contractor. Extensions will not be granted for delays due to the fault of negligence of the Contractor.

3. The City will respond within five (5) working days to the Contractors letter referred to above.

4. A Work Order will be issued with a Notice to Proceed and shall include the scope, cost of the work and the completion date. The Work Order/Notice to Proceed letter will be issued prior to the actual commencement of any work. The Contractor shall commence work within five (5) days of the issuance of a Work Order.

5. During the contract period the Contractor may be required to work on several different projects at several different locations simultaneously. There is no guarantee as to the location of these projects in relation to each other.

6. The Project Manager reserves the right to make, in writing, at any time during the work, such changes as are necessary to complete the project. Such changes in alterations shall not invalidate the Work Order nor release the surety, and the Contractor. Under this condition, the unit prices shall be the costs used to price each Work Order.

b. Some Work Orders will require compliance with the Davis-Bacon wage rate requirements. The requirement will be stated within the Work Order and the Contractor must be able to provide sufficient documentation, as determined by the City, showing compliance with the Davis-Bacon Act and the Special Provisions for Federal-Aid Construction Contracts.

c. **Failure of the Contractor to complete work or provide proposals as defined above, may result in the City not awarding additional work to the Contractor under this contract.**

100.03 WORK ASSIGNMENT, PLANNING, AND TIME

a. The Project Engineer will notify the Contractor when to proceed with work by issuance of a Work Order. The Contractor will be expected to respond within five working days to the respective Work Order, except for emergency response or quick response conditions. Ordering and purchasing the delivery of materials or mobilization of equipment or materials to the job site is considered as responding to the Work Order. All work begun shall be worked in a continuous and expeditious manner. Failure to do so shall constitute unsatisfactory progress. If the Contractor does not complete work by the end of the contract time, liquidated damages will be assessed according to these specifications.

b. For signalized intersection up to an additional 60 days for equipment procurement will be allowed. If the City furnishes the equipment then no equipment procurement time will be allowed. Upon to an additional 120 days for equipment procurement will be allowed for signalization projects that include mast arms. If the City furnishes the controller, poles, signal heads and detectors then no equipment procurement time will be allowed.

c. Work Orders will identify the location, description and amount of work to be accomplished. For Work Orders containing multiple types of work, the longest contract time shall govern.

d. The Project Manager will issue Work Orders to the Contractor with all work locations described by geographical or landmark reference points that will allow the Contractor to proceed immediately to the locations with minimum delay. The Project Manager will develop Work Orders so as to minimize the Contractor's travel requirements and cover all work required.

100.04 COOPERATION BY CONTRACTOR

a. No work shall be done, nor materials used, without suitable supervision or inspection by the Project Engineer or his representative.

b. All equipment shall display the Contractor's name in a prominent and clearly legible manner.

100.05 SUSPENSION OF WORK

a. The Project Engineer shall have the authority to suspend wholly or in part, for such period or periods as may be deemed necessary due to conditions that are considered unfavorable for the prosecution of the work, or for such time as is necessary due to the failure on the part of the contractor to comply with any or all provisions of the contract. Such suspension shall be ordered in writing, giving in detail the reasons for the suspension.

100.06 CONTRACTOR RESPONSIBILITY

a. **Personnel**

1. **Work Force and Office.** The Contractor shall at all times provide an adequate work force of properly qualified personnel (licensed and certified where required) sufficient to perform routine maintenance and system repair described herein.

2. **Supervisors/Contractor Representatives.** The Contractor shall provide the City Project Manager with names, addresses and telephone numbers (emergency and non-emergency) of at least two (2) responsible representatives of his organization to whom instructions may be given by the Project Manager. Contractor's Project Manager shall be available at all times (24 hours per day, seven days a week) during the term of this contract.

3. **Fiber Optic Cable Installer Requirements.** Personnel involved in the installation, splicing, and termination of the fiber optic cables shall meet the following minimum requirements:

A. Three (3) years experience in the installation of fiber optic cables, including splicing, terminating, and testing of single mode fibers.

B. Experience in having installed at least two (2) fiber optic networks, totaling at least 10 miles (16 km) of fiber optic cable in outdoor conduits, and where those networks have been in continuous satisfactory operation for at least two (2) years.

Submit documentation indicating the qualifications and experience of the personnel that will perform the installation, splicing and termination of the fiber optic cable. The documentation shall include names, addresses, and telephone numbers of two (2) network owners, who may be contacted regarding these installation personnel have been approved by the Project Manager in accordance with the minimum requirements specified herein.

4. **Traffic Signal Controller and Cabinet Installer Certification.** The Contractor shall have at least one traffic signal technician meeting International Municipal Signal Association (IMSA) Level III Traffic Signal Certification performing or present to supervise, and be in responsible charge of, the following work:

A. All electrical wiring terminations and splices, including but not limited to grounding, service entrances and loops.

B. Controller unit and cabinet assembly set-ups.

C. Testing and review of all operational electrical equipment.

A certified traffic signal technician shall be available on-site until conditional acceptance of all controller units. The Contractor shall submit the names and a copy of certification of the traffic signal technician Level III employees proposed for the project.

b. **Contractor's Equipment.** The Contractor shall furnish all transportation for his employees and equipment used in the performance or work of this contract. All equipment shall be of quality, quantity, and type to sufficiently perform as required for routine maintenance and major repair work. All repair equipment used by the Contractor shall conform with all applicable laws and safety requirements and shall be equipped with warning lights. All patrol vehicles shall be equipped with flashing amber lights.

c. **Permits, Notifications and Fees**

1. It shall be the Contractor's responsibility to secure all permits necessary to conduct the work in accordance with required regulations and to notify all applicable utilities or parties affected by his operations. He shall further be responsible for all fees associated with the performance of this contract.

2. No work shall be performed under the provisions of this contract on any properties outside the limits of the City maintained right-of-way without the express written permission under which such work is to be performed shall not constitute a liability to the City of Norfolk nor relieve the Contractor of his liabilities.

d. **Subcontractors.** The Contractor shall identify all sub-contractors participating in the contract **on the Bid Form.** The sub-contractor(s) shall remain the same for the life of the contract unless requested in writing by the prime contractor and approved by the Project Manager.

100.07 CONTROL OF MATERIALS

a. **General**

1. Only materials conforming to the requirements of the specifications and approved

by the Project Manager shall be used in the work.

2. Unless otherwise specified, materials for base construction and aggregates for Portland cement concrete and bituminous mixtures shall be obtained from approved sources. A copy of the design mix to be used shall be submitted to the Project Manager for approval prior to using the material on the project.

3. Unless otherwise specified, asphalt pavement shall be constructed of any plant mixed hot bituminous mixture meeting the requirements of a job mix formula issued by the City of Norfolk, Department of Public Works with the following limitations:

A. Surface course material shall generally be compatible with existing pavement in the vicinity of the work.

B. Friction course materials shall not be used for base or leveling of surface course construction.

4. Materials proposed for use may be inspected or tested at any time during their preparation and use.

b. **Materials Acceptance**

1. Contractor shall furnish certification of materials used and certification that the project was constructed according to contract requirements. The certification shall consist of a summary showing the kind and quantity of materials. This certification shall be provided for work units accomplished at the time of invoicing for final payment.

2. The Contractor shall preserve for inspection by the City of Norfolk invoices and records of the materials utilized in the work until such time as final acceptance and payment is made under this contract.

c. **Preservation of Property**

1. The Contractor shall preserve from damage all property associated with, or which is in the vicinity of, or is in any way affected by, the work. This applies to public and private property and/or utilities.

2. Any damage occurring to such properties shall be immediately repaired at the expense of the Contractor.

100.08 PROGRESS

a. **Status of Work.** The City of Norfolk, Project Engineer will be entitled at all times to be advised, at its request, as to the status of work being done by the Contractor and of the details thereof. Coordination shall be maintained by the Contractor with representatives

of the City. The Contractor shall notify the Project Manager of any changes of the weekly schedule. Either party to the contract may request, and be granted a conference.

b. **Indicated Items.** Items not directly outlined in these specifications shall be constructed in accordance with the referenced specifications. Measurement and payment for these items will be as set forth in the Bid Proposal. If not set forth in the Bid Proposal, the cost of these items shall be included in the price bid for other items which may include this work, and no additional compensation will be considered.

100.9 DAILY WORK ORDER LOG REPORTS

a. Contractor shall complete and provide daily work logs to the City while working on each Work Order. This will enable the City to better track specific work being performed as to equipment replacement, repair, new installation, when it was worked on and/or installed, etc. For non-compliance of submitting the daily work order log reports the Contractor is liable for compensation to City of Norfolk in the amount of 0.2% per Work Order value, per day for each Work Order issued.

100.10 WORK SCHEDULES AND MAINTENANCE OF TRAFFIC

a. The Contractor shall schedule work to minimize impact on the peak traffic periods. Peak periods are defined as 6:00 a.m. to 9:00 a.m. and 3:00 p.m. to 6:00 p.m., Monday through Friday. No lane closures shall be permitted during the peak periods.

b. The Contractor shall provide maintenance of traffic in accordance with the MUTCD 2009 and the latest Virginia Work Area Protection Manual. Failure to comply with this requirement will result in complete shutdown by the Project Manager with no additional compensation to the Contractor.

100.11 INSPECTION AND ACCEPTANCE

a. The City shall inspect all work upon completion of the work and formally accept the work. It shall be the Contractor's responsibility to schedule and hold preliminary and final acceptance meetings. Failure of City staff to detect discrepancies and poor workmanship and material shall not relieve the Contractor of the responsibility for completion of the task and successful operation as required. The Contractor shall warranty all work for a period of 12 months for workmanship and for period equal to the manufacturer's warranty period for material.

b. The Contractor shall certify that the work quantities and quality were accomplished in accordance with these specifications. This certification will be accomplished by signing and returning of the Work Order.

c. Acceptable work quality will be determined by the Project Manager. Reworking required due to Contractor negligence of inadequate procedures will be the responsibility of the Contractor. No additional payment will be due the Contractor for the reworking of

non-acceptable areas. Disagreements between the Contractor and the Inspector may be appealed to the Project Manager. The Project Manager's determination is final.

100.12 REFERENCE SPECIFICATIONS

a. Standards and specifications from the following may be referred to in the Technical Specifications which follow; such form a part of this specification to the extent indicated by the references hereinafter:

The Federal Manual on Uniform Traffic Control Devices, 2009 edition and the Virginia Supplement, latest edition.

Virginia Department of Transportation (VDOT), Road and Bridges Specifications 2007 and any supplemental thereto, in effect on the date of Invitation for Bids, current edition.

Virginia Department of Transportation (VDOT), 2008 Road and Bridge Standards.

Virginia Work Area Protection Manual

b. Unless otherwise noted, reference is to the latest dated publication of the specification or standard including any amendments or addenda.

END OF SECTION

SECTION 303 - EARTHWORK

VDOT Road and Bridge Specifications, 2007 Edition, shall be followed unless otherwise amended or supplemented with the specifications contained herein. Where conflicts occur, the specifications contained herein shall prevail.

303.03 - Erosion and Siltation Control – is amended as follows:

Add the following to the end of the first paragraph:

All erosion control measures shall be in accordance with the Virginia Erosion and Sediment Control Handbook, the Virginia Drainage Manual, current editions, and the VDOT Road & Bridge Specifications (2007).

Add the following to the end of the second paragraph:

Additional inspections for E&S control shall be performed by the City of Norfolk Department of Planning and Community Development's Environmental Services Division Environmental Department as agents of the Public Works Department.

The Contractor shall exercise every reasonable precaution, including application of temporary and permanent environmental measures, throughout the duration of the project to control erosion and prevent eroded materials from leaving contract limits in addition to preventing siltation of rivers, streams, lakes, and impoundments. Such measures shall include, but are not limited to, the use of beams, dikes, dams, and sediment basins, and fiber mats, brush silt barriers, silt fences, netting, gravel or crushed stone, mulch, stage seeding, slope drains, inlet protection, and other methods.

Temporary and permanent erosion and siltation control measures shall all be applied to erodible material exposed by an activity associated with the construction including local material sources, stockpiles, waste areas, and all haul roads.

Temporary measures shall be coordinated with the construction of permanent drainage facilities and other contract work to the extent practicable to assure economical, effective and continuous erosion and siltation control. The temporary and permanent drainage facilities shall be installed as soon as practicable, but shall be installed prior to commencement of earthwork or demolition. All drainage systems are to be kept free of eroded materials and siltation at all times, including drainage systems being constructed as part of this project. No compensation will be made for removal of eroded materials.

Inspect all temporary and permanent erosion and siltation control devices and measures for deficiencies prior to and immediately after each rainfall and at least daily during prolonged rainfall. Any deficiencies shall be immediately corrected by the Contractor. Failure on the part of the Contractor to adequately maintain all erosion and siltation control devices in a functional condition may result in the City of Norfolk representative notifying the Contractor in writing of the deficiencies.

In the event the Contractor fails to correct or to take appropriate actions to remedy the specified deficiencies within 24 hours after receipt of such notification, the City of Norfolk reserves the right to take appropriate actions to require the Contractor to discontinue work in other areas and to concentrate his efforts towards rectifying the specified deficiencies, or the City of Norfolk may proceed with adequate forces, equipment and materials to remedy the specified deficiencies and the entire cost of such work will be deducted from moneys due the Contractor.

303.06 – Measurement and Payment

Replace (e) Erosion Control Items with the following:

(e) Erosion Control Items

Erosion and Sediment Control measurement and payment shall be in Linear Feet (LF). Pay item shall consist of all materials, labor and equipment required to furnish, install, maintain and remove inlet protection and silt fencing, all in accordance with the contract drawings and specifications, as well as the *Virginia Erosion and Sediment Control Handbook*, 1992 edition.

Tree Protection measurement and payment shall be in Each (EA). Pay item shall consist of all materials, labor and equipment required to furnish, install, maintain and remove tree protection, all in accordance with the contract drawings and specifications, as well as the *Virginia Erosion and Sediment Control Handbook*, 1992 edition.

(f) Grading

Grading shall consist of regular excavation, undercut excavation, fill, backfill, topsoil or seed as necessary. Grading shall not be measured and paid for separately; it shall be considered incidental to other pay items.

End of Section

SECTION 502 – INCIDENTAL CONCRETE ITEMS

VDOT Road and Bridge Specifications, 2007 Edition, shall be followed unless otherwise amended or supplemented with the specifications contained herein. Where conflicts occur, the specifications contained herein shall prevail.

502.04 – Measurement and Payment – Delete Curb-Cut Ramps and replace with the following:

> **Handicap Ramp** will be measured in units of each type, complete-in-place, and will be paid for at the contract unit price per EACH (EA). Such price shall be full compensation for all tools, materials, equipment, labor and incidentals necessary to complete the work.

End of Section

SECTION 504 – SIDEWALKS, STEPS AND HANDRAILS

VDOT Road and Bridge Specifications, 2007 Edition, shall be followed unless otherwise amended or supplemented with the specifications contained herein. Where conflicts occur, the specifications contained herein shall prevail.

504.04 – Measurement and Payment

Hydraulic Cement Concrete Sidewalks – Add the following to the end of the first paragraph:

Price shall also include compaction of soil, fill material and bedding material. Compaction of soil shall meet maximum density requirements, in accordance with ASTM D-1557. Under sidewalks, compact top 12 inches of subgrade and each layer of fill or backfill material at 95 percent maximum density. Fill or backfill material shall be placed in lifts no greater than six inches.

Bedding Material – Delete in its entirety and replace with the following:

Bedding Material will not be measured for separate payment, but shall be considered incidental to the cost of the sidewalk.

End of Section

SECTION 508 – DEMOLITION OF PAVEMENT AND OBSCURING ROADWAY

VDOT Road and Bridge Specifications, 2007 Edition, shall be followed unless otherwise amended or supplemented with the specifications contained herein. Where conflicts occur, the specifications contained herein shall prevail.

508.03 – Measurement and Payment – is amended as follows:

Add the following to the end of Section 508.03:

Demolition Saw Cutting (Type) will be measured in units of Linear Feet (LF). The unit price shall include all labor, tools, and equipment for saw cutting existing rigid or flexible pavement proposed for demolition as shown on the Contract Drawings.

End of Section

SECTION 510 – RELOCATING OR MODIFYING EXISTING MISCELLANEOUS ITEMS

VDOT Road and Bridge Specifications, 2007 Edition, shall be followed unless otherwise amended or supplemented with the specifications contained herein. Where conflicts occur, the specifications contained herein shall prevail.

510.03 – Procedures – Add the following to the end of the first paragraph:

Removal of Existing Traffic Control Equipment and Supports

This section specifies general requirements for the removal of existing traffic equipment including electrical and electronic equipment, supporting hardware and electrical wiring, conduit and dismantling of sign structures or other support elements specified and required to clear the areas of concern for new installations.

The removal of existing equipment by the Contractor shall include salvaging, careful handling; transporting and protecting such equipment and materials designated for removal or dismantling in the contract plans and specifications.

1) Ownership

   The equipment removed shall remain the property of the City unless otherwise stated in the Contract Documents or directed by the Engineer.

2) General Removal Operations

   Where the removals require excavation, the excavated areas (unless to be used as areas for other installations) shall be backfilled, compacted and leveled, so as to form a smooth contour, uniform in density with adjacent ground areas.

   Where the removal operations require the removal or disturbance of overlying pavement, curb, grass or sidewalk, such pavement, etcetera shall be removed in a workmanlike manner and subsequently replaced in kind (or equivalent) in accordance with these Specifications.

   Electronic equipment to be removed shall be removed, handled and transported with all due care. Any damage to such equipment caused by negligence of the Contractor's operations shall be corrected at his expense regardless of whether the damage occurs before or after removal of the equipment.

   The removal of all electronic equipment shall include removal of all attaching devices and all other devices and auxiliaries related to the

electronic unit, which are not required to remain in place for use with replacing equipment.

All removals shall be in such a manner that damage or disturbance will not occur to adjacent property, utilities, or other equipment.

Where existing functioning installations are to be replaced by new installations, the existing installations are not to be removed until the new installations are in place and operating or the Contractor has provided approved temporary traffic control or as specified under the provisions of the Specifications or the Special Provisions.

The Contractor shall notify the proper authorities or the owners of affected adjacent installations at least twenty-four (24) hours in advance of any removal operations of their facilities.

Where the contract documents indicate poles are to be removed by their owners (or others), the Contractor shall be responsible for the careful removal and handling of all signal equipment from such poles prior to removal of the poles.

3) Specific Removal Operations

Removal and Dismantling of Poles and Pedestals:

The removal of poles and pedestals shall include the removal of their foundations and any pole keys or dead men, guying apparatus and other accessories or attachments thereto as may be encountered.

The removal process of poles and pedestals shall be accomplished in such a manner as not to result in a safety hazard to motorists or adjacent property and such dismantling process shall be approved in advance by the Traffic Engineer.

Where permitted by the Traffic Engineer only partial removal of the foundation may be required, in which case any protrusions, such as conduit, anchor bolts or reinforcing steel, shall be cut at least two (2) feet below final grade. Unless specified on the plans, the Contractor shall not remove or disturb utility poles located within the right-of-way.

510.04 – Measurement and Payment – Add the following to the end of the first paragraph:

This price shall also include all saw cutting associated with items to be removed.

Remove Existing Mast Arm Pole: Remove Existing Mast Arm Pole will be measured in units of EACH (EA). The unit price shall include all labor, tools, and equipment for complete removal and dismantling of traffic mast arm pole, and shall be full compensation.

Remove Existing Street Lighting Pole: Remove Existing Street Lighting Pole will be measured in units of EACH (EA). The unit price shall include all labor, tools, and equipment for complete removal and dismantling of street light pole, and shall be full compensation.

Remove Existing Pedestal Pole: Remove Existing Pedestal Pole will be measured in units of EACH (EA). The unit price shall include all labor, tools, and equipment for complete removal and dismantling of pedestal pole, and shall be full compensation.

Remove Existing Strain Pole: Remove Existing Strain Pole will be measured in units of EACH (EA). The unit price shall include all labor, tools, and equipment for complete removal and dismantling of traffic strain pole, and shall be full compensation.

Remove Existing Mast Arm Pole Foundation: Remove Existing Mast Arm Pole Foundation will be measured in units of EACH (EA). The unit price shall include all labor, tools, and equipment for complete removal of a concrete foundation to 2 feet below grade, and shall be full compensation for removal and disposal. The unit price shall also include restoration of ground or sidewalk to grade.

Remove Existing Pedestal Pole Foundation: Remove Existing Pedestal Pole Foundation will be measured in units of EACH (EA). The unit price shall include all labor, tools, and equipment for complete removal of a concrete foundation, and shall be full compensation for removal and disposal. The unit price shall also include restoration of ground or sidewalk to grade.

Remove Existing Street Lighting Pole Foundation: Remove Existing Street Lighting Pole Foundation will be measured in units of EACH (EA). The unit price shall include all labor, tools, and equipment for complete removal of a concrete foundation to 2 feet below grade, the installation of a junction box (modified JB-2C – open bottom) at the existing foundation location, and shall be full compensation for removal, disposal and box installation. The unit price shall also include restoration of ground or sidewalk to grade.

Remove Existing Junction Box: Remove Existing Junction will be measured in units of EACH (EA). The unit price shall include all labor, tools, and equipment for complete removal of junction box, and shall be full compensation for removal and disposal. The unit price shall also include restoration of ground to grade.

Remove Existing Controller Assembly: Remove Existing Controller Assembly will be measured in units of EACH (EA). Unless otherwise specified, the removal of the controller assemblies shall include the removal of the cabinet and, for base mounted cabinets, the complete removal of the concrete base. All controller assembly parts, cabinets and related equipment shall be inventoried by the Contractor using an appropriate list including identification of the model number and serial numbers of each item prior to removal. The controller assembly inventory list shall be turned over to the Traffic Engineer for retention by the City or transferred to the equipment owner.

Remove Existing Signal Head Assembly (Type): Remove Existing Signal Head Assembly will be measured in units of EACH (EA) per type of assembly (traffic 3-section, traffic 5-section, or pedestrian). The Contractor shall dismantle and remove all signal head assembly parts (Vehicular and Pedestrian) in such a manner to avoid unnecessary damage. Such removal shall include the signal head, disconnect hanger, saddle clamp, drop pipe, and all miscellaneous attachment hardware. The unit price shall include all labor, tools, and equipment, and shall be full compensation for removal and disposal.

Remove Existing Detector Assemblies: No Separate Measurement will be made for the removal of Detector Assemblies (Vehicle or Pedestrian). The price shall be included in the removal of the Cabinet or Poles.

The removal of detector assemblies shall be divided into the following categories:

1. Vehicle Detector Assemblies:

   The removal of vehicle detector assemblies shall normally include the removal of the amplifier from the controller cabinet and the under pavement loop and lead-in wiring (only when specified in the plans or Special Provisions).
   Removal of pressure type vehicle detector assemblies shall include the removal of the amplifier, detector pad and its framework in the roadway pavement. All roadway areas where such detectors have been removed shall be repaired by backfilling and tamping with an approved asphaltic concrete mix or concrete pavement mix so as to restore the roadway to the satisfaction of the Engineer.

2. Pedestrian Detector Assemblies:

   The removal of pedestrian detector assemblies shall include the removal of the push button detector, sign and all mounting hardware including the supporting post.

Remove Existing Mast Arm Assembly: Remove Existing Mast Arm Assembly will be measured in units of EACH (EA). The mast arms shall be carefully disconnected at the pole, and all useable hardware and attachment devices shall be salvaged. All devices supported by the mast arm and the wiring in the mast arm shall be removed prior to the dismantling of the mast arm, unless directed otherwise by the Engineer. For integrally installed mast arms and mast arm poles, after the devices supported by the mast arms have been removed, the pole and mast arm combination shall be removed as a unit. The unit price shall include all labor, tools, and equipment, and shall be full compensation for removal and disposal.

Remove Existing Span Wire Assembly: Remove Existing Span Wire Assembly will be measured in units of Linear Feet (LF) of span wire. The span wire shall be carefully disconnected at the strain pole, and all useable hardware and attachment devices shall be salvaged. All devices supported by the strain pole and span wire shall be removed prior to the dismantling of the span wire, unless directed otherwise by the Engineer. The unit price shall include all labor, tools, and equipment, and shall be full compensation for removal and disposal.

Remove Existing Overhead Sign Structure: Remove Existing Overhead Sign Structure will be measured in units of EACH (EA). In dismantling or removing a steel structure, all members shall be separated by the removal of pins or the cutting of rivets. Flame cutting of rivets or steel will not be permitted except by written permission. Falsework or other approved methods shall be used to support trusses during removal. All members are to be match-marked for re-erection according to an approved diagram provided by the City. The weight of each section shall not exceed 10,000 lbs. or 40 feet in length. All items of timber shall be separated piece by piece and stockpiled. Pieces of timber approximately the same dimensions shall be stored together. All bolts and nuts shall be removed and stored as directed. The Contractor will not be required to draw nails or spikes. The unit price shall include all labor, tools, and equipment, and shall be full compensation for removal and disposal.

Remove Existing Cable (Material, Type): Remove Existing Cable will be measured along the surface of the ground in a straight line along the path of the cable, from center to center of poles, pullboxes, or other terminal appurtenance with no allowance for sag, in units of linear feet (LF) per material and type of cable. Type indicates aerial or underground. The removal of existing conductor cable shall include the careful stubbing, or other appropriate protective procedure, of the remaining conductor cable and conduit at the point of removal. If the removal of any cables requires excavation, the Contractor shall be required to restore disturbed areas compatible with adjacent ground areas. Vertical segments in risers, poles, or cabinets will not be measured. Multiple cables being removed from the same conduit or pole line will be measured as a single cable for purposed of payment. Where multiple conduits exist, in a segment, payment will be made for each cable removed. No payment will be made for cable that cannot be

removed and is abandoned in place. The unit price shall include all labor, tools, and equipment, and shall be full compensation for removal and disposal.

For removal of existing communication cable (interconnect or fire alarm), the Contractor shall remove the existing interconnect cable and leave the existing messenger in place for reuse. The Contractor shall take appropriate measures to protect the messenger and hardware at locations where they are to be reused. The Contractor shall tighten and adjust down guys on cable segments where the messenger is to be reused. In order to maintain existing signal coordination, existing communication cable shall be removed only after the affected controllers have been replaced with new controllers with internal time base coordination.

Remove Existing Conduit: Remove Existing Conduit will be measured in units of Linear Feet (LF). The removal of conduit shall include the careful stubbing, or other appropriate protective procedure, of the remaining conduit at the point of removal. If the removal of any conduit requires excavation, the Contractor shall be required to restore disturbed areas compatible with adjacent ground areas. The unit price shall include all labor, tools, and equipment, and shall be full compensation for removal and disposal.

Remove and Reinstall Brick Pavers: Remove and Reinstall Brick Pavers will be measured in units of Square Yards (SY). The unit price shall include all labor, tools, materials and equipment, and shall be full compensation to properly remove, salvage, and reinstall the existing brick pavers on appropriate bedding.

Remove Existing Tree or Shrub: No Separate Measurement will be made for the complete removal of existing trees or shrubs. The price shall be incidental to other pay items.

Remove Surplus Material: No Separate Measurement will be made for the removal, hauling and disposal of all surplus material in a manner approved by the Engineer. The price shall be incidental to other pay items.

Remove Existing Traffic Signal Lamp: Remove Existing Traffic Signal Lamp will be measured in units of EACH (EA). The unit price shall include all labor, tools, materials and equipment, and shall be full compensation for proper removal of an existing incandescent lens from a traffic signal head assembly.

Relocate Existing Span Wire Signal Head Assembly (Re-Installation): Relocate Existing Span Wire Signal Head Assembly will be measured in units of EACH (EA). The unit price shall include all labor, tools, materials and equipment, and shall be full compensation for proper removal and installation.

Relocate Existing Mast Arm Street Name Sign Panel (Re-Installation): Relocate Existing Mast Arm Street Name Sign Panel will be measured in units of

EACH (EA). The unit price shall include all labor, tools, materials and equipment, and shall be full compensation for proper removal and installation.

Relocate Existing Mast Arm Traffic Sign Panel (Re-Installation): Relocate Existing Mast Arm Traffic Sign Panel will be measured in units of EACH (EA). The unit price shall include all labor, tools, materials and equipment, and shall be full compensation for proper removal and installation.

Relocate Existing Mast Arm Signal Head Assembly (3-Section Signal, Re-Installation): Relocate Existing Mast Arm Signal Head Assembly will be measured in units of EACH (EA). The unit price shall include all labor, tools, materials and equipment, and shall be full compensation for proper removal and installation.

Relocate Existing Mast Arm Signal Head Assembly (5-Section Signal, Re-Installation): Relocate Existing Mast Arm Signal Head Assembly will be measured in units of EACH (EA). The unit price shall include all labor, tools, materials and equipment, and shall be full compensation for proper removal and installation.

Relocate Existing Mast Arm Signal Head Assembly (Pedestrian Signal, Re-Installation): Relocate Existing Mast Arm Signal Head Assembly will be measured in units of EACH (EA). The unit price shall include all labor, tools, materials and equipment, and shall be full compensation for proper removal and installation.

Relocate Existing Mast Arm Pole Pedestrian Pushbutton and Sign (Re-Installation): Relocate Existing Mast Arm Pole Pedestrian Pushbutton and Sign will be measured in units of EACH (EA). The unit price shall include all labor, tools, materials and equipment, and shall be full compensation for proper removal and installation.

Relocate Existing Fiber Optic Cable: Relocate Existing Fiber Optic Cable will be measured in units of Linear Feet (LF). The unit price shall include all labor, tools, materials and equipment, and shall be full compensation for proper removal and installation.

Modify Existing Riser: Modify Existing Riser will be measured in units of EACH (EA). Modification of an existing riser shall consist of removing the existing weatherhead and furnishing and installing a sealing bushing. The sealing bushing shall be the split type that permits installation or removal without removing conductors or cables. The sealing bushing shall be the proper diameter for the riser and shall contain bushings for the specified number of fiber optic cables. The unit price shall include all labor, tools, materials and equipment, and shall be full compensation for proper modification.

Modify Existing Strain Pole: Modify Existing Strain Pole will be measured in units of EACH (EA). This work consists of modifying of an existing strain pole as shown in the details to accept the installation of a sealing bushing. Modifications include the installation of a galvanized metal conduit stub on the pole that is water tight and accommodates the sealing bushing. The stub shall be installed such that the minimum- bending radius of the fiber optic cable is not violated. The conduit stub shall be painted to match the color of the pole: green stubs shall be Federal Green No. 14062; black stubs shall be Federal Black No. 27038. The unit price shall include all labor, tools, materials and equipment, and shall be full compensation for proper modification.

Modify Existing Pole Foundation: Modify Existing Pole Foundation will be measured in units of EACH (EA). This work consists of modifying the base of an existing pole as shown in the details to accept the entrance of a new the 3" conduit into the pole, and installing a threaded conduit stub and an LB mogul to connect to the underground conduit. The conduit stub and LB mogul shall be galvanized metal. The conduit stub and mogul shall be painted to match the color of the pole. The unit price shall include all labor, tools, materials and equipment, and shall be full compensation for proper modification.

Modify Existing Cabinet Foundation: Modify Existing Cabinet Foundation will be measured in units of EACH (EA). This work consists of modifying an existing cabinet foundation by installing a new 3" conduit entrance to leave a minimum 2" stub (bell end) above the existing foundation. The conduit shall be connected to the new conduit being installed. The unit price shall include all labor, tools, materials and equipment, and shall be full compensation for proper modification.

Modify Existing Pole-Mounted Cabinet: Modify Existing Pole-Mounted Cabinet will be measured in units of EACH (EA). This work consists of modifying an existing pole mounted cabinet to include additional conduit entrances, moguls, and other hardware and fittings required to connect new risers to existing cabinets. The unit price shall include all labor, tools, materials and equipment, and shall be full compensation for proper modification.

Modify Existing Cabinet: Modify Existing Cabinet will be measured in units of EACH (EA). This work consists of removing the existing controller; furnishing and installing a new type 170 controller and a NEMA to 170 converter assembly as per Section 703 of these Specifications; and modifying an existing NEMA cabinet by wiring a 10-pin MS connector to accommodate system detectors that are being installed in an existing cabinet. The item "Modify Existing Cabinet" shall also include furnishing and installing additional harness(es), shelves, splicing and extending existing conductors (if required), and making all other necessary modifications to the NEMA cabinet to provide the operation of the NEMA/170 converter assembly. Repositioning existing equipment in a rack type cabinet shall be considered incidental to installing the new equipment. The unit

price shall include all labor, tools, materials and equipment, and shall be full compensation for proper modification.

Modify Existing Junction Box: Modify Existing Junction Box will be measured in units of EACH (EA). The unit price shall include all labor, tools, materials and equipment, and shall be full compensation for proper modification.

End of Section

SECTION 512 - MAINTAINING TRAFFIC

The work specified in this section consists of maintaining traffic within the limits of the project for the duration of the construction period, including any temporary suspensions of the work and shall conform to VDOT, Road and Bridge Specifications Sections 2007, Virginia Work Area Protection Manual, and MUTCD latest editions with the following additions.

512.03 – Procedures

(a) Signs – add the following:

All temporary construction signs must have two orange flags attached to the back of the sign.

Fluorescent prismatic lens sheeting (Diamond Grade) shall be used on all orange construction and maintenance activity signs, barrier delineators, guardrail delineators and barrier vertical panels installed in the public right-of-way.

The Contractor will be required to install "Signal Ahead" warning signs (W3-3) in advance of new traffic signal installations, in accordance with MUTCD guidelines, even when visibility distance is satisfactory.

(h) Temporary Signalization – add the following:

The temporary signal shall be a simple box span configuration where possible. The temporary signal design shall be submitted to the Engineer for review and approval. Box configuration for the signal design shall be the standard unless otherwise specified or directed by the Engineer.

Wood poles shall be properly guyed.

Minimum vertical clearance shall be 16'-6".

(l) Detour – add the following:

Where Required: The Contractor will be required to construct and maintain detour facilities wherever it becomes necessary to divert traffic from any existing roadway or bridge, or wherever construction operations block the flow of traffic.

Standards of Construction: The detours are to be planned, constructed and maintained in such a manner that they will be capable of safely carrying the traffic required in all conditions of weather. Detour signs shall indemnify the route and/or street name being detoured on separate plate.

Furnishing of Materials: The Contractor will be required to provide all materials for the construction and maintenance of all detours, except that, where the plans require the City to provide borrow or other material from these pits for the detour. Unless otherwise shown, no separate payment will be made for materials used from these pits to construct detours.
Suitable barricades shall be installed continuously along both sides of a detour where:

1) The adjacent slope is steeper than 6:l.

2) The Contractor's operations or equipment may operate within twenty (20) feet of the detour; or

3) Other unsafe conditions require them for the protection of traffic along the line of detour.

4) Detour signs shall indicate the street name and route number in which is being detoured along with the standard detour signs required.

Removal of Detours: Unless otherwise indicated in the plans, temporary detours are to be removed when no longer needed and all materials from the detour will become the property of the Contractor and are to be disposed of by him, except for materials which might be loaned to the Contractor by the City with the stipulation that they be returned.

Add the following after 512.03 (q):

(r) Maintenance of Traffic Plan

The Contractor will not be permitted to store material used for construction or erection of traffic control signs or signals on the pavement or shoulder if the street is open to public traffic. All materials shall be stored in such a manner that they will not be on the ground or come in contact with surface runoff.

The Contractor shall present his Maintenance of Traffic Plan at the pre-construction conference. The maintenance of traffic plan shall be in written form and include a minimum of four (4) full size sets of plan sheets which indicate the type and location of all signs, lights, barricades, striping and barriers to be used for the safe passage of pedestrians and vehicular traffic through the project and for the protection of the workmen. The plan will indicate conditions and setups for each phase of the Contractor's activities.

When the project plans include or specify a specific maintenance of traffic plan, alternate proposals will be considered when they are found to be equal to

or better than the plan specified. The Contractor shall be responsible for all work zone signing, delineation, pavement markings, and any other traffic control devices necessary to perform the work in accordance with these specifications or as directed by the Traffic Engineer. The Contractor shall erect, maintain, secure and move all traffic control devices in the project limits and any detour signs needed for the project. Upon completion of the work, the Contractor shall immediately remove all such temporary traffic control devices.

In no cases will the Contractor begin work until the maintenance of traffic plan has been approved in writing by the Engineer. Modifications to the maintenance of traffic plan shall also be approved in writing. Except in an emergency, no changes to the approved plan will be allowed until approval to change such plan has been received.

The Contractor shall be responsible for performing daily inspections, including weekends, and holidays, with inspections at night, of the installations. The project personnel will be advised of the schedule of these inspections and be given the opportunity to join in the inspection as is deemed necessary.

(s) Number of Traffic Lanes

Except as otherwise specified herein, on the plans, or in the special provisions, the Contractor shall maintain one lane of traffic in each direction. Two lanes of traffic in each direction shall be maintained where necessary to avoid undue traffic congestion. Unless otherwise specified, the effective width of each lane used for maintenance of traffic shall be at least as wide as the traffic lanes existing in the area prior to commencement of construction. Traffic control and warning devices shall not encroach on lanes used for maintenance of traffic.

The Contractor may be allowed to restrict traffic to one-way operation by written permission from the Traffic Engineer for short periods of time provided that adequate means of traffic control are in effect, certified flaggers are available and traffic is not unreasonably delayed.

The Contractor shall observe and obey all local and State laws, ordinances, regulations and permits in relation to the obstruction of streets and highways, keeping passageways open and detecting traffic. All roadway pavement cuts and sawcuts must be made between the hours of 9:00 a.m. and 3:00 p.m. All lanes shall be kept open to traffic at all other times. If steel plates are required or directed by the Engineer, they shall be provided by the Contractor. By special review the Contractor, at this request, may work from 6:30 p.m. to 5:00 a.m. in non-residential areas.

(t) Operations within Railroad Right-of-Way

Notification to the Railroad Company: The Contractor shall give notification to the Division Engineer or the Superintendent of the railroad company and to the City Project Engineer appropriately in advance of (minimum of 72 hours) his beginning of any operations within the limits of the railroad right-of-way. The contractor must have railroad approval before seeking approval to proceed.

Contractor's Responsibilities: The Contractor shall comply with whatever requirements and authorized representative of the railroad company deems necessary in order to safeguard the railroad's property and operations. Any damage, delay or injury and any suits, actions or claims brought on account of damages or injuries resulting from the Contractor's operations within or adjacent to railroad company right of way shall be the Contractor's responsibility.

Required Insurance: The Contractor shall furnish the railroad company with a Railroad Protective Liability Insurance Policy naming Railway as the named insured and issued to the Contractor, with a combined single limit of $2,000,000 for all damages arising out of bodily injury, death, property damage liability and physical damage to property liability per occurrence, with an aggregate limit of $6,000,000. A copy of certificate shall be forwarded to the Engineer prior to commencing work in railroad right-of-way.

(u) Maintaining Existing and Temporary Electrical Systems:

The contractor shall be responsible for the operation of all existing electrical systems (traffic signal, ramp metering, highway and street lighting, flashing beacon and sign illumination), or approved temporary replacements thereof, shall be maintained for the benefit of the traveling public during the progress of the work, except when shutdown is permitted, to allow for alterations or final removal of the systems. The traffic signal shutdowns shall be limited to periods during normal working hours, or shall be as specified in the special provisions.

The contractor shall be required to maintain all new traffic signal equipment until the final acceptance of the project. Final acceptance occurs 15 days after all punch list items are completed and signal is accepted by the City. There is no separate pay item for maintenance during construction; maintenance is simply part of the construction process.

The Contractor shall respond to emergency calls (between 4:00 PM and 8:00 AM) within 30 minutes of initial call from the Emergency Center or from the Traffic Operations Center. If the Contractor cannot, then the City will

respond and charge the Contractor for time, material and equipment costs. This requirement shall be effective from once the Contractor alters the existing traffic signal equipment or alignment to when the final acceptance letter has been received.

The local traffic enforcement agency shall be notified prior to any operational shutdown of a traffic signal.

Where an existing system or temporary system is being modified, work not shown on the plans or specified in the special provisions and which is considered by the Engineer as necessary to keep all or any part of the system in effective operation will be paid for as extra work.

Where damage is caused by the Contractor's operations, the Contractor shall, at his expense, repair or replace damaged facilities promptly in accordance with these specifications. Should the Contractor fail to perform the required repairs or replacements, the cost of performing such repairs or replacements will be deducted from any moneys due or to become due the Contractor.

The exact location of existing conduit runs and pull boxes shall be ascertained by the Contractor before using equipment that may damage such facilities or interfere with any system.

Where roadways are to remain open to traffic and existing lighting systems are to be modified, the lighting systems shall remain in operation and the final connection to the modified circuit shall be made so that the modified circuit will be in operation by nightfall of the same day.

Temporary electrical installations shall be kept in effective operation until the temporary installations are no longer required for the traveling public.

(v) Scheduling of Work

Work shall be so scheduled so that each traffic signal, highway lighting and sign illumination system shall be completed and ready for operation prior to opening the corresponding section of the roadway to traffic.

Traffic signals shall not be placed in operation until the roadways to be controlled are open to traffic, unless otherwise directed by the Engineer.

Highway lighting and traffic signals shall not be placed in operation, including flashing operation, prior to commencement of the functional test period (minimum of 48 hours) unless ordered otherwise by the Engineer.

Conductors shall not be pulled into conduit until pull boxes are set to grade, crushed rock slumps installed, mortar placed around conduit, concrete bottom of pull boxes placed, and metallic conduit bonded.
In vehicular undercrossings, lights shall be placed in operation as soon as practicable after falsework has been removed from the structure. Lighting for pedestrian structures shall be placed in operation prior to opening the structure to pedestrian traffic.

(w) Safety Precautions

Before starting work on existing series street lighting circuits, the Contractor shall obtain a safety circuit clearance from the serving utility. By-pass switch plugs shall be pulled and "Men at Work" signs posted at switch boxes before any work is done.

(x) Cutting and Replacing

When it is necessary to disturb existing portland cement concrete pavement for the installation of vehicle detectors, underground wiring, poles or any equipment, a concrete saw shall be used to cut the pavement to a minimum depth of three inches or as otherwise specified. All replacements of pavement, curb and gutter or sidewalk shall be with Class A3 concrete in accordance with the applicable sections of the standard specifications. Sidewalk replacements shall be along existing joint lines.

(y) Serving Utility Companies

The Contractor shall be responsible for all negotiations with and between the utility companies. The Contractor shall assume all charges and make all necessary arrangements with the power company for the required electrical services necessary for the energizing of the traffic signal installations. The Contractor shall comply with the utility company regulations.

(z) Tests/Final Acceptance:

During all tests and final inspection, the City representative of the equipment/material manufacturer shall be present.
Acceptance of the completed project shall be based upon the following requirements and shall not be considered final until thirty (30) days of trouble-free operation (no service calls, manual resets, etc.) after the final inspection has elapsed. The trial period shall begin after any problems have been rectified that were noted during the final inspection. In the event any portion of the signal system is replaced or repaired, that portion of the signal system shall be subjected to a thirty (30) day demonstration period.

512.04 – Measurement and Payment

Dynamic Message Sign: Dynamic Message Sign will be measured in units of Hours (HR) of actual use, as required by the approved Maintenance of Traffic Plan. The unit price shall include all labor, tools, materials, equipment, maintenance and any shipping costs, and shall be full compensation.

Police Officer: Police Officer will be measured in units of Hours (HR) as authorized or approved by the Owner, except when used for the Contractor's convenience. The unit price shall include all labor and safety equipment necessary to perform flagger service.

Maintenance of Traffic Plan: No separate measurement will be made for the Maintenance of Traffic Plan. The price for plan development and submittal shall be included in the maintenance of traffic pay items.

Furnish Portable Temporary Signal Trailer: will be paid for as Each (EA) basis. This price shall include portable temporary traffic signal trailer equipment; installation; energy source; and maintaining, adjusting, aligning, removing, and relocating equipment.

Temporary Signalization: Temporary Signalization will be measured in units of Lump Sum (LS), from connection point to connection point for the standard installation. This price shall include, but not be limited to, poles, messenger cable, tether wire, signals, conduit, signal cable, loop detectors, saw cutting of pavement, electrical service, control cabinet, brackets, disconnects, adjustable hangers, maintaining adjusting and aligning equipment, pipe, removing and delivering equipment, all necessary clamps and hardware, tools, equipment, labor and incidentals to install the temporary signalization. This price shall also include maintaining existing and temporary electrical systems, tests/final acceptance, and restoration of work areas upon temporary signalization removal. Removal of temporary signalization shall be included in the lump sum price for temporary signalization and shall not be removed until directed by the Traffic Engineer.

Group 1 Channelizing Device: Group 1 Channelizing Device will be measured in units of Each (EA) per Day. When Group 1 Channelizing Devices are moved to a new location or are removed and reinstalled at the same location, they will be measured for separate payment. However, when Group 1 Channelizing Devices are moved from one lane to another by simply moving the devices along the lane edge line without removal from the roadway, no additional payment will be made. The unit price shall include all furnishing devices, maintaining devices, and removing devices when no longer required and signs.

Group 2 Channelizing Device: Group 2 Channelizing Device will be measured in units of Each (EA) per Day. When Group 2 Channelizing Devices are moved to a

new location or are removed and reinstalled at the same location, they will be measured for separate payment. However, when Group 2 Channelizing Devices are moved from one lane to another by simply moving the devices along the lane edge line without removal from the roadway, no additional payment will be made. The unit price shall include all furnishing devices, maintaining devices, and removing devices when no longer required and signs.

End of Section

SECTION 513 - MOBILIZATION

VDOT Road and Bridge Specifications, 2007 Edition, shall be followed unless otherwise amended or supplemented with the specifications contained herein. Where conflicts occur, the specifications contained herein shall prevail.

513.02 – Measurement and Payment

Replace Section 513.02 – Measurement and Payment with the following:

Mobilization and demobilization shall not be measured and paid for separately; it shall be considered incidental to other pay items.

End of Section

SECTION 700 – GENERAL TRAFFIC CONTROL DEVICES

VDOT Road and Bridge Specifications, 2007 Edition, shall be followed unless otherwise amended or supplemented with the specifications contained herein. Where conflicts occur, the specifications contained herein shall prevail.

700.02– Material – is amended as follows**:**

(i) 4. **Sign Post** - replace with the following:

1) Sign Post shall be metal break-away as listed below. The post shall be rolled or formed sections of the dimensions specified. All sharp corners shall be rounded and rough or burred parts shall be smoothly dressed.

a) 2-inch square tube post

b) 2 ¼ - inch square tube post

c) 2 3/16-inch square tube post

d) 2 ½ - inch square tube post

2) Sign Posts: The 2-inch square tube posts shall be 14-gauge steel conforming to the ASTM A570, Grade 50 for steel post. Steel post shall be galvanized in accordance with AASHTO M-120, followed by a chromate conversion coating and a clear organic polymer topcoat. Both the interior and the exterior of the post shall be galvanized. Manufactured by Allied Tube and Conduit, Inc. Qwik-Punch® or approved equal.

The 2 ¼- inch square tube posts shall be 12-gauge steel conforming to the ASTM A570, Grade 50 for steel post. Steel post shall be galvanized in accordance with AASHTO M-120, followed by a chromate conversion coating and a clear organic polymer topcoat. Both the interior and the exterior of the post shall be galvanized. Manufactured by Allied Tube and Conduit, Inc. or approved equal.

The 2 3/16 - inch square tube posts shall be 10-gauge steel conforming to the ASTM A570, Grade 50 for steel post. Steel post shall be galvanized in accordance with AASHTO M-120, followed by a chromate conversion coating and a clear organic polymer topcoat. Both the interior and the exterior of the post shall be galvanized. Manufactured by Allied Tube and Conduit, Inc. or approved equal.

The 2 ½ - inch square tube posts shall be 10-gauge steel conforming to the ASTM A570, Grade 50 for steel post. Steel post shall be galvanized in accordance with AASHTO M-120, followed by a chromate conversion coating and a clear organic polymer topcoat. Both the interior and the exterior of the post shall be galvanized. Manufactured by Allied Tube and Conduit, Inc. or approved equal.

Sign post design shall conform to the requirements of the AASHTO *Standard Specifications for Structural Supports for Highway Signs, Luminaires, and Traffic Signals* (latest approved edition).

The hardware posts and anchors shall be designed and installed in compliance with the manufacturer's installation guidelines to the FHWA breakaway standards.

When specified on the plans, the post shall be powder coated green to match Federal Standard 595B Color Number 14062 or shall be powder coated black to match Federal Standard 595B Color Number 17038. The finish coating shall be a six stage chemical treatment for an electrostatic applied fusion bonded polyester powder coating. The polyester protective coating shall be one coat (minimum 4 mils dry film thickness or in accordance with manufacturer's specifications), and heat curable, thermosetting powdered coating. The polyester coating shall be checked for continuity using 67-1/2 volt wet sponge detector to check for holidays, pinholes and discontinuities. Coating shall be checked and certified.

3) Bolt holes: The 2-inch square tube posts shall have die punched knockouts. Knockout diameter shall be 7/16-inch pre-punched holes spaced 1 inch center to center (+/- 1/64 inch) beginning 1 inch from the top and extending the full length of the post, on all four sides for the entire length of the post. Knockouts shall be on the center line of each side in true alignment and opposite of each other. Field punched holes will not be permitted.

   The 2 ½ , 2 ¼ and 2 3/16 - inch square tube posts shall have bolt holes that are pre-punched. The holes shall be 7/16-inch in diameter on 1-inch centers on all four sides down the entire length of the post. Field punched holes will not be permitted.

4) Length: The length shall be necessary for the type and location of installation. The ends of the post shall be tampered for easy installation.

5) Procedures & Packaging: Posts shall be bundled in groups of 25 or less, should not be over 2000 lbs., and shall conform to VDOT Section 106.

Add the following after (l):

(m) <u>Anchor Base</u> - Shall be 30-inch section of 12-gauge square tubing installed per manufacturer specifications for the post size specified on the plans including use

of Corner Bolt fasteners, manufactured by Allied Tube and Conduit, Inc. or approved equal.

(n) Anchor Sleeve – Shall meet manufacturer specifications for stabilization anchor sleeve, manufactured by Allied Tube and Conduit, Inc. or approved equal.

(o) Slip Base – Shall meet manufacturer specifications for slip base, manufactured by Xcessories Squared or approved equal.

(p) Concrete Footing – Footing shall be concrete Class A3. Sign post footing size shall be minimum 1 feet wide by 2 feet deep.

700.05 – Measurement and Payment – replace the following**:**

Sign Posts – replace entire paragraph with the following:

Furnish Sign Post will be measured and paid for in units of linear feet of sign post for the size and finish specified. This price shall include post, top cap and clamps for installation by City forces. This price does not include sign panel, anchor sleeve, anchor base, slip base or concrete footing.

Install Sign Post will be measured and paid for in units of linear feet of sign post for the size specified (including post, top cap, clamps) provided by the City of Norfolk. This price shall include labor, tools, equipment, and incidentals necessary to complete the installation. This price does not include sign panel, anchor sleeve, anchor base, slip base or concrete footing.

Furnish and Install Sign Post will be measured and paid for in units of linear feet of sign post for the size and finish specified. This price shall include post, top cap and clamps, as well as all labor, tools, equipment, and incidentals necessary to complete the installation. This price does not include sign panel, anchor sleeve, anchor base, slip base or concrete footing.

Add the following to the end:

Anchor Base:

Furnish and Install Anchor Base will be measured and paid for in units of Each (EA) for the post size specified on the plans. This price shall include all materials, labor, tools, equipment and incidentals necessary to complete the installation.

Anchor Sleeve:

Furnish and Install Anchor Sleeve will be measured and paid for in units of Each (EA) for the post size specified on the plans. This price shall include all materials, labor, tools, equipment and incidentals necessary to complete the installation.

Slip Base:

Furnish and Install Slip Base will be measured and paid for in units of Each (EA). This price shall include all materials, labor, tools, equipment and incidentals necessary to complete the installation.

Concrete Footing:

Furnish and Install Concrete Footing will be measured and paid for in units of Cubic Yards (CY) of concrete. This price shall include all materials, tools, labor, equipment and incidentals necessary for a complete and accepted installation.

End of Section

SECTION 701 –TRAFFIC SIGNS

VDOT Road and Bridge Specifications, 2007 Edition, shall be followed unless otherwise amended or supplemented with the specifications contained herein. Where conflicts occur, the specifications contained herein shall prevail.

701.02 – Materials – Replace with the following**:**

Traffic Sign:

l) Sign Face – Face material shall conform to VDOT Section 247 (Reflective Sheeting) and be 3M™ Diamond Grade™ DG^3 Reflective Sheeting Series 4000 material or equal for all signs.

2) Aluminum Blank - shall conform to VDOT Section 701.

3) Sign Backing – When specified on the plans, the back of the sign blank shall have colored sheeting applied. The pressure sensitive Green color sheet shall be #3877, manufactured by 3M™ Product or equal; the pressure sensitive Black color sheet shall be #7725-12, manufactured by 3M™ Product or equal.

4) Ground Mounted Installation: shall conform to VDOT Std. SSP-VA and include the following materials:

a. Posts - shall conform to Section 700 of these specifications.

b. Anchor Sleeve - shall conform to Section 700 of these specifications.

c. Anchor Base - shall conform to Section 700 of these specifications.

d. Slip Base - shall conform to Section 700 of these specifications.

e. Concrete Footing - shall conform to Section 700 of these specifications.

f. Banding Hardware – For banding applications, C – BRACKET shall utilize “SIGN FIX”, PART # BC12118UNC. Banding material shall be “BANDIT” - ¾” X 100 FT. ROLL - 0.030 STAINLESS STEEL, PART # C20699, with “BANDIT’” EAR – LOKT…PART # C25699 or approved equal. When color post is required, all hardware shall be powder coated conforming to Section 700 of these specifications.

g. Universal Channel Clamp - MACM – 120 ALUMINUM 12FT SECTION MEDIUM EXTRUDED CHANNEL MFG. BY SIGN FIX UNIVERSAL CHANNEL CLAMP…PART # UCC0004 or approved equal. When color posts are required, all hardware shall be powder coated conforming to Section 700 of these specifications.

h. Bracing – Shall be 6061-T6 aluminum alloy and have 2-inch mounting surface x 7/8-inch depth x 1/8-inch nominal wall thickness, punched with 7/32-inch diameter holes on 6-inch centers along centerline of 2-inch mounting surface. Sign cluster layout shall conform to MUTCD guidelines.

i. Fastener - Drive rivets shall be utilized to fasten the signs to the post. Plastic nylon washer shall be placed between the sign face and rivet head.

j. Wooden Utility Pole Installations – Signs mounted to wood poles shall utilize 3½-inch galvanized metal lag screws with nylon washer placed between the sign face and screw head.

k. Sign & Sign Post Inventory ID Label Installation – A sign inventory identification label shall be provided by the City to the Contractor. The self-adhesive label shall be applied to the back of each sign and each post, and noted on the Daily Work Log (see Section 100 – General Requirements).

5) Mast Arm Installation: Sign assemblies installed on mast arms shall utilize Pelco overhead sign bracket AB-0128-A-L mounting kits or approved equal. Sign assembly brackets shall be made of aluminum pipe not smaller than 1½ inches in diameter with suitable sockets at each end.

a. Metro Street Name Sign: assemblies installed on mast arms shall be installed per the detail drawing of these specifications in the Appendix.

701.03 – Procedures – Add the following after (d)**:**

(e) Vertical distance between the bottom of the lowest sign on a sign post and the ground line is a minimum of 7 feet.

701.04 – Measurement and Payment – Delete and replace with the following**:**

Traffic Signs:

Furnish Traffic Sign will be measured and paid for in units of Square Feet (SF) of sign panel for the types specified on the plans. This price shall include fabrication of sign face, aluminum blank, sign layout (if sign cluster) and bracing for installation by City forces. This price does not include sign post, anchor base, anchor sleeve, slip base or concrete footing. Sign cluster layout shall conform to MUTCD guidelines and sign cluster detail shall be submitted to the City of Norfolk for approval prior to furnishing.

Install Traffic Sign will be measured and paid for in units of Square Feet (SF) of sign panel provided by the City of Norfolk for ground-mounting. This price shall include hardware, clamps, bracing, ID labels and fasteners, as well as labor, tools, equipment, and incidentals necessary to install a traffic sign panel or cluster to a ground-mounted post or pole.

Furnish and Install Traffic Sign will be measured and paid for in units of Square Feet (SF) of sign panel for the ground-mounted types specified on the plans. This price shall include fabrication of sign face, aluminum blank, sign layout (if sign cluster), hardware, clamps, bracing, ID labels and fasteners, as well as all labor, tools, equipment and incidentals necessary to complete the installation. This price does not include sign post, anchor base, anchor sleeve, slip base or concrete footing. Sign cluster layout shall conform to MUTCD guidelines and sign cluster detail shall be submitted to the City of Norfolk for approval prior to installation.

Furnish and Install Traffic Sign Assembly (Mast Arm Installation): Traffic sign assemblies that are mast arm installations shall include furnishing, installing, and fabricating the sign face, tools, equipment, mounting brackets, hardware, aluminum blank, labor, tools, equipment and incidentals necessary for a complete and accepted mast arm installation of traffic sign assembly.

Furnish and Install Traffic Sign Assembly (Span Wire Installation): Traffic sign assemblies that are span wire installations shall include furnishing, installing, and fabricating the sign face, tools, equipment, brackets, adjustable hangers, clamps, hardware, labor, tools, equipment and incidentals necessary for a complete and accepted span wire installation of traffic sign assembly.

End of Section

SECTION 703 – NORFOLK TRAFFIC CONTROLLER ASSEMBLY

Section 703 – Traffic Signals of the VDOT Road and Bridge Specifications, 2007 Edition, shall be deleted in its entirety and replaced with the specifications contained herein.

703.01-Description

This work shall consist of furnishing and installing traffic signal equipment in accordance with these specifications and as shown on the plans or as directed by the Engineer.

703.02-Equipment

A. Type 2070E Traffic Controller Assembly:

The purpose of this specification is to describe the minimum acceptable design and operating requirements for solid state, two through eight-phase controller assembly. All equipment furnished herein shall be in accordance with the Traffic Signal Control Equipment Specifications, as published by the latest State of California Business, Transportation and Housing Agency; Department of Transportation and all current Addendum for the Model 2070E controller unit and the following Special Provisions. In case of conflict, these Special Provisions shall take precedence over all other specifications. All Traffic Controller Assembly equipment must be listed in the State of California "Qualified Product List, Controller Assemblies for Model 2070E Traffic Controller" dated March 25, 2014. The qualified product list is located under http://www.dot.ca.gov/hq/traffops/tech/qpl/tees_qpl.pdf. The controller and cabinet rack must be manufactured by the same manufacturer.

1. These special provisions define the work and materials necessary to provide traffic signal control equipment for the City of Norfolk.

2. This procurement is intended to provide the City with the Model 2070E System and its various components including all hardware.

3. Each Traffic Controller Assembly to be furnished shall consist of all necessary quantities from the following items, or as specified per bid document:

Item	336L Stretch Cabinet	332L/332L Stretch Cabinet
Traffic Signal Controller –**2070E**	1	1
2070-1E CPU Module	1	1
2070-2E Field I/O Module	1	1
2070-3B LCD/Front Panel Module	1	1
2070-4A Power Supply Module, 10AMP	1	1
2070-7A Serial Communications Module	1	1
Ethernet Ports: 4 auto-sensing 100Mb with Link/Activity LEDs	1	1
Model 336L Stretch or Model 332L/332L Stretch Base Mounted Cabinet Assembly	1	1
Base Extension	1	1
Load Relay	12	12/16
DC Isolator	4	4
Loop Detector – EDI Oracle 2E Series – Dual Channel	4 – 2CH	14 – 2CH
Conflict Monitor	1	1
Flash Relay	2	2
Flash Transfer Relay	4	4
Power Supply	1	1
# EDI Model 206 L Power Supply	1	1
Fiber Optic Interconnect Center	1	1
Emergency Priority System Optical Detector	2 – 2CH	2 – 2CH
Video Detection Video Processor Board	2 – 2CH	2 – 2CH

4. To assure full and complete utilization of all equipment furnished, the Successful Bidder shall provide support services and materials, which shall include, but not be limited to, furnishing complete equipment documentation, warranties, and training.

B. Enclosed Equipment:

1. Related Specifications and Standards

All equipment furnished shall be new and shall conform to the plans, Special Provisions, Specifications, and to the applicable requirements of the Underwriter's Laboratory Incorporated (UL), the Electronics Industries Association (EIA), the National Electric Code (NEC), the American Society for Testing and Materials (ASTM), the American National Standards Institute (ANSI), and the applicable standards, specifications, and regulations of the City of Norfolk.

2. 2070E Modules and Controller

Controller shall conform to CALTRANS *Transportation Electrical Equipment Specifications* (TEES) (dated March 12, 2009, including Errata 1 dated January , 2010.

2070E CPU Module and controller shall be furnished and installed to upgrade existing intersections to a modern, high performance platform by replacing existing controllers with each assembly and compatible with the City of Norfolk's ATMS computerized traffic control system and compatible with the Quicnet Pro v2.0 software. McCain 2033 intersection control software shall be provided and installed. Manufactures other than McCain shall provide references of implementation with McCain 233 MC1 software.

The 2070 controller shall be capable of being converted to an ATC controller with only the change of the CPU Module. The ATC CPU Module will have a fully licensed current version of McCain's Omni eX ATC software. Manufactures other than McCain shall provide references of full and complete integration with McCain QuicNet Pro central software and Omni eX ATC software.

a. DESCRIPTION: The McCain Manufacturer (or other company equivalent) 2070E controller and Module shall be interchangeable with Standard 170 Cabinet without the need to replace cabinet hardware or adaptors and compatible with the latest CALTRANS Transportation Electrical Equipment Specification (TEES).

b. HARDWARE FEATURES:
   1) Operating System: OS-9 RTOS;
   2) Microprocessors:
      CPU Module - Freescale MC68EN360, 32 Bit, 24.576MHz microprocessor or equivalent;
      I/O Module – Freescale microprocessor, running at 24MHz or equivalent;
   3) Memory: 8 MB Flash Memory, 32MB PSRAM and 2MB Non-volatile SRAM.

c. CONTROLLER INTERFACES:
   1) Communication Interfaces:
      Dual RS232 Serial PortsEthernet Ports: 4 auto-sensing 100Mb with Link/Activity LEDs.
   2) Front panel interface:
      Display: Small Font LCD Panel Module 8 lines x 40 characters,
      Keyboard: 3 x 4 navigation and 4 x 4 data entry keypads. Front connector C50J
   3) Cabinet interfaces:
      Rear connectors C1S, C11S, C12S, C13S, C14S, C21S, C22S.

d. GENERAL SPECIFICATIONS

Dimensions:	7"H x 19"W x 13"D
Power:	89VAC to 135 VAC, 60 Hz
Operating Temp.:	-37°C to +74°C

Warranty:

2070E Module and controller must be warranted against defects in materials and workmanship for a period of two (2) years from date of original shipment.

3. Conflict Monitor

See Section 703.02 F.

4. Fiber Optic Interconnect Center

See Section 711. Note: When Battery Back-up System (BBS) cabinet is installed with a project, the fiber optic interconnect center shall be housed in the BBS (Section 890).

5. Emergency Priority System Optical Detector

See Section 810.

6. Video Detection Video Processor Board

See Section 820.

7. Ethernet Switch

See Section 835. Note: When Battery Back-up System (BBS) cabinet is installed with a project, the Ethernet Switch shall be housed in the BBS (Section 890).

C. Cabinet, Model 336L Stretch:

1. General

The cabinet assembly shall be a model 336L Stretch cabinet, with all components as described in the specifications.

2. Cabinet Finish

TYPE A. The cabinet shall have a standard aluminum finish if not specified on plans or special provisions.

TYPE B Green

Painted finishes shall conform to the requirements as specified in the contract plans and specifications according to the following:

a. All components, nuts, bolts, screws shall have shop painted finish coat.

b. The color shall be City of Norfolk "Federal Green", Federal Standard Colors No. 14062, Federal Standard 595B.

c. The finish coating shall be a six stage chemical treatment for an electrostatic applied fusion bonded polyester powder coating. The polyester protective coating shall be one coat, minimum 4 mils thick, and heat curable, thermosetting powdered coating.

d. The polyester coating shall be checked for continuity using 67-1/2 volt wet sponge detector to check for holidays, pinholes and discontinuities. Coating shall be checked and certified.

TYPE C Black

Painted finishes shall conform to the requirements as specified in the contract plans and specifications according to the following:

a. All components, nuts, bolts, screws shall have shop painted finish coat.

b. The color shall be City of Norfolk “Black”, Color Number FS 27038, Federal Standard 595B.

c. The finish coating shall be a six stage chemical treatment for an electrostatic applied fusion bonded polyester powder coating. The polyester protective coating shall be one coat, minimum 4 mils thick, and heat curable, thermosetting powdered coating.

e. The polyester coating shall be checked for continuity using 67-1/2 volt wet sponge detector to check for holidays, pinholes and discontinuities. Coating shall be checked and certified.

3. Cabinet Door, Locks and Lifting Rings

The cabinet shall have air filters and vents on both front and rear doors. The cabinet shall have door locks (Corbin Norfolk B4R97849 lock) and lifting eyes attached to the side of cabinet.

4. Cabinet Light

Equivalent to LEOTEK – LED Traffic Cabinet Light CL Series. Each cabinet shall include two (2) LED lighting fixture (one front, one back) mounted horizontally

inside the top portion of the cabinet. The fixtures shall include a bright white LED, lamp cover and shall be operated by a normal power factor UL listed ballast. A door-actuated switch shall be installed to turn on the applicable cabinet light when the front door or back door is opened.

5. Cabinet Fans

Two (2) cabinet muffin fans wired in parallel with one (1) thermostat specification of fan to meet TEES spec with the addition of second fan. Fans shall expel heat from the cabinet.

6. DB9 RS232 Serial Null Modem Cable Female to Male: Controller to PC

a. Cable

Cable must be 5 feet in length

7. No Mercury Contactor Relays

CALTRAN's TEES dated March 2009 line 3.5.4 states that: FAILED State Output Circuits An electro-mechanical relay shall be provided to switch an output circuit during a FAILED state. The relay coil shall be energized in a NON FAILED State. The relay contacts shall be rated for a minimum of 3 amperes at 120 VAC and 100,000 operations. Contact opening/closing time shall be 30 ms or less. This specification is amended to state that the relay is not required to be electro-mechanical but must not be of the mercury contactor type.

8. Surge Protection for Control Equipment

Each cabinet shall be provided with devices to protect the control equipment from surges and over voltages.

9. AC Service Inputs

Each controller cabinet shall be provided with a hybrid type power line surge protection device. The protector shall be mounted on the bottom right hand side of the cabinet. Approximately 5" left of main service block and centered between the bottom of the input file and the bottom of the rack chassis. The protector shall include the following features and functions:

10. AC Service Surge Arrestor

a. General

Peak Surge Current: 80 kA per phase; 40 kA mode

Description: Series wired, terminal strip connected, multi-stage hybrid Active Tracking Network **(ATN)** sine wave tracking surge protective device with remote alarm capability and 2 pair (RJ14) telecommunication circuit protection

Warranty: Ten-Year Free Replacement

Unit Listing: Recognized components under UL1449 Second Edition, UL1283, Tele-communications circuit UL497A, CSA

Manufacturer Qualifications: ISO 9001:1994 Quality System Certification BSI FM 30833

b. Mechanical

Enclosure: ABS Plastic UL94-5VA

Connection: Wire clamping box terminals on 30 Amp models; Stud-lugs on 60 Amp models

Weight: 30 Amp Models ~ 2lb (9kg); 60 Amp Models ~ 3 lb (1.5 kg)

Operating Temperature: 40º F (-40 º C) TO +140 º F (+60 º C)

c. Electrical / Performance

Application: Dedicated 120 Vrms 1 AC power circuits operating at <60 Amps, protecting all types of traffic signal cabinets (both NEMA and 170 types), school flashers, hazard beacons, preemption systems, and variable message signs

Protection Modes: All mode: l-N (normal mode), L-G (common mode)

Input Power Frequency: 47-64 Hz (AC)

Response Time: AC – Active <1 nanosecond

Maximum EMI/RFI Attenuation – Mil-Std-220

1 kHz	**10 kHz**	**100 kHz**	**1MHz**	**10 MHz**	**Maximum Attenuation Frequency**
3.0dB	**21 dB**	**38 dB**	**36 dB**	**15dB**	**47 dB @ MHZ**

Maximum Continuous Operating Current: 30 Amps or 60 Amps

Diagnostics: AC only, Form C (N/O, N/C) Dry Relay (volt Free) contacts rated at 1 AMP @ 30 VDC, .5 AMP@ 125 VAC

Short Circuit Current Rating: 200 k AIC with 30 AMP or 60 Amp Class R Fuse

d. Telecom Electrical / Performance

Application: Modular jacks are: RJ11 (1 pair) or RJ14 (2pair). Compatible with standard voice grade lines including ISDN**Protection Modes:** All mode: Normal/Transverse – tip to ring, Common/Longitudinal – tip to ring & ring to ground
Frequency Range: 0-16 MHz
Series Resistance: ~ 10 ohms
Data Rate: <1.6 Mbps
UL Listing: UL497A
Continuous Current Maximum: 100 mA
Pairs Protected: (1-4) (203)
Response Time: <1 nanosecond
EMI/RFI Attenuation: 3dB point 17 MHz, max attenuation 39 dB @ 38 MHz
Maximum Continuous Operating Voltage: 127 Vrms tip to ring, tip & ring ground

Available Models	**Maximum Continuous Operating Voltage (VRMS)**	**ANSI/IEEE C62.41-1991 Measured Limiting Voltage***				**ULSVR**
		L-N L-G, N-G	L-N L-G, N-G	L-N L-G, N-G	L-N L-G, N-G	L-N L-G, N-G
		A1 Ring Wave 2kV, 67 A 180 Phs Angle	**A1 Ring Wave 2 kV, 67 A 90 Phs Angle**	**B3/C1 Impulse Wave 6 kV, 3kA 90 Phs Angle**	**C3 Impulse Wave 20 kV, 10 kA 90 Phs Angle**	**UL 1499-2 Suppressed Voltage Ratings**
Tracker -2 (60 A)	150 150, 150	30 80, 40	190 240, 50	420 450, 430	520 660, 560	400 400, 400

*Test environment: Positive polarity. Tested with AC power applied. All units tested at terminals, time base = 1 ms, All Measurements referenced from zero volts per NEMA lS-1

Telecom	Maximum Continuous Operating Voltage (Vrms)	IEC 801-5 10 x 700 ps Telecommunications Wave From*			
		500 V 25 ohm	**1000 V 25 ohm**	**2000 V 25 ohm**	**4000 V 25 ohm**
		L-G L-L	L-G L-L	L-G L-L	L-F L-L
RJ-14	127 V	170 170	170 170	170 170	170 170

11. Remote Detector Input (As required by Plan Sheets)

Each remote detector input line shall be protected as it enters the cabinet with a surge protection device that meets or exceeds the following requirements:

a. The unit shall be a 3-electrode gas tube type of surge arrester.

b. The striking voltage shall be 300-500 VDC with a minimum holder over voltage of 155 VDC.

c. The unit shall be a three terminal device, one of which shall be connected to ground, the other two shall be connected across each input respectively.

d. The unit shall have the following minimum requirements:

- Impulse Breakdown: less than 100v in less than 1.1 microsecond at 10 KV/usec.
- Impulse Breakdown Balance: 0.01 microsecond (or less) difference at 10 KV/usec impulse.
- Energy Application: withstands 20 amp AC for 1 sec applied 10 times at 3 minute intervals on either section.
- Current Rating: 40,000 amp (8/20 impulse)
- Capacitance: 6 picofarads, line to ground

12. Inductive Loop Detector Inputs

a. Each inductive loop detector channel input (minimum of 16 channels) shall be protected by an external surge protection device, mounted on a separate fold down detector panel, meeting or exceeding the following requirements:

b. The unit shall be a three-terminal device, two of which shall be connected across the signal inputs of the detector. The third terminal shall be connected to chassis ground to protect against common mode damage.

c. The unit shall instantly clamp differential mode surges (induced voltage across the loop detector input terminals) via a semi-conductor array. The array shall be designed to appear as a very low capacitance to the detector.

d. The unit shall clamp common mode surges (induced voltage between the loop leads and ground) via solid state clamping devices.

e. The unit shall have the following minimum requirements:

- Peak Surge Current (six times)
- Differential Mode.....400 Amps (8x20us)
- Common Mode.....5000 Amps (8x20us)
- Estimated Occurrences...500 @ 200 Amps
- Response Time.....40 ns
- Input Capacitance.....35 pf typical
- Temperature.....- 40° C to + 85° C
- Mounting.....No. 10-32 x 3/8" Bolt
- Clamp Voltage .....@ 400 Amps
- Diff. Mode.....30 volts max @ 1000 Amps
- Comm. mode.....30 volts max.

13. Police Panel

In addition to the Flash/Automatic switch a Manual Control switch and a hard wired police push button (Switchcraft Type 921K) with a minimum 6 foot length cord shall also be furnished.

The panel shall have a minimum depth of 2.25 inches. No miniature switches will be allowed. All switches must be clearly labeled.

There shall be **NO** Signal On/Off switch installed within the Police Panel.

14. Input File

Shall be City of Norfolk Standards as per Figure 1 "Input File City of Norfolk Standard 336L Stretch Cabinet".

a. All rear wire labels shall be viewable/readable without the need to move wire.

b. The file shall have a full complement of 2-Channel detectors and five 242 DC and three 252 AC isolators.

15. Output File

The output file shall be hand wired. No printed circuit boards will be allowed.

Surge protection shall not be soldered, shall be of a 'plug-in' type easily replaceable.

16. Shelf Drawer

Shelf drawer assembly per the New York Specification (*California/New York Type 170, Traffic Signal Controller System – Hardware Specification, U.S. Department of Transportation, Publication FHWA – IP – 78 – 16, Dec 1978*) with non-slip surface and side stop latch shall be furnished.

a. PC Interface Port and Cable

An interface port and cable shall be installed in the Shelf Drawer to permit a computer or similar device to communicate with the 2070 Controller. The PC to 2070 interface cable shall be furnished with the Shelf Drawer which plugs into the C22S connector in the rear of the controller. A female DB9 plug shall be mounted to the front face of the Shelf Drawer allowing connection to a computer without opening the drawer and long enough to allow the drawer to slide out completely. The cable shall be made to prohibit it from binding or crimping on other devices in the cabinet. Below is a diagram of the pin out arrangement.

DB9 **FEMALE** CONNECTOR (Shelf Side)		DB9 MALE CONNECTOR (Controller Side)
2 (Rx in)	----------	3 (Tx out)
3 (Tx out)	----------	2 (Rx in)
5 (GND)	----------	5 (GND)

17. DIN Rail

Din rail shall be furnished to provide mounting of the Ethernet Switch. The rail shall be mounted to the upper right side (facing from the rear door) of the cabinet onto the side panel mounted to the frame. The rail shall be mounted so that the Ethernet Switch does not interfere with any cable connections at the rear of the 2070E controller.

18. Connector C1 Wiring Harness

The C1 connector shall be fully wired with all unused wires clearly labeled and terminated on a spare terminal block for future applications (spare terminal block 'TB-X' approximately 10 inches from the bottom rear left side of the cabinet).

19. C5 Connector

A C5 Connector shall be furnished fully wired with remaining pins for future use.

20. Extension Base

A twelve inch (12”) base extension shall be provided to extend the height of the cabinet when the cabinet is installed on a foundation.

21. Adapter Base

When stipulated on the plans, a twelve inch (12") high "M" base adapter base shall be provided to extend the height of the cabinet when the cabinet is installed on an existing NEMA cabinet foundation.

22. 120 VAC Receptacles (non-GCFI)

Each controller cabinet shall be provided with a power strip consisting of eight (8) 15A-125V; 2-Pole, 3-Wire receptacles. The power strip shall be mounted so not to interfere with the input/output drop down back panels. The strip can be mounted (bolted/ or with mounting screws) either on the left or right of the rear of the cabinet where it will not interfere with existing terminal blocks. The power strip shall be wired directly, un-fused, from the AC service input terminal block.

FIGURE 1 - CITY OF NORFOLK
STANDARD MODEL 336L Stretch CABINET
INPUT FILE

g 1 56 E, CT	g 2 39 E, CT	g 3 58 E, CT	g 4 41 E, CT	g 5 55 E, CT	g 6 40 E, CT	g 7 57 E, CT	g 8 42 E, CT	RR1 51	EVA 71	EVB 72	2 PED 67	6 PED 68	FLH
2 Call 47	g 2 43 E, CT	4 Call 49	g 4 45 E, CT	6 Call 48	g 6 44 E, CT	8 Call 50	g 8 46 E, CT	RR2 52	EVC 73	EVD 74	4 PED 69	8 PED 70	STOP TIME
1	2	3	4	5	6	7	8	9	10	11	12	13	14

LEGEND
g - Phase
56 - Connector C1 Pin
E - Extension
SYS - System Sensor
CT - Count
SF - Special Function
FLH - Flash Sense
RR - Railroad Pre-emption
EV - Emergency Vehicle
PED - Pedestrian Push Button

D. Cabinet, Model 332L

1. General

   The Cabinet Assembly shall be a Model 332L cabinet, with all components as described in the Specifications.

2. Cabinet Finish: same as 336L Stretch Cabinet

3. Cabinet Door, Locks and Lifting Rings: same as 336L Stretch Cabinet

4. Cabinet Light: same as 336L Stretch Cabinet

5. Cabinet Fans: same as 336L Stretch Cabinet

6. C2 Connector: same as 336L Stretch Cabinet

7. No Mercury Contactor Relays: same as 336L Stretch Cabinet

8. Surge Protection for Control Equipment: same as 336L Stretch Cabinet

9. AC Service Inputs: same as 336L Stretch Cabinet

10. Remote Detector Input (As required on Plan Sheets): same as 336L Stretch Cabinet

11. Inductive Loop Detector Inputs: same as 336L Stretch Cabinet

12. Police Panel: same as 336L Stretch Cabinet

13. Input File

    a. All rear wire labels shall be viewable/readable without the need to move wire.

    b. Shall be City of Norfolk Standards as per Figure 2 "Input File City of Norfolk Standard 332L Cabinet". The file shall have a full complement of eighteen 2-Channel detectors and five 242 DC and three 252 AC isolators.

FIGURE 2 - CITY OF NORFOLK
STANDARD MODEL 332L CABINET
INPUT FILE

	1	2	3	4	5	6	7	8	9	10	11	12	13	14
U "I"	g1	g 2 E, CT	g 2 E, CT	2 Call	g 3	g 4 E, CT	g 4 E, CT	4 Call	g 1 E, CT	N/A	N/A	PED g 2	PED g 6	FLH
L	E, CT	g 2 E, CT	g 2 E		E, CT	g 4 E, CT	g 4 E		g 3 E, CT	N/A	Interval Advance 53	PED g 4	PED g 8	STOP TIME
U "J"	g 5	g 6 E, CT	g 6 E, CT	6 Call	g 7	g 8 E, CT	g 8 E, CT	8 Call	g 5 E, CT	N/A	Manual Control Enable 54	EVA	EVB	RR1
L	E, CT	g 6 E, CT	g 6 E		E, CT	g 8 E, CT	g 8 E		g 7 E, CT	N/A	N/A	EVC	EVD	RR2

LEGEND

SYS - System Sensor
FLH - Flash Sense
E- Extension
g - Phase
CT - Count
PED - Pedestrian Push button
RR - Railroad Pre-Emption
EV - Emergency Vehicle
N/A - Not Assigned
SF - Special Function

14. Output File

The output file shall be hand wired. No printed circuit boards will be allowed. Bottom of output file shall be at least 13-1/2 inches from bottom of cabinet rack frame.

15. Shelf Drawer: same as 336L Stretch Cabinet

16. DIN Rail: same as 336L Stretch Cabinet

17. Connector C1 Wiring Harness: same as 336L Stretch Cabinet

18. C5 Connector: same as 336L Stretch Cabinet

19. Cabinet Identification: same as 336L Stretch Cabinet

20. 120 VAC Receptacles (non-GCFI): same as 336L Stretch Cabinet

21. Extension Base

A twelve inch (12”) base extension shall be provided to extend the height of the cabinet when the cabinet is installed on a foundation.

22. Adapter Base

When stipulated on the plans, a twelve inch (12") high "P" base adapter base shall be provided to extend the height of the cabinet when the cabinet is installed on an existing NEMA cabinet a foundation.

D. Cabinet, Model 332L Stretch

1. General

The Cabinet Assembly shall be a Model 332L Stretch cabinet, with all components as described in the Specifications.

2. Cabinet Finish: same as 336L Stretch Cabinet

3. Cabinet Door, Locks and Lifting Rings: same as 336L Stretch Cabinet

4. Cabinet Light: same as 336L Stretch Cabinet

5. Cabinet Fans: same as 336L Stretch Cabinet

6. C2 Connector: same as 336L Stretch Cabinet

7. No Mercury Contactor Relays: same as 336L Stretch Cabinet

8. Surge Protection for Control Equipment: same as 336L Stretch Cabinet

9. AC Service Inputs: same as 336L Stretch Cabinet

10. Remote Detector Input (As required on Plan Sheets): same as 336L Stretch Cabinet

11. Inductive Loop Detector Inputs: same as 336L Stretch Cabinet

12. Police Panel: same as 336L Stretch Cabinet

13. Input File:

    a. All rear wire labels shall be viewable/readable without the need to move wire.

    b. Shall be City of Norfolk Standards as per Figure 2 "Input File City of Norfolk Standard 332L Cabinet". The file shall have a full complement of eighteen 2-Channel detectors and five 242 DC and three 252 AC isolators.

14. Output File: same as 336L Stretch Cabinet

15. Auxiliary Output File

    The auxiliary 4 position overlap output file shall be hand wired. No printed circuit boards will be allowed. Bottom of auxiliary output file shall be at least 8-1/2 inches from bottom of cabinet rack frame.

16. Shelf Drawer: same as 336L Stretch Cabinet

17. DIN Rail: same as 336L Stretch Cabinet

18. Connector C1 Wiring Harness: same as 336L Stretch Cabinet

19. C5 Connector: same as 336L Stretch Cabinet

20. Cabinet Identification: same as 336L Stretch Cabinet

21. 120 VAC Receptacles (non-GCFI): same as 336L Stretch Cabinet

22. Extension Base

    A twelve inch (12”) base extension shall be provided to extend the height of the cabinet when the cabinet is installed on a foundation.

23. Adapter Base

When stipulated on the plans, a twelve inch (12") high "P" base adapter base shall be provided to extend the height of the cabinet when the cabinet is installed on an existing NEMA cabinet foundation.

F. Model 2010ECLip Enhanced Conflict Monitor

Must be fully compatible with the City of Norfolk Automatic Traffic Management System (ATMS). All local communications software necessary for the monitor must be provided at no additional charge. The interface cabling shall be provided with the monitor.

1. General

This specification sets forth the minimum requirements for a rack-mountable, sixteen channel, solid-state 2010 Signal Monitor for a Type 170 / 179 / 2070 Traffic Cabinet Assembly. The manufacturer of the unit shall at least have a base 210 model conflict monitor listed on the current California Department of Transportation (Caltrans) Qualified Products List (QPL) and the Transportation Electrical Equipment Specifications (TEES) for signal monitors.

The Signal Monitor shall be capable of monitoring sixteen channels consisting of a Green input, a Yellow input, and a Red input for each channel. The unit shall also include the enhanced monitoring functions described in Section 2, diagnostic display functions described in Section 3, event logging functions described in Section 4, communications functions described in Section 5, and hardware functions described in Section 6.

2. Monitor Functions

All fault timing shall be computed for each channel individually except for Conflict faults.

a. Conflict Monitoring

The Signal Monitor shall be able to detect the presence of conflicting green or yellow signal voltages on the AC field terminals between two or more non-compatible channels. A Conflict fault (CONFLICT) shall be a latching fault.

i. Conflict Recognition Time

The Signal Monitor shall trigger when voltages on any conflicting channels are present for more than 500 ms. The Signal Monitor shall not trigger when voltages on any conflicting channels are present for less

than 200 ms. Conflicting signals sensed for more than 200 ms and less than 500 ms may or may not trigger the unit.

b. 24VDC Monitoring VDC

The Signal Monitor shall be able to detect that the cabinet +24 Vdc supply has fallen below 18 Vdc. A 24VDC failure (VDC FAIL) shall be a latching fault.

i. 24VDC Recognition Time

The Signal Monitor shall trigger when the voltage on the +24V input is below 18 Vdc for more than 500 ms. The Signal Monitor shall not trigger when the voltage on the +24V input is below 18 Vdc for less than 200 ms. A voltage level of +22 Vdc shall be required to prevent the unit from triggering.

c. Controller Watchdog Monitoring

The Signal Monitor shall trigger when the Watchdog input does not toggle within the programmed time period (WDT ERROR). The unit shall remain latched in the fault state until reset by the Reset button, an External Reset input command, or AC Line voltage restoring from a AC Line Brownout event (see 2.4). A reset resulting from an AC Line Brownout event shall not clear the WDT ERROR LED.

i. Controller Watchdog Latch Option

A programming option shall set the Watchdog monitoring function to a latching mode. Only a reset from the Reset button or External Reset input shall clear a Watchdog fault. An AC Line brownout condition will not reset the fault.

ii. Controller Watchdog Recognition Time

A programming option shall set the maximum Watchdog recognition time to 1000 ±100 ms or 1500 ±100 ms.

iii. Controller Watchdog Enable Switch

An internal switch shall be provided to disable the Watchdog monitoring function. The switch shall be mounted on the PCB and be clearly labeled "WD ENABLE - ON...OFF". Placement of the switch in the OFF position shall cause monitoring of the Watchdog to be inhibited.

iv. WDT ERROR LED Control

The WDT ERROR LED shall illuminate when the unit has been triggered by a Watchdog fault. It shall only be cleared by a reset command from the front panel Reset switch or External Reset input. If the Watchdog monitoring function is inhibited due to the Watchdog Enable switch, the WDT ERROR LED shall flash at a 0.5 Hz rate.

d. AC Line Monitoring

i. AC Line Brownout Recognition

The Signal Monitor shall be able to detect that the AC Line has fallen below 98 ±2 Vac for greater than 400 ±50 ms. This shall force the output Relay to the de-energized "fault" state, enable the Stop-Time output, and cause the AC POWER LED to flash at a 2 Hz rate. The unit shall maintain this state until the AC Line voltage rises above 103 ±2 Vac for greater than 400 ±50 ms. A jumper option shall be provided which will change the AC Brownout dropout level to 92 ±2 Vac and the restore level to 98 ±2 Vac.

ii. AC Line Power-up and Brownout Delay Time

When the AC Line is greater than 103 ±2 volts after power-up or Brownout restore, the Signal Monitor shall hold the Output Relay in the de-energized "fault" state and enable the Stop-Time output, for a period of not less than 6.0 ±0.5 seconds and not greater than 10.0 ±0.5 seconds. This flash interval shall be terminated after at least 6.0 ±0.5 seconds if the Signal Monitor has detected at least five transitions of the Watchdog input. If the Signal Monitor does not detect five transitions of the Watchdog input before 10.0 ±0.5 seconds the Signal Monitor shall go to the fault state. During this interval the AC POWER LED shall flash at a 4 Hz rate.

e. Red Fail Monitoring

The Signal Monitor shall be able to detect the absence of an active voltage on the green and yellow and red field signal inputs of a channel. Red Fail fault (RED FAIL) shall be a latching fault. The Red Fail monitoring function shall be enabled for all channels except when the Red Enable input is not active, or pin #EE is active, or Special Function #1 input is active, or Special Function #2 input is active.

i. Red Fail Recognition Time

The Signal Monitor shall trigger when an active voltage on one of the three inputs of a channel are absent for more than 1500 ms. The Signal

Monitor shall not trigger when an active voltage on one of the three inputs of a channel are absent for less than 1200 ms. Channels without proper voltages sensed for more than 1200 ms and less than 1500 ms may or may not trigger the unit. An option switch (RF 2010) shall be provided which will change the fault recognition time to between 700 ms and 1000 ms.

ii. Red Interface Cable Fault

A programming option shall be provided such that operating without the Red Interface cable installed shall cause the Signal Monitor to enter the fault mode causing the Output relay contacts to close and enabling the Stop-Time output to the controller. To indicate this fault mode the Red Fail indicator shall be illuminated with all fault channel indicators Off.

Any Red Fail preemption control to the monitor shall use the Special Function inputs #1 or #2.

f. Dual Indication Monitoring

The Signal Monitor shall be able to detect the presence of active voltage on the green and yellow, green and red, or yellow and red field signal inputs of a channel. GYR Dual Indication fault (DUAL IND) shall be a latching fault. This function shall be enabled on a per channel basis using dip switches mounted on the PCB labeled "CH1" through "CH16". The GYR Dual Indication monitoring function shall be enabled for all selected channels except when the Red Enable input is not active or pin #EE is active.

i. GY Dual Indication Monitoring

The Signal Monitor shall be able to detect the presence of active voltage on the green and yellow field signal inputs of a channel. GY Dual Indication fault (DUAL IND) shall be a latching fault. This function shall be enabled with a dip switch on the PCB labeled "GY ENABLE". When the switch is in the ON position, all channels shall be monitored for simultaneous active green and yellow inputs on a channel. When selected by the GY ENABLE switch, the GY Dual Indication monitoring function shall be disabled when pin #EE is active.

ii. Dual Indication Recognition Time

The Signal Monitor shall trigger when multiple inputs are active on a channel for more than 500 ms. The Signal Monitor shall not trigger when multiple inputs are active on a channel for less than 250 ms. Channels with multiple voltages active for more than 250 ms and less than 500 ms may or may not trigger the unit.

g. Sequence (Short or Absent Yellow) Monitoring

The Signal Monitor shall be able to detect that a channel has not provided an adequate Yellow Clearance interval during a green to yellow to red sequence. A Sequence failure (SEQUENCE) shall be a latching fault. This function shall be enabled on a per channel basis using dip switches mounted on the PCB labeled "CH1" through "CH16". The Sequence monitoring function shall be enabled for all selected channels except when the Red Enable input is not active or pin #EE is active.

i. Sequence Recognition Time

The minimum Yellow Clearance interval may be modified by switches mounted on the PCB labeled "YEL TIME 1", "YEL TIME 2", and "YEL TIME 3". The Yellow Clearance interval shall be 2.7 seconds plus 0.2 seconds times the binary sum of the three switches. The minimum Yellow Clearance interval shall therefore have a range of 2.7 seconds to 4.1 seconds, $\pm$ 0.1 seconds.

h. Recurrent Pulse Detection (RP Detect)

The Signal Monitor shall detect Conflict, Red Fail, and Dual Indication faults that result from intermittent or flickering field signal inputs. These recurring pulses shall result in a latching fault with the RP DETECT indicator illuminated along with the resulting Conflict, Red Fail, or Dual Indication indicator. An option switch shall be provided to disable the RP detect function.

i. Flashing Yellow Arrow PPLT Support

The Signal Monitor shall be designed to monitor an intersection with up to four approaches using the four section Flashing Yellow Arrow (FYA) movement outlined by the NCHRP Research Project 3-54 on Protected/Permissive signal displays with Flashing Yellow Arrows. Two cabinet configurations shall be supported depending on the number of load switches provided and the capabilities of the Controller Unit. In both modes the Signal Monitor shall be designed to provide the same fault coverage for the FYA approaches as it does for conventional

protected left turn phases including Conflict, Red Fail, Dual Indication, and Minimum Yellow Clearance monitoring.

j. Configuration Change Monitoring

On power-up, reset, and periodically during operation, the Signal Monitor shall compare the current configuration settings with the previously stored value. If the settings have changed, the Signal Monitor shall automatically log the new setting. These settings shall include the permissive diode matrix, all switches, all jumpers, and the Watchdog Enable switch.

A programming option shall be provided such that any change in the configuration parameters shall cause the Signal Monitor to enter the fault mode causing the Output relay contacts to close and enabling the Stop-Time output to the controller. To indicate this fault mode the PCA indicator shall flash at a 4 Hz rate. Depressing the Reset button for 5 full seconds shall be required to clear this fault and log the new configuration parameters.

If the programming option is not selected, the unit shall not set the fault mode but will still log the configuration change.

k. Program Card Ajar

When the Programming Card is removed or not seated properly, the Signal Monitor shall force the Output Relay to the de-energized "fault" state, enable the Stop-Time output, and illuminate the PCA LED. A reset command from the front panel Reset switch or External Reset input shall be required once the Program Card is in place.

l. Exit Flash

When the Signal Monitor exits the flash state (Output relay de-energized) as a result of a Reset command or AC Line brownout restore, the Stop Time output shall go to the inactive state 250 $\pm$ 50 ms before the Output relay transfers to the energized state. This transition will provide an early indication to the Controller Unit that the cabinet will transfer from flash to signal operation.

3. Display Functions

It shall be possible to view the active channels for each individual color (GYR) during operation and when latched in a fault state. When the Signal Monitor is latched in a fault state it shall also be possible to view the active channels for each individual color and fault status for each channel for the current fault and the two previous faults.

a. Previous Fault GYR Display

When the Signal Monitor has been triggered by a fault the channel status display will alternate between the channels which were involved in the fault (fault status) for 2 seconds, and the field signals active at the time of the fault for 6 seconds. The channels involved in the fault will flash their respective Green, Yellow, and Red indicators simultaneously at a 4 Hz rate for the 2 second interval.

The two previous faults may also be displayed individually. This status is not reset by an AC Line power interruption. To enter this display mode remove the Program Card. The sequence is as follows:

Reset	**Event**	**PCA LED**	**Fault Status LEDs**	**Channel Status LEDs**
---	#1	Single	Flash Current Fault Status (newest)	Current Field Status
#1	#2	Double Flash	Event #2 Fault Status	Event #2 Field Status
#2	#3	Triple Flash	Event #3 Fault Status (oldest)	Event #3 Field Status (repeats back to top)

4. Event Logging Functions

The Signal Monitor shall be capable of storing in non-volatile memory a minimum of 100 events. Each event shall be marked with the time and date of the event. These events shall consist of fault events, AC Line events, reset events, and configuration change events. A graphical means of displaying the signal states of all field inputs for 30 seconds prior to a fault trigger event shall also be provided. The capability to assign a four digit identification number to the unit shall be provided. The event logs shall be uploaded to a PC using the serial port of the Signal Monitor and software provided **at no cost** by the manufacturer.

Each event log report shall contain the following information:

- Monitor ID#: a four digit (0000-9999) ID number assigned to the monitor.
- Time and Date: time and date of occurrence.
- Event Number: identifies the record number in the log. Event #1 is the most recent event.

b. Monitor Status Report (CS)

The Current Status report shall contain the following information:

i. Fault Type: the fault type description.

ii. Field Status: the current GYR field status and field RMS voltages if the monitor is not in the fault state, or the latched field status and field RMS voltages and fault channel status at the time of the fault.
iii. Cabinet Temperature: the current temperature if the monitor is not in the fault state, or the latched temperature at the time of the fault.
iv. AC Line Voltage: the current AC Line voltage if the monitor is not in the fault state, or the AC Line voltage at the time of the fault.
v. Control Input Status: the current state and RMS voltages of the Red Enable input, EE input, and Special Function #1 and #2 inputs if the monitor is not in the fault state, or the status latched at the time of the fault.

c. Previous Fault Log (PF)

The Previous Fault log shall contain the following information:

i. Fault Type: the fault type description.
ii. Field Status: the latched field status with RMS voltages, and fault channel status at the time of the fault.
iii. Cabinet Temperature: the latched temperature at the time of the fault.
iv. AC Line Voltage: the AC Line voltage at the time of the fault.
v. Control Input Status: the latched state of the Red Enable input, EE input, and Special Function #1 and #2 inputs at the time of the fault.

d. AC Line Event Log (AC)

The AC Line log shall contain the following information:

i. Event Type: describes the type of AC Line event that occurred.

ii. Power-up - AC on, monitor performed a cold start

1. Interrupt - AC Line < Brownout level
2. Restore - AC restored from brown-out or interruption (AC Off), no cold start

iii. AC Line Voltage: the AC Line voltage at the time of the event.

e. Monitor Reset Log (MR)

The Monitor Reset log shall contain the following information:

i. The monitor was reset from a fault by the front panel Reset button or External Reset input.

f. Configuration Change Log (CF)

The Configuration Change log shall contain the following information:

i. Program Card Matrix: the permissive programming for each channel.
ii. Yellow Disable Jumpers: the Yellow Disable programming for each channel.
iii. Dual/Sequence Switches: the switch programming for each channel.
iv. Option Switches: RF 2010, RP Disable, GY Enable, SF1 Polarity, Sequence Timing, Minimum Flash Enable, Configuration Fault Enable, Red Cable Fault enable, AC Brownout timing.
v. Watchdog Programming: Watchdog Enable, Watchdog Latch, and Watchdog timing.
vi. Configuration CRC: A unique CRC value which is based on the configuration of items #a though #e above.
vii. The log shall also indicate which items have been changed since the last log entry.

g. Signal Sequence Log

A log shall be provided that graphically displays all field signal states for up to 30 seconds prior to the current fault trigger event. The resolution of the display shall be at least 50 milliseconds.

5. Communications Functions

b. Controller Unit Communications
The Signal Monitor shall be compatible with the Command/Response protocol of BI Tran Systems Inc. Model 233 Software. The unit shall support command types 02 and 07.

c. Personal Computer Communications

The manufacturer shall provide software to access the Signal Monitor status and event logs described in Section 4. This software shall operate with the City of Norfolk's current adopted version of Microsoft Windows.

6. Hardware

a. Front Panel

The front panel shall be constructed of sheet aluminum with a minimum thickness of 0.090", and shall be finished with an anodized coating. The model information shall be permanently displayed on the front surface.

i. Indicators

All display indicators shall be mounted on the front panel of the Signal Monitor and shall be water clear, T-1 package, Super Bright type LEDs. All fault LEDs shall be red except the AC POWER indicator which shall be green. A separate Red, Yellow, and Green indicator shall be provided for each channel. The indicators shall be labeled and provide the information as follows:

a) AC POWER: The AC POWER indicator shall flash at a rate of 2 Hz when the unit has detected a low voltage condition as described in Section 2.4. The AC POWER indicator shall flash at a rate of 4 Hz during the minimum flash interval as described in Section 2.4.2. It shall illuminate when the AC Line voltage level is restored above the brownout level. The indicator shall extinguish when the AC Line voltage is less than 80 Vac.

b) VDC FAILED: The VDC FAILED indicator shall illuminate when a 24VDC fault condition is detected. This indicator remains extinguished if the monitor has not been triggered by a 24VDC fault.

c) WDT ERROR: The WDT ERROR indicator shall illuminate when a controller Watchdog fault is detected. If the WD ENABLE switch on the monitor is placed in the OFF position to disable Watchdog monitoring, or the AC Line voltage is below the Watchdog disable level, the WDT ERROR indicator shall flash ON once every 2 seconds.

d) CONFLICT: The CONFLICT indicator shall illuminate when a conflicting proceed signal fault is detected.

e) DIAGNOSTIC: The DIAGNOSTIC indicator shall illuminate when one of the following faults are detected: Internal Watchdog fault, Memory Test fault, or Internal power supply fault. This indicator is intended to inform the service technician of a monitor hardware or firmware failure.

f) RED FAIL: The RED FAIL indicator shall illuminate when an absence of signal is detected on a channel(s). If the Red Enable input is not active, or a Special Function input is active, or the EE input is active the RED FAIL indicator shall flash ON once every two seconds.

g) DUAL IND: The DUAL IND indicator shall illuminate when a GY-Dual or GYR-Dual Indication fault is detected on a channel(s).

h) SEQUENCE: The SEQUENCE indicator shall illuminate when the minimum Yellow Clearance time has not been met on a channel(s).

i) PCA: The PCA indicator shall illuminate if the Program Card is absent or not properly seated.

If the unit is in the Diagnostic Display mode, the PCA indicator shall flash ON (once, twice, or three times) to indicate the fault event number being displayed. See Section 3.

j) RP DETECT: The RP DETECT indicator shall illuminate when the unit has detected a Conflict, Red Fail, or Dual Indication fault as a result of recurring pulse field inputs.

k) CHANNEL STATUS: During normal operation the 48 Channel Status indicators shall display all active signals (Red, Green, and Yellow). In the fault mode the Channel Status indicators shall display all signals active at the time of the fault for six seconds and then indicate the channels involved in the fault for 2 seconds.

ii. Front Panel Control

RESET Button: A momentary SPST Control switch labeled RESET shall be provided on the unit front panel to reset the monitor circuitry to a non-failed state. The switch shall be positioned on the front panel such that the switch can be operated while gripping the front panel handle. A reset command issued from either the front panel button or External Reset input shall be a one-time reset input to prevent the unit from constant reset due to a switch failure or constant external input, and shall cause all LED indicators to illuminate for 300 ms.

The Reset button also provides control of the Diagnostic Display mode. For a complete description of Diagnostic Display operation see Section 3.

iii. Ethernet LAN Port

This connector shall be used to provide Ethernet LAN communications. It shall be a standard 8 pin RJ-45 female port.

b. Electronics

i. RMS Voltage Sampling

High speed sampling techniques shall be used to determine the true RMS value of the AC field inputs. Each AC input shall be sampled at least 32

times per cycle. The RMS voltage measurement shall be insensitive to phase, frequency, and waveform distortion.

ii. Internal MPU Watchdog

A microprocessor shall be used for all timing and control functions. Continuing operation of the microprocessor shall be verified by an independent monitor circuit, which shall force the Output Relay to the de-energized "fault" state, enable the Stop-Time output, and illuminate the DIAGNOSTIC indicator if a pulse is not received from the microprocessor within 300 ms.

If the microprocessor should resume operation, the Signal Monitor shall continue to operate. This monitoring circuit shall also be configurable to latch in the fault state. Once triggered, the unit shall require a power-up cycle to reset the circuit.

iii. Sockets

In the interest of reliability, only the PROM memory device for the microprocessor firmware shall be socket mounted. The PROM memory socket shall be a precision screw machine type socket with a gold contact finish providing a reliable gas tight seal. Low insertion force sockets or sockets with "wiper" type contacts shall not be acceptable.

iv. Internal Power Supply

A built-in, high-efficiency switching power supply shall generate all required internal voltages. All supply voltages shall be regulated. Failure of the internal power supply to provide proper operating voltages shall force the output Relay to the de-energized "fault" state, enable the Stop-Time output, and illuminate the DIAGNOSTIC indicator. A user replaceable slow blow fuse shall be provided for the AC Line input. The unit shall be operational over the AC Line voltage range of 75 Vac to 135 Vac.

v. EIA-232 Interface

The EIA-232 port interface electronics shall be electrically isolated from all monitor electronics except chassis ground.

vi. Configuration Parameters

User-programmed configuration settings shall be selected using PCB mounted switches or jumpers. Designs requiring a Personal Computer (PC) to program or verify the configuration parameters are not acceptable.

User-programmed configuration settings which are transferred to memory shall be stored in a programmable read-only memory (PROM or EPROM). Designs using a battery to maintain configuration data shall not be acceptable.

vii. Field Terminal Inputs

All 120 Vac field terminal inputs shall provide an input impedance of 150K ±50K ohms and be terminated with a discrete resistor having a power dissipation rating of 0.5 Watts or greater and a voltage rating exceeding 350 volts.

viii. Component Specifications

All electrical components used in the Signal Monitor shall be rated by the component manufacturer to operate beyond the full unit operating temperature range of -34°C to +74°C.

ix. Printed Circuit Boards

All printed circuit boards shall meet the requirements of the latest California Traffic Signal Control Equipment Specifications plus the following requirements to enhance reliability:

1) All plated-through holes and exposed circuit traces shall be plated with solder.
2) Both sides of the printed circuit board shall be covered with a solder mask material.
3) The circuit reference designation for all components and the polarity of all capacitors and diodes shall be clearly marked adjacent to the component. Pin #1 for all integrated circuit packages shall be designated on both sides of all printed circuit boards.
4) All electrical mating surfaces shall be gold plated.
5) All printed circuit board assemblies shall be coated on both sides with a clear moisture-proof and fungus-proof sealant.
6) All components and wire harnesses shall be mounted to the PCB using plated holes. "Piggy back" connections or jumper wires shall not be acceptable.

703.03 - Documentation

The City shall be provided with the following:

- Cabinet drawing *
    a. Cabinet print shall be a fully functional print with labeling
    b. **Digital copy** and two **(2) paper copies** shall be provided with each cabinet
- Job specifications (City of Norfolk Section 703) pertinent to the installation

- Intersection drawing *
- Phasing diagram *
- Loop detector locations *
- Typical Wiring Diagram (input and output files) *
- Cabinet test results
- Conflict Monitor test results
- Controller test results
- All equipment manuals for equipment listed in 703.02.B. Enclosed Equipment

6. *Provide AUTOCAD 2000 drawings file on electronic media

703.04 - Statement of Warranty and Compliance

In these specifications, whenever a specific design or construction has been specified, it is intended to establish a standard of performance, and any design or construction giving strictly equivalent performance may be considered, provided that the vendor brings such exceptions to the attention of the Traffic Engineer in writing, at the time of bid submittal.

Each vendor shall include in his proposal all warrants and/or guarantees with respect to materials, parts, workmanship, or performance which are included for equipment covered by this specification.

The vendor shall ship only complete controller/cabinet assemblies with complete documentation included. Substandard controller/cabinet assemblies will not be accepted and will be returned to the vendor after the Contractor has notified the vendor both by telephone and by letter. Within seven (7) days after the vendor first receives notice of rejection of a shipment, the vendor shall remove the shipment, the Contractor will forward the shipment to the vendor by common carrier at the vendor's expense and risk.

703.05 - Warranty

Prior to installation and intersection cut-on, the equipment will be fully tested using industry standard testing and diagnostic software. The contractor shall coordinate with the Division of Transportation project representative to schedule the testing. Any equipment that fails these tests will not be approved for installation by the contractor. The following equipment shall be subject to testing:

- Controller
- Cabinet Assembly
- Conflict Monitor
- Load Relays
- Vehicle Detectors

Each cabinet and controller component shall have a 90-day field burn-in period after the approved testing has been completed. Any controller or controller component failing to meet the specifications or which has repeated malfunctions within 90 days of installation shall be subject to replacement of the defective unit or complete controller at no cost to the City (or to refund of the purchase price of the controller, at the discretion of the City). The full one-year warranty shall be applicable on all replacement controllers and modules. Continued failure and repeated malfunctions of any controller mode shall be cause to remove that model from the list of acceptable models for future purchasing.

703.06 - Installation

1. Prior to installation in the field, cabinet and associated cabinet equipment shall be provided to City of Norfolk Traffic Operations Center (TOC) for testing and specification verifications. Estimated two day turn around depending on the quantity of cabinets delivered.

2. Prior to installation of the 2070 controller, the contractor shall coordinate delivery of the device with the Project Inspector to the City's Smart Traffic Center for data base download. The controller shall be delivered at least two weeks prior to the scheduled installation of the device.

3. The controller assembly shall be securely bolted to a prepared foundation of specified size (See Details of Cabinet foundation). The bolt pattern shall match the bolt pattern of the cabinet.

4. When Battery Back-up System (BBS) cabinet is installed with a new controller cabinet assembly, a separate 1 ½" conduit shall be installed between controller cabinet foundation and BBS foundation for ruggedized fiber optic jumpers and/or ruggedized Ethernet cables.

5. The front door of the controller cabinet shall open in the direction which will permit maintenance personnel to view the intersection.

6. The complete assembly shall be effectively weatherproof.

7. Each assembly shall be effectively grounded using a #8 copper wire attached to the cabinet by a stainless steel bolt and to the ground rod by a square head clamp.
8. Grouting around the base foundation shall be with "no-shrink" grout.

9. Installation procedure in all cases shall be those as recommended by National Electrical Code.

10. Field wiring shall be neat and laid out in a logical and orderly manner. Permanent marker labels shall be used to identify each field wire.

11. The contractor shall furnish an as built wiring mark-up of the Input and Output Files.

703.07 – Measurement and Payment

Traffic Controller Assembly:

Method of Measurement: Traffic Controller Assembly will be measured in units of Each (EA).
Basis of Payment: the unit price per Traffic Controller Assembly shall be based on the following work tasks.

Furnish and Install – The unit price to furnish and install a Traffic Controller Assembly (Type 170, cabinet type, finish type) shall include the traffic controller, cabinet, base adapter or base extension, 2070 Controller and Modules, fiber optic media converter, Layer 2 Ethernet Switch, Model 2010ECLip Enhanced Conflict Monitor, loop detectors, splice tray, harnesses as required, switch packs, DC isolators, AC isolators, flash transfer relays, power supply, power distributor, flasher as specified herein Section 703 of these specifications, tools, equipment, labor, incidental fittings necessary to mount the controller cabinet, and training of personnel (if applicable) will be considered full compensation of this work task. Any landscaping materials, including plants, shrubs, or other vegetation, damaged during the installation of the proposed traffic controller assembly that is not otherwise called for removal in the Plans shall be replaced in kind at the expense of the Contractor. Contractor to coordinate with the Department of Parks and Forestry to determine proper planting application and refer to City of Norfolk Specifications Section 329300 for landscaping requirements and procedures.

Traffic Controller Cabinet:

Method of Measurement: Traffic Controller Cabinet will be measured in units of Each (EA).

Basis of Payment: the unit price per Traffic Controller Cabinet shall be based on the following work tasks.

Furnish and Install – The unit price to furnish (without plug-ins, cabinet type, finish type) and install a Traffic Controller Cabinet on the existing Traffic Control Cabinet foundation as shown in the plans, shall include the traffic controller cabinet, base adapter, power supply and power distributor as specified herein Section 703 of these specifications. Tools, equipment, labor, incidental fittings necessary to mount the controller cabinet, training of personnel (if applicable), and fiber optic connection relocation will be considered full compensation of this work task. The unit price shall also include all tools, equipment, labor and incidentals that are needed to relocate and place into operation a fiber optic connection that is online with the City of Norfolk's existing fiber optic network. This work includes relocating the existing fiber optic cable from the existing controller cabinet to the proposed cabinet. Tools, equipment, labor and incidentals to be included are those needed for furnishing and installing new conduit, fiber optic cable, fiber optic splices, splice enclosures, LC connectors, etc. and any other items needed for bringing the controller

cabinet online with the City of Norfolk's existing fiber optic network. Any landscaping materials, including plants, shrubs, or other vegetation, damaged during the installation of the proposed traffic controller assembly that is not otherwise called for removal in the Plans shall be replaced in kind at the expense of the Contractor. Contractor to coordinate with the Department of Parks and Forestry to determine proper planting application and refer to City of Norfolk Specifications Section 329300 for landscaping requirements and procedures.

End of Section

SECTION 706 - TRAFFIC SIGNAL HEAD ASSEMBLY

706.01 – Description

The work under this section shall consist only of furnishing and installing Traffic Control Signal Heads of the number and type of sections indicated on the Contract Drawings at the locations shown on the contract drawings, or as directed by the Engineer in conformance with these specifications. The work specified in this Section shall override all traffic signal head assembly references in the 2007 VDOT Road and Bridge Specifications Section 703 – Traffic Signals.

706.02 - Signal Head

A. Signal heads shall be dust-tight and meet the requirements of current ITE specification "A Standard for Vehicular Traffic Control Signal Heads".

B. Housing: The housing of each section shall be a one-piece corrosion resistant aluminum alloy diecasting. The housing shall have a symmetrical concept which will allow either right or left handed door opening. All hardware shall be stainless steel.

C. Door: Shall be die-cast of silicon aluminum with an opening of sufficient diameter to accommodate the lens. One side of the door at the top and bottom there shall be a hinge so as to insure perfect alignment of the door. On the opposite side of the door there shall be a locking device to secure even gasket pressure. Hinge pins and locking device shall be stainless steel.

D. Visors: Shall be detachable and shall be of the cut-away type.

E. Lamps/Lens: Shall be in accordance with Section 709.

F. Terminals: Each signal head shall be provided with a terminal block having sufficient screw type terminals to terminate all field conductors and lamp conductors independently with separate screws.

G. Painting: The color of all exterior surfaces of each signal head shall be painted Federal Black in color.

706.03 – Ray Louver

A. The straight ray louver shall provide an angle of cut-off on each side of the center axis of the light beam as follows:

a. Type A 7 to l0 degrees
b. Type B 11 to l4 degrees

B. The straight ray louver shall be of steel or aluminum alloy. The ray louver must be from the same manufacturer as the signal heads are intended for.

C. The tubular cover shall be corrugated. The lanes shall mesh perfectly with the corrugations on the inside cover. The corrugations shall be approximately l/4 inch wide and l/l6 inch deep and have flat sides that form sharp serrated edges.

D. The louver shall be shop painted with one (l) coat of primer and two (2) coats of dull black enamel.

706.04 - Mounting Requirements

A. The standard traffic signal head assembly shall be mounted in accordance with the following type of mounting installation as called for on the plans.

B. Mast Arm Installation: Signal heads installed on mast arms shall utilize Astro-Brac AB-l02 and AB-l09 mounting kits or approved equal. (See VDOT Standard SM-3).

C. Signal head housing shall be jointed at top and bottom by brackets made of aluminum pipe not smaller than l l/2 inches in diameter with suitable sockets at each end to form complete signals of the specified number of sections. Unused ends of the sockets shall be closed with ornamental cap screws. Each signal body shall be jointed to the socket by a ripple through the end plate. Joints shall be rendered weatherproof and dust-tight by a suitable combination of lead and steel washers.

D. Span Wire Assembly: See Specification Section 755.

E. Side Mount Installation (VDOT Standard SM-3): The brackets shall be drilled and tapped with stainless steel nuts and bolts. Signals shall be installed on the back side of the pole.

F. Post-Top Mount Installation (VDOT Standard SMB-l or SMB-2) **(NOT TO BE USED FOR NEW INSTALLATIONS SEE 706.04, E)**: For post-top mounting of signals, a slip-fitter shall be used. Each slip-fitter shall fit over a 4 l/2-inch outside diameter pipe on tapered end. Each slip-fitter shall be provided with cadmium-plated steel set screws. Each slip fitter used to post-top mount signals with brackets shall be provided with an integral terminal compartment.

706.05 - Installation

This section specifies the requirements for the installation of traffic signal head assemblies.

A. The various components that describe a traffic signal head assembly shall be completely pre-assembled with the appropriate number of sections, faces, and lamps prior to installation of the site unless otherwise directed by the Engineer.

B. The locations of the installed signals as shown on the plans are as accurate as practicable and are to be considered as sufficiently flexible as to allow for adjustment of signal alignments with unanticipated field conditions at the site. There shall not be less than eight (8) feet between lines drawn perpendicular to any two (2) adjacent signal faces providing indications to the same approach. Unless directed otherwise by the Engineer where a signal face controls a specific lane or approach, its transverse position and alignment shall be unmistakably on the centerline with the path of that movement.

C. Vehicular signals shall be pointed in the direction of the approaching traffic they are to control and the center of the light beam shall be directed toward a point approximately l50 feet in advance of the stop line and in the center of the usually traveled traffic approach.

D. Unless directed otherwise by the Engineer for unusual circumstances at the site, traffic signals placed over the roadway shall be so installed as to provide a vertical clearance of not less than l7 feet and not more than l9 feet. Such clearance shall be measured for each span directly under the most critical signal assembly for that span. Signal assemblies on each span shall be placed as near as practical at the same elevation as the critical signal assembly.

   The lowest point on pedestal-mounted and side-mounted signal heads shall be l2 feet above finished grade at the point of their installation.

E. Where the installation of the traffic signal head is not done as a last operation in the installation of the over signal system, they shall be concealed by approved coverings. The signals shall be put into operation within 30 days after hanging the signals.

F. All mounting assembly members shall be either plumb or level symmetrically arranged and securely assembled. Construction shall be such as to permit all conductors to be concealed.

   The mounting assemblies shall be watertight and free to sharp edges or protrusions which might damage conductor insulation, and conform to Section 706.04 of this specification for the specified mounting type.

G. Wiring - It shall be the contractor's responsibility to connect the proper signal cable that meets the requirements of VDOT Specification Section 238, to the terminals in each signal head in order to provide the proper signal indication display when the cables are connected to the controller. A separate ground

circuit shall be wired and returned to the controller cabinet from each vehicular movement as shown on the plans.

H. Weep holes – a minimum of three 1/8" holes shall be drilled in the bottom of each traffic signal assembly.

706.06 – Measurement and Payment

Traffic Signal Head Assembly

A. Method of Measurement: Traffic signal assembly will be measured in units of EACH (EA) per type.

B. Basis of Payment: the contract unit price per signal assembly shall be based on the following work tasks:

1) Furnish: The unit price to furnish a traffic signal head assembly shall consist of a traffic signal head that conforms to Section 706.02, Item (a) of this specification. Mounting brackets shall be paid for separately.

2) Install: The unit price for an installed traffic signal head assembly shall consist of all tools, equipment, hardware as required in Section 706.03, labor and incidentals necessary to wire a traffic signal assembly for a complete and accepted installation, in accordance with Section 706 of this specification. Mounting brackets shall be paid for separately.

3) Furnish and Install: The unit price to furnish and install a standard traffic signal head assembly shall consist of a traffic signal head that conforms to 706.02, Item (a) of this specification, hardware as required in Section 706.03, tools, equipment, labor and incidentals necessary for a complete and accepted installation in accordance with Section 706 of this specification. Mounting brackets shall be paid for separately.

Mounting Brackets

A. Method of Measurement: Mounting brackets will be measured in units of EACH (EA) per type.

B. Basis of Payment: the contract unit price per mounting bracket shall be based on the following work tasks:

1) The mast arm installation unit price shall include the mounting brackets, tools, equipment, labor, hardware, and all incidentals necessary for a complete and accepted installation of traffic signal assembly.

2) The side mount installation unit price shall include the mounting brackets, paint, hardware, tools, equipment, labor and all incidentals necessary for a complete and accepted installation.

3) The post-top mount installation unit price shall include the mounting brackets, strapping material, hardware, tools, equipment, labor and all incidentals necessary for a complete and accepted installation.

Ray Louvers

A. Method of Measurement: Ray louver will be measured in units of EACH (EA) per type.

B. Basis of Payment: the contract unit price per ray louver shall be based on the following work tasks:

1) Furnish and Install: The unit price to furnish and install a standard ray louver shall consist of a ray louver that conforms to section 706 of this specification, hardware, tools, equipment, labor and incidentals necessary for a complete and accepted installation.

End of Section

SECTION 708 - SELECTIVE VIEW TRAFFIC SIGNAL ASSEMBLY

708.01 – Description

The optically programmed signal shall permit the visibility zone of the indication to be determined optically and require no hoods or louvers. The projected indication may be selectively visible or veiled anywhere within l5 degrees of the optical axis. No indication shall result from external illumination nor shall one light unit illuminate a second.

708.02 - Equipment

The components of the optical system shall comprise:

l. Lamp
2. Lamp collar
3. Optical limiter-diffuser
4. Objective lens

The lamp shall be nominal l50 watt, ll5V AC or 75W l20V AC, three prong, sealed beam having an integral reflector with stippled cover and an average rated life of 6,000 hours when operated in an Optically Programmed Signal according to manufacturer's specifications.

The optical limiter shall provide an accessible imaging surface at focus on the optical axis for objects 900 to l200 feet distance, and permit an effective veiling mask to be variously applied as determined by the desired visibility zone. The optical limiter shall be provided with positive indexing means and composed of heat resistant glass.

The objective lens shall be a high resolution annular incremental lens hermetically sealed within a flat laminant of weather resistant acrylic or approved equal. The lens shall be symmetrical in outline and may be rotate to any 90 degree orientation about the optical axis without displacing the primary image.

The optical system shall accommodate projection of diverse, selected to separate portions of the roadway such that only one indication will be simultaneously apparent to any viewer. The projected indication shall conform to ITE transmittance and chromaticity standards.

708.03 -Construction

Die cast aluminum parts shall conform to ITE alloy and tensile requirements and have a chromate predatory treatment. The exterior of the signal case, lamp housing and mounting flanges shall be finished with a high quality baked acrylic finish paint, Federal Black in color. The lens holder and interior of the case shall be optically flat black. Signal case and lens holder shall be pre-drilled for backplates and visors. Hinge and latch

pins shall be stainless steel. All access openings shall be sealed with weather resistant rubber gaskets. Each section shall have two drain holes.

Sheet metal parts including visors and backplates shall conform to ITE material requirements, and shall include a chromate preparatory treatment and optical flat black on all surfaces unless otherwise specified and conform to Section 706.02, Item (b) of these specifications.

708.04 - Mounting

The signal shall mount to standard l-l/2 inch N.P.T. fittings as a single section, as a multiple section face, or in combination with other signals, and conform to Sections 706.03, items A, C, or D as specified on the plans. The signal section shall be provided with an adjustable connection that permits incremental tilting from 0 to l0 degrees above or below the horizontal while maintaining a common vertical axis through couplers and mounting. Terminal connection shall permit external adjustment about the mounting axis in 5 degree increments. The signal can be installed with ordinary tools and services with no tools.

Attachments such as visors, backplates, or adapters shall conform to Section 706 and readily fasten to existing mounting surfaces without affecting sealing and light integrity of the signal.

708.05 - Electrical

Lamp fixture shall comprise a separately accessible housing and integral lamp support, indexed ceramic socket and self aligning, quick release lamp retainer. Electrical connection between case and lamp housing shall be accomplished with an interlock assembly which disconnects lamp housing when opened. Each signal section shall include a covered terminal block for clip or screw attachment or field wires. Concealed #l8 AWG, stranded and coded wires shall interconnect all sections to permit field connection within any section.

708.06 - Photo Controls

Each signal section shall include integral means for regulating its intensity between limits as a function of individual background illumination. Lamp intensity shall not be less than 97% of uncontrolled intensity at l000 ft-c. and shall reduce to l4$\pm$ 2% of maximum at less than one (l) ft-c. over the applied voltage and ambient temperature range. Response shall be proportional and essentially instantaneous to any detectable increase from darkness to l000 ft-c. and damped for any decrease from l000 ft-c.

The intensity controller shall be comprised of an integrated, directional light sensing and regulating device interposed between lamp and field wires. The devices shall be responsive over an applied voltage of 95 to l30y. 60 Hz. temperature range of 40 degrees

F to l65 degrees F and may provide phase controlled output voltage but shall have a nominal open circuit terminal impedance of l000 ohm.

708.07 Installation

The signal should be installed, directed and veiled in accordance with published instructions and the engineer's visibility requirement. Each section of the signal should be masked with prescribed materials in an acceptance and workmanlike manner.

Installation shall be made rigid and conform to the installation requirements of Section 706.

708.08 – Measurement and Payment

Method of Measurement - The selective view traffic signal head assembly will be measured in units of each for the number of sections and per number of directions specified per assembly.

Basis of Payment - The contract unit price per assembly shall be based on the following work tasks.

A. Furnish and Install: The unit price to furnish and install a selective view traffic signal head assembly shall consist of an optically programmed traffic signal unit, that conforms to Section 708 of this specification, backplate, hardware, lens, hoods, tools, equipment, labor, incidentals and shipping costs necessary for a complete and accepted installation in accordance with Section 708 of this specification.

End of Section

SECTION 709 - LIGHT EMITTING DIODE (LED) TRAFFIC SIGNAL LAMP

709.01 – Description

Each vehicle signal face indication shall utilize an Incandescent Look light-emitting diode (LED) unit in accordance with the latest issue of the I.T.E. Standard. When replacing lamps in existing standard signal head assemblies, each LED display shall fit into an existing 12 inch aluminum incandescent signal section without altering the existing signal heads or the need for special tools. For flashing, non-standard 8 inch signal head assemblies, each LED display shall fit into an existing 8 inch aluminum incandescent signal section without altering the existing signal heads or the need for special tools. The normal failure of one LED shall not deactivate any other LED. The electronic circuitry shall maintain proper operation with the existing load switches and conflict monitor in the control cabinet.

709.02 – Equipment

A. LED Design shall be in accordance with the following:

1. No more than 2% of total light output shall be lost if one LED fails.
2. The drive current for each individual LED shall not exceed 25mADC.
3. The signal display shall have a wavelength between 500nm to 650nm.
4. The signal intensity shall be in the range of 400 to 500 candelas with a narrow distribution. The horizontal viewing angle shall be between 7° and 30°.

B. Electrical Design shall be in accordance with the following:

1. Operating Voltage shall be between 80 to 135 Volts AC. New signal output at the operating temperature shall not fall below 80% intensity requirements over the operating voltage range.
2. Do not use any fused field wiring.
3. Operating Temperature shall be between -40°C to $+75^{o}$C ambient temperature. The new signal output at nominal voltage conditions shall not fall below 80% of intensity requirements over the operating temperature range.
4. Power consumption shall be 20 watts $\pm$2 watts.

C. Design for LED Solar Flashing Light (Lumastrobe Model SLX-129 or equivalent) shall be in accordance with the following:

1. Solar Panel- Voltage and current shall be 9 V and 580 MA respectively.
2. Battery- Voltage and current shall be 6 V and 10 AH x 2 respectively.
3. Size- 10” W X 24” H X 5-1/2” D + 6” sun shade protrusion.

D. Design for LED Solar Flashing Light (Lumastrobe Model SLX-129S or equivalent) shall be in accordance with the following:

1. Solar Panel- Voltage and current shall be 9 V and 320 MA respectively.
2. Battery- Voltage and current shall be 6 V and 10 AH respectively.
3. Size- 10- 3/8” W X 10- 5/8” H X 6- ¾” D + 6” sun shade protrusion.

709.03 - Warranty

The signal output at nominal operating voltage and temperature conditions shall not fall below 75% of intensity requirements before 5 years of field operation (date of installation).

709.04 - Installation

The signal should be installed, directed and veiled in accordance with published instructions and the engineer's visibility requirement. Each section of the signal should be masked with prescribed materials in an acceptable and workmanlike manner.

Installation shall be made rigid and conform to the installation requirements of Section 709.

709.05 – Measurement and Payment

Method of Measurement - The LED Traffic Signal Lamp will be measured in units of Each (EA) for the lens size and color.

Basis of Payment - The contract unit price shall be based on the following work tasks.

A. **Furnish**: The unit price to furnish a LED traffic signal lamp shall consist of a traffic signal LED unit that conforms to Section 709 of this specification, materials, and incidentals necessary for a complete installation by City forces or others.

B. **Install**: The unit price for an installed a LED traffic signal lamp shall consist of all tools, equipment, hardware, labor and incidentals necessary for a complete and accepted installation, in accordance with Section 709 of this specification.

C. **Furnish and Install**: The unit price to furnish and install a LED traffic signal lamp shall consist of traffic signal LED unit that conforms to Section 709 of this specification, materials, hardware, tools, equipment, labor and incidentals necessary for a complete and accepted installation in accordance with Section 709 of this specification.

End of Section

SECTION 710 - ADA PEDESTRIAN PUSH BUTTON ASSEMBLY

710.01 - Description

The work under this section shall consist of furnishing and installing American with Disabilities Act (ADA) approved pedestrian pushbutton assemblies and signs at the locations shown on the contract drawings or as ordered by the Engineer and in conformance with these specifications.

710.02 – Equipment

A. Advisory Sign: Shall be 9" X 15" MUTCD R10-3e sign message, with the appropriate directional arrow when required as directed.

B. Push button:

1. Shall have a Latching LED indicator that illuminates when the pushbutton is activated and remains illuminated until the start of the walk cycle.
2. Shall be weatherproof and so constructed that any electrical shock under any weather conditions will not be transmitted.
3. Shall be vandal resistant with no moving parts.
4. Installations within the housing shall be so designated that they can be removed as units from the housing for the purpose of inspection and maintenance.
5. Push-button activation elements shall be entirely insulated from the housing and operating buttons.
6. Shall be pressure activated by means of a Piezo driven solid state switch.
7. Shall be capable of withstanding an impact from either a wood/metal rod and/or a hammer.
8. Shall provide an audible beep when the button is pressed and a distinctly different audible beep when the button is released.
9. Shall conform to the following construction and composition specifications:

   a. Body Material
      - Aluminum Powder Coated
      - Available Color options –Black
      - Configurable for installation with PELCO's SE-2000, SE-2039, SE-0267 bodies, or with pole mount identified below
      - Available with an optional second face that indicates (arrow) the direction of the walk phase

   b. Button Material
      - Standard - 316 Stainless Steel
      - Arrow Button – anodized 6061 aluminum, nickel plated black powder coated on area surrounding arrow

c. LED
   - Operating Mode – Latching, where the LED activates only during non-walk phases and stays on until the beginning of the walk phase
   - Luminous Intensity – 0.3 Lux at 1 meter minimum. (Red)
   - Viewing Angle – 155°

d. Piezo Driven Solid State Switch
   - Operating Force – two (2) lbs Maximum
   - Operating Temperature – -30°F to 165°F
   - Operating Voltage – 18 VDC Nominal
   - Operating Life – Greater than 300,000,000 operations
   - Switch Hold Time – 11 seconds Minimum

e. Latching Push Button Control Unit
   - Control unit shall be 170 type card file and fill 2 card slots replacing the existing isolator cards
   - Supports up to four (4) separate pedestrian phases and sixteen (16) push buttons
   - When a button on a phase is activated the control unit illuminates (latches on) the LED on all pushbuttons assigned to that phase
   - Accepts input from pedestrian pushbuttons that operate on 18VDC
   - Monitors the pushbuttons and walk cycles
   - Designed to be installed only in the traffic controller cabinet
   - Operates under 115 VAC power

f. Beeper
   - Sounds simultaneously with the LED illumination
   - Different tones for press and release

C. <u>Pole Mount Body</u>

Body Material
   - Aluminum Powder Coated
   - Available Color options – Yellow, Green, Black, as identified in the design plans
   - Stainless steel nuts inserted into pole mount body to accept Pedestrian Pushbutton mounting screws

The back of the housing shall be flat type to provide a rigid installation. Cable entry shall be through the back so that all wiring may be concealed with no external conduit required, except when indicated on the contract drawings.

D. Push Button Extension Bracket:

- When required extension arm shall be attached to the pole using a curved hub plate – 1 ½" diameter NPS aluminum and shall be drill and taped onto pole shaft
- Push button shall be mounted to a flat back hub plate – 1 ½" diameter NPS aluminum
- Extension arm shall be 1 ½" diameter steel pipe

E. Finish**:** The assembly shall be painted to match the color of the signal pole or be Federal Black in color.

710.03 - Installation

A pushbutton advisory sign (R10-3e) shall be attached to the pushbutton assembly which shall be attached securely to the post or pole as indicated on the contract drawings. The height of the button shall not be less than 3 ½ feet and no more than 4 feet above the sidewalk or curb. When the pushbutton is installed a signal pole where is a raised foundation is present, the pushbutton shall be no greater than 10" from the edge of the foundation. The pushbutton and sign shall be installed on the pole or post on the sidewalk side, parallel to the crosswalk for which the pushbutton controls, and shall be approved prior to drilling the required holes. Installation shall be in accordance with VDOT standard PA-l, 2 or 3 and as indicated on plans and details.

710.04 – Measurement and Payment

Method of Measurement - Pedestrian Pushbutton assembly will be measured in units of Each (EA) per assembly. The costs of the Latching Push Button Control Unit shall be considered incidental and shall be included in the unit price of the pedestrian push button assembly. The contract unit price per assembly shall be based on the following work tasks.

Basis of Payment - The basis of the unit contract price shall vary according to the specified work tasks:

A. **Furnish**: The unit price to furnish a Pedestrian Pushbutton Assembly shall consist of a pushbutton that conforms to Section 710 of this specification. All hardware, signs, shipping costs and incidentals necessary for a complete and installation by City forces or others.

B. **Installation**: The unit price for an installed Pedestrian Pushbutton Assembly shall consist of all tools, equipment, hardware, labor and incidentals necessary

for a complete and accepted installation, in accordance with Section 710 of this specification.

C. **Furnish and Installation**: The unit price to furnish and install a Pedestrian Pushbutton Assembly shall consist of a pushbutton, that conforms to Section 710 of this specification, sign, hardware, tools, equipment, labor and incidentals necessary for a complete and accepted installation in accordance with Section 710 of this specification.

End of Section

SECTION 711 - FIBER OPTIC CABLE

711.01 – Description

This work shall consist of furnishing, installing, auditing and testing fiber optic cable in accordance with these specifications or as directed by the Engineer. It includes all materials associated with fiber optic communications installation including splice closures, terminal closures, fan-out kits and fiber connectorized pigtails.

711.02 – Materials

1. General Description

The material to be provided is single mode fiber optic (SMFO) cable constructed in loose buffer tube form, all dielectric, dry-filled, gel-free, dispersion-unshifted, with low water peak and suitable for underground conduit or lashed aerial installation.

The fibers shall be provided in buffer tubes that protect the fibers. Both buffer tubes and fiber shall be color coded in accordance with Electronic Industries Association (EIA)/Telecommunications Industries Association (TIA) 598-D Standard titled, "Optical Fiber Cable Color Coding". There shall be twelve (12) single mode fibers per buffer tube.

The cable shall contain a dry water-blocking material preventing water intrusion and migration into the outer cable jacket. The water blocking tapes and yarns shall be non-nutritive, dielectric, resistant to mold/fungus, homogeneous, and free from dirt and foreign matter. A dry water blocking compound shall be longitudinally applied around the outside of the central buffer tubes. All cables with water blocking tape shall be constructed in accordance with the requirements of the Electronic Industries Alliance/Telecommunication Industry Association EIA/TIA-455-81B standard and have been subjected to water penetration tests as defined in the EIA/TIA-455-82B standard. The cable construction shall include provisions for easy removal of the protective cable sheath for access to fibers during termination.

2. Fiber Characteristics and Performance

All fiber provided shall be of a good commercial grade and shall meet or exceed the TIA-492-CAAB specification, the U.S. Department of Agriculture Rural Utilities Service (RUS) 7 CFR 1755.900, Telcordia GR-20 standards, International Electrotechnical Commission (IEC) 60793-2-50 Type B1.3, and International Telecommunication Union ITU-T G.652.E requirements. All fiber cable provided under this contract shall be from the same manufacturer using identical specifications and differing only within allowable manufacturing tolerances. The fiber shall, as a minimum, comply with the following:

- Cladding Diameter: 125 ± 0.7 µm
- Core-to-Cladding Concentricity: ≤0.5 µm
- Attenuation Uniformity: No point discontinuity greater than 0.05 dB at either 1310 and 1550 nm
- Fiber Attenuation: 1310 nm ≤ 0.4 dB/Km, 1550 nm ≤ 0.3 dB/Km
- Microbend Attenuation (100 turns, 60 ±2 mm dia.): ≤ 0.05 dB at 1,550 nm
- Zero Dispersion Wavelength (λ o): 1310.0 nm
- Total Dispersion: ≤ 23.0 ps/(nm x Km) from 1,625 nm
- Proof Test: 100 kips per ITU G.657

All fiber optic cable shall be tested using the following TIA/EIA-455 Fiber Optic Test Procedures (FOTPs):

- FOTP-3 "Procedure to Measure Temperature Cycling Effects on Optical Fiber Units, Optical Cable, and Other Passive Fiber Components"
- FOTP-25 "Impact Testing of Optical Fiber Cables"
- FOTP-33 "Optical Fiber Cable Tensile Loading and Bending Test"
- FOTP-41 "Compressive Loading Resistance of Optical Fiber Cables"
- FOTP-78 "Optical Fibers – Part 1-40: Measurement Methods and Test Procedures – Attenuation"
- FOTP-81 "Compound Flow (Drip) Test for Filled Fiber Optic Cable)"
- FOTP-82-B "Fluid Penetration Test for Fluid-Blocked Fiber Optic Cable"
- FOTP-85 "Fiber Optic Cable Twist Test"
- FOTP-104 "Fiber Optic Cable Cyclic Flexing Test"
- FOTP-107 "Determination of Component Reflectance or Link/System Return Loss Using a Loss Test Set"
- FOTP-171 "Attenuation by Substitution Measurement for Short-Length Multimode Graded-Index and Single-Mode Optical Fiber Cable Assemblies"
- FOTP-175 "Optical Fibers – Part 1-42: Measurement Methods and Test Procedures – Chromatic Dispersion"
- FOTP-191 "Optical Fibers – Part1-45: Measurement Methods and Test Procedures – Mode Field Diameter"

Testing shall be performed by the manufacturer. Results of all tests shall be recorded in a log maintained by the manufacturer, which shall be given to the Contractor upon delivery of the fiber. The Contractor shall submit a copy of the log to the Engineer prior to installation of the fiber optic cable.

All fibers in the cable shall be usable and meet required specifications. All optical fibers shall be sufficiently free of surface imperfections and inclusion to meet the optical, mechanical, and environmental requirements to this specification. Each optical fiber shall consist of a doped Silica core surrounded by a concentric silica cladding.

The cable design shall have a life expectancy of thirty (30) years when installed to manufacturer's specifications and when not damaged through accidents and mishandling during maintenance.

3. Outdoor Cable Specifications

The fiber optic cable shall contain a dielectric central strength member (a glass reinforced plastic rod or Kevlar or equivalent) and dielectric outside strength member to prevent buckling of the cable and provide tensile strength. The fiber optic cable shall be capable of withstanding a pulling tension of 600 pounds during installation without increasing the fiber attenuation more than 0.8 decibels per mile and without changing other optical fiber characteristics after the tensile load is removed.

The optical fiber shall be proof-tested by the fiber manufacturer at a minimum of 100 kilo pounds per square inch. The cable shall withstand 25 impact cycles and the change in attenuation shall not exceed 0.2 decibel at 1,550 nanometers when tested according to the requirements as detailed in the TIA/EIA-455-25C standard. The fiber optic cable shall be capable of withstanding a minimum compression load of 125 pounds per square inch when applied uniformly over the length of the sample at the rate of 0.15 to 0.8 inch per minute and maintained for 10 minutes as defined in the TIA/EIA-455-41A standard. The change in attenuation shall not exceed 0.15 decibel during loading at 1,550 nanometers, and no fiber shall display a measurable change in attenuation after load removal.

In buffer tubes containing multiple fibers, the colors shall be stable across the specified storage and operating temperature ranges and not subject to fading or smearing onto each other or into the filling material. Colors shall not cause fibers to stick together. Buffer tubes shall be kink resistant within the specified minimum bend radius. Fillers may be included in the cable core to lend symmetry to the cable cross-section where needed.

The cable core shall contain a water-blocking material. The water-blocking material shall be non-nutritive to fungus, electrically non-conductive and homogenous. It shall also be free from dirt and foreign matter and shall be readily removable with conventional nontoxic solvents. Binders shall be applied with sufficient tension to secure the buffer tubes to the central member without crushing the buffer tubes. The binders shall be non-hygroscopic, non-working and dielectric with low shrinkage.

The cable shall contain at least one ripcord under the sheath for easy sheath removal. Tensile strength shall be provided by a combination of high tensile strength dielectric yarns. The high tensile strength dielectric yarns shall be helically stranded evenly around the cable core.

The cable shall be all dielectric cables (with no armoring) and shall be sheathed with medium density polyethylene (MDPE). The minimum nominal jacket thickness shall be 0.03 inch. Jacketing material shall be applied directly over the tensile strength members and water-blocking material.

The polyethylene shall contain carbon black to provide ultraviolet light protection and shall not promote the growth of fungus.

The jacket or sheath shall be free of holes, splits, and blisters. The cable jacket shall contain no metal elements and shall be of a consistent thickness. Optical cable jackets shall be marked with manufacturer's name, foot markings, month and year of manufacture, number and type(s) of fibers. The actual length of the cable shall be within ±1% of the length markings. The marking shall be in contrasting color to the cable jacket. The height of the marking shall be approximately 0.10 inch. Markings shall be white or yellow and shall be permanent withstanding handling, pulling of cable and maintenance of the cable.

The shipping, storage, and operating temperature range of the cable shall be -30°F to +158° F. The installation temperature range of the cable shall be -22°F to +140°F.

Cable and fiber shall meet interface requirements as specified by Telcordia for single mode splicing equipment, splice closures, terminal closures, and connectors for single mode fiber.

In addition, all fiber optic cable provided for this project shall be:

- Of new production (produced within six (6) months of order date and warehoused by the manufacturer with lot number traceability to production and quality test dates). Any variance request must be submitted to the Engineer, for approval, prior to ordering or installing on any project executed by the City of Norfolk.

- All cable provided shall be from a recognized U.S. manufacturer who is regularly engaged in the production of this material, which has proven fiber optic cable experience, and from which there is a high probability that the same cable and fiber shall be available in the future to support future build-out of the system. No discontinued cable materials, cable not complying with manufacturer's quality standards (i.e. "seconds"), or residual from special cable production runs shall be utilized. Similarly, no left over cable previously shipped to other contract construction sites nor residual cable that the Contractor may have from other projects may be utilized. Only new, standard production fiber optic cable shall be installed on any project executed by the City of Norfolk.

4. Drop Cable Specifications

At locations where aerial splice enclosures are to be provided to connect any devices or traffic signals to the City of Norfolk fiber optic communications network, the Contractor shall furnish drop cable assemblies. The purpose of the drop cable shall be to provide communication circuits from a splice enclosure to communication devices in the equipment/controller cabinet.

The drop cable shall contain at least twelve (12) fiber optic fibers with Type ST connectors to be spliced to the fibers after cable installation. The drop cable to be run from the splice enclosure, down the communication riser, into the cabinet shall conform to the fiber optic cable specifications in this section.

The Contractor may furnish factory assembled drop cables or may make drop cable assemblies. Drop cable assemblies shall conform to the splice loss requirements of these Special Provisions. If factory assembled drop cables are provided, the Contractor shall take steps during installation of the drop cable to ensure that neither the connectorized nor the un-connectorized ends of the cable are damaged.

5. Indoor Cable Specifications

Where fiber optic cable is penetrating a building, National Electric Code (NEC) requirements shall be followed. Fiber cable shall be selected for indoor use that complies with the BFNR or OFNA ratings as required by NEC. Indoor cable shall comply with NEC cable construction, fire code and installation.

Cable selected for indoor use to connect with outdoor cable shall be physically and optically compatible at the fiber level. Cable construction shall comply with EIA/TIA 568-C, “Commercial Building Telecommunications Cabling”. OFNR shall be used for risers and OFNP for plenum installation. All indoor cable shall be dielectric. Plenum cables shall meet UL 910 and riser cables shall meet UL 1666. Installation of indoor cable shall comply with the NEC with installation provisions in accordance with TIA 569-C.

6. Cable Length, Marking and Shipping Requirements

A. General Considerations of Packaging and Shipping:

The completed cable shall be packaged for shipment on reels under the following guidelines:

Each end of the cable shall be securely fastened to the reel to prevent the cable from coming loose during transit. Six (6) feet of cable length on each end of the cable shall be accessible for testing. Both ends of the cable shall be sealed to prevent the ingress of moisture.

Each cable reel shall have a durable weatherproof label or tag providing information as specified in this document. A shipping record shall also be included in a weatherproof envelope showing required information, including factory measured attenuation utilizing OTDR test technique.

The cable shall be in one continuous length per reel with no factory splices in the fiber. Each reel shall be marked to indicate the direction the reel should be rolled to prevent loosening of the cable.

B. Information Accompanying the Reel:

The following information shall be securely attached to the reel as a weatherproof tag:

- Order Number
- Cable Construction (Dielectric, Light Armor, Heavy Armor)
- Job Number
- Type of Cable (Single Mode or Multimode)
- Factory Reel Number
- Cable Installation Application (Aerial/Lashed, Aerial Self-Supporting, Buried/Conduit or Direct Bury)
- Manufacturer's Cable Code
- Ship Date
- Number of Fibers in the Cable
- Manufacturer's Name
- Length of Cable
- Weight of Cable and Reel
- Beginning and Ending Length Markings

A copy of the transmission loss data (attenuation) and other test information shall be included underneath the thermal wrap or lagging. A shipping record shall also be included in a weatherproof envelope showing the above information and also including date of manufacture, cable characteristics, and other information.

The reel shall be permanently marked with reel number, size, weight, lifting/handling safety information, direction of rotation to prevent cable loosening, and other applicable data as required by the contract and shippers.

C. Documentation

The cable shall be supplied with manufacturer's factory test results (including FOTP-78), handling and installation recommendation instructions. Instructions shall be provided with each reel in a weatherproof envelope attached to the reel.

7. Splice and Termination Locations

At a minimum, the following specifications shall be followed when installing splice and/or termination enclosure units, unless otherwise indicated on the Plans or directed by the Engineer.

A. Full Fiber Optic Termination Unit (STC/other building structures)

Fiber optic cables installed at the Smart Traffic Center (STC) in City Hall or within any other City of Norfolk building structure, unless otherwise instructed by the engineer, shall be terminated in a terminal enclosure using recommended practices as defined in Telcordia GR-711. The fiber optic cable termination drawer shall include connector panels and connectors that conform to the requirements of Telcordia GR-769, EIA IS-66, and Telcordia TR-TSY-000949 as they apply to the construction of the fiber optic termination. The contractor shall utilize a drawer configuration for STC (or other building installations) and for equipment cabinet mounting.

Each full termination unit shall accommodate at least 144 termination connections. LC connectors or ST connectors, as instructed by the Engineer, shall be utilized. Factory-connectorized jumpers shall be plugged into the front of the panel on one end and into the fiber optic Ethernet Switch or other device, as instructed by the engineer, on the other. All connectors shall be permanently numbered.

The fiber termination drawer shall:

- Be treated to prevent corrosion.
- Have no sharp corners to damage fiber or maintenance personnel.
- Have all connectors permanently numbered.
- Include the permanent marking on the door or front access panel described in 711.02.8.

B. Fiber Optic Interconnect Enclosure (Field Installations)

Any field equipment cabinet location that is being connected to the City of Norfolk fiber optic communication network shall have a fiber optic interconnect center. Each interconnect center shall conform to the requirements of the City of Norfolk Standard Details (see typical Detail for 'Fiber Optic Interconnect Center') and shall include the following:

- Two (2) connector panels, or more, as directed by the Engineer;
- Two (2) ~~or more~~ splice trays, or more, as directed by the Engineer; and
- One (1) tray housing

1) Tray Housing

   a) All tray housings installed shall:
      - Be 1U height, or as directed by the Engineer
      - Provide strain protection for the fiber, and
      - Contain a sliding tray.
   b) Tray housings in all new cabinets, or existing cabinets, shall be 19" rack-mounted.
   c) Splice tray(s) installed shall accommodate a total of at least 24 fusion splices.
   d) Connector panel(s) shall be installed with ST connectors on both sides of the panel, accommodating a minimum of 12 termination connections.

2) Fiber Splice Trays

   a) Metal trays shall consist of an aluminum base and an aluminum cover. The design of the tray shall provide physical protection for both types of splices.
   b) Each tray shall have strain relief points for securing the buffer tubes or pigtails to the tray. Each tray shall contain organizers which shall hold and protect each splice.
   c) Location of strain relief points within the control cabinet shall allow for proper removal of splice trays for maintenance purposes.
   d) The approximate dimensions of each tray shall be 12 inches by 4 inches by 0.2 inches. Two (2) trays shall be provided in each cabinet. Additional trays shall be provided as necessary to accommodate the number of fusion splices required by the system construction shown in the Plans and/or on the fiber splice details diagram.
   e) Splice trays shall slide into the housing and shall securely lock into place using a mechanical application approved by the engineer.

3) Connector Panels

   a) Mating ST connectors with factory-connected pigtails fusion spliced to the incoming or outgoing fibers shall be plugged into the rear of the panel.
   b) Factory-connectorized jumpers shall be plugged into the front of the panel on one end and into the Ethernet switch, or other device(s), on the other.
   c) All connectors shall be permanently numbered.
   d) When a pigtail that is spliced to a dark fiber is installed to the back side of the bulkhead on the connector panel, a protective cap shall be installed on the other end of the bulkhead connector on the Connector Panel.
   e) Until jumper cables are installed from the connector panel to the Ethernet switch, or other device, the contractor shall maintain protective covers over the optical connectors.

C. Splice Enclosures (Indoor/Outdoor)

The Contractor shall ensure that all splice enclosures, organizers, cable end preparation tools, and procedures are compatible with the fiber optic cable, and are approved by the Engineer.

Indoor splice enclosures shall be wall-mountable, or rack mountable, as instructed by the Engineer. Outdoor splice enclosures shall be designed to be installed underground and therefore should be water-proof. The enclosures shall provide storage for fiber splices, nonspliced fiber, and buffer tubes. All hinges and latching devices shall be stainless steel. The enclosure shall be airtight and prevent water intrusion. Cable entry locations shall accommodate an assortment of cables with outer diameters ranging from 0.45 to 0.55 ±0.05 inches (10-16 mm) without jeopardizing the waterproof characteristics of the enclosure. Enclosure end caps shall be factory-drilled to the proper diameter to accept and seal the fiber optic cable entries.

The splice enclosure shall provide fiber and splice organizers including splice trays and strain relief. Splice trays shall be installed to accommodate at least 24 fusion splices.

Additionally, fiber optic splice enclosures shall:

- Comply with Telcordia GR-711 and all applicable NEC requirements,
- Provide space for future expansion equal to 100% of the initial utilization, Provide fiber optic cable penetration end caps to accommodate a minimum installation of Four (4) fiber optic cables.

8. Other Material Supporting Fiber Installation Procedure

A. General Overview

These specifications cover materials necessary to install and terminate the fiber optic cable as identified in the projects requirements or as instructed by the engineer. It includes the fiber optic cable (specified above), termination enclosures, pigtails, and other miscellaneous mounting and attachment materials.

B. Fiber Optic Pigtails

Where fiber optic pigtails are utilized, fiber cladding type shall be compatible with that of the fiber optic cable. Pigtails shall be factory connectorized with strain relief at the connector. ST type connectors shall be utilized. An ST connector/coupler shall be used on the fiber interconnect center enclosure, spliced to the cable fiber in a splice/organizing tray, unless otherwise directed by the Engineer or shown in the Plans. The pigtail color shall be compatible with the color of the spliced fiber or

labeled in a manner that shall distinguish the pigtail and fiber from all other pigtails or fibers present in the splice/organizing tray. The connector number shall correspond to the cable fiber color/tube number within the attached cable (i.e. orange tube, blue fiber is fiber 13 and connector 13; blue tube, blue fiber is fiber 1 and connector 1).

9. Markings on Equipment

Fiber termination boxes/drawers and splice enclosures shall be permanently marked with manufacturer's name and address, functional name of the unit, model number, part number, and (where applicable) serial number

All connectors or connector panels shall have permanent markings. All fiber optic cables shall include a permanently marked, water and oil proof Mylar or equivalent (non-metallic) band uniquely identifying it in relation to other cables within the system and relating to the As-Built drawings provided to the City of Norfolk by the contractor. Each device shall be uniquely identified and referenced to its installation location. Markings shall facilitate easy understanding of the device's or cable's interconnectivity to the City of Norfolk's Advanced Traffic Management System and/or the City of Norfolk's Fiber Optic Communication Network.

The contractor shall place a permanent tag or marking on equipment providing the unique identifier referenced to location and As-Built drawings. The identifying information shall be permanent, legible and not cryptic (easily understandable and not requiring interpretation). Installation and/or As-Built drawings shall include 'FROM– TO' details and information identifying interconnection, equipment, plug/rack number, cable number, and connector(s) identified on the cable.

711.03 – Material Quality

The fiber optic cable shall be manufactured under ISO 9001 Quality Assurance and/or Telcordia GR 874-CORE, "Reliability and Quality Generic Requirements". All fiber optic cable and other material supplied shall be of new manufacture and shall not have been previously delivered to another construction site. Any variance request for this requirement must be submitted to the Engineer, for approval, prior to ordering or installing on any project executed by the City of Norfolk. Fiber optic cable shall be free from optical splices and compliant with all specifications stated herein when delivered to the contractor and put into stockpile or delivered to the installation site. The contractor shall perform all tests on the fiber optic cables in the presence of the Engineer or the Engineers designated agent. Records of all quality inspections and tests shall be provided to the Engineer before the contractor submits any invoices for material stockpile or work completed. All test results shall be made available to the engineer upon request. When delivered, if the fiber optic cable is inspected and tested at the delivery site and shown to be in non-conformance with these specifications it shall be replaced with new manufactured fiber optic cable complying with these specifications. In no case shall the contractor install fiber optic cable and other related material which:

- Delivered factory test results show non-conformance with these specifications
- At the delivery site, inspections and tests of the fiber optic cable show non-conformance with these specifications.

Should the contractor install fiber which is non-conforming, it shall be replaced at the contractor's own cost with specification compliant fiber optic cable.

711.04 – Installation

1. Scope of Installation

The SMFO cable shall be installed in conduit or overhead as shown in the Project Plans, or as directed by the engineer, and in accordance with manufacturer's installation techniques and procedures. The Contractor shall take every precaution to prevent damage to the SMFO cable during storage and installation. The SMFO cable shall not be stepped on by workers or run over by any vehicle or equipment. The cable shall not be pulled along the ground or over or around obstructions. A bend radius of ten (10) times the cable diameter (unloaded) or twenty (20) times cable diameter (loaded) shall not be exceeded.

It shall be the responsibility of the Contractor to coordinate all overhead and underground construction activities on a continuing basis with each of the utility agencies which have facilities in the immediate vicinity. Where required the contractor shall coordinate with Dominion Power to establish approved pole mounting heights. The documentation of the installation heights from Dominion Virginia Power shall be submitted to the City of Norfolk.

The Contractor shall furnish all attachment hardware and installation guides, including down-guys, necessary to install the fiber optic cable. The attachment hardware and installation guides shall be incidental to the fiber installation and/or the span wire installation and shall not be paid for separately.

2. Allowable Splice Points

All splices shall be fusion splices made in splice trays located in fiber interconnect centers in: equipment cabinets; aerial splice enclosures; splice closures; and stand-alone fiber splice cabinets (wall-mounted or base-mounted), as called for on the Plans. No mechanical splicing shall be allowed. The Contractor shall furnish and install the splice trays, tray housings and enclosures.

SMFO cable runs shall be continuous between allowable splice points in equipment cabinet splice points or approve splice enclosures. The Contractor shall carefully determine the length of SMFO cable necessary to reach from termination point to termination point. Splicing of SMFO cable in conduit, pole bases, manholes, or aerial locations shall not be permitted, unless directed or approved by the Engineer.

For all splices and associated splice enclosures, adequate spare cable shall be provided to allow convenient splicing by a maintenance technician in a vehicle.

3. Splicing Methods

All splicing shall be done by means of a fusion splice technique, and shall not exceed more than 0.1 dB attenuation. Each spliced fiber shall be packaged in a heat-shrink protective sleeve. Bare fibers shall be completely re-coated with a protective RTV gel or similar substance prior to application of the protective sleeve to protect the fiber from scoring, dirt, or micro bending. The fusion splice protective sleeve shall consist of an adhesive inner tube, a stainless steel pin to prevent the splice from bending, and a heat shrink outer tube. All splices shall be performed in accordance with the cable manufacturers and the splice manufacturer's recommendations.

The connector loss for the complete connection to the terminal equipment including connector shall not exceed 0.5 dB. With periodic connector cleaning, this loss characteristic shall be maintained for a minimum of 500 connections.

In equipment cabinets, the incoming and outgoing fibers shall be spliced in splice trays to pigtails with factory-installed ST connectors that connect to the connector panel of the splice tray housing. Each such pigtail shall have an attenuation of not more than 1.0 dB.

4. Requirements for Separate Conduit Entrance into Cabinets.

SMFO cables shall enter the cabinets by means of a separate conduit entrance, unless otherwise approved or directed by the Engineer:

A. For new and existing cabinets mounted on the vertical shaft of existing steel mast arm poles, the Contractor shall install, as shown in the typical details, a new conduit entrance from the pole into the bottom of the cabinet. This conduit entrance shall make use of a UB mogul or similar fitting which accommodates the bending radius of the SMFO cables.

B. For base-mount cabinets, the Contractor shall use a separate conduit entrance which, as shown in the typical details, shall either be an existing spare conduit entrance or a new entrance drilled into an existing foundation or formed into a new or modified foundation.

C. Where the existing cabinet does not have sufficient room for a fiber interconnect center and two or more fiber cables to be stored within the cabinet the SMFO cables shall be spliced in a splice enclosure that is either placed in a junction box or installed aerially.

5. Installation in Conduit

Where shown on the project plans, all SMFO cable shall be installed in new or existing underground conduit. The SMFO cable shall be installed in conduit with other cables only within existing underground conduit segments as called for on the project plans, or as directed by the engineer.

A stranded #8 copper tracer wire shall be installed in conduit as noted in Section 716.03 (7).

Twenty-five (25) feet of each SMFO cable shall be loosely coiled and labeled in each new and existing junction box.

Before the installation of any SMFO cable in conduit is performed, the Contractor shall provide the Engineer with two (2) copies of the cable manufacturer's recommended and maximum pulling tensions. Included with these pulling tensions shall be a list of the cable manufacturers approved pulling lubricants. Only those lubricants, in the quantity recommended by the SMFO cable manufacturer, shall be approved for use.

When installing the cable in underground conduit, the maximum allowable pulling tension for the cable installation by the Contractor shall not exceed 80 percent of the manufacturer's maximum pulling tension. If the cable is pulled by mechanical means, a dynometer (clutch device) approved by the Engineer shall be used to ensure that a maximum allowable pulling tension is not exceeded at any time during installation.

SMFO cable shall not be pulled over edges or corners, over or around obstructions or through unnecessary curves or bends. Approved cable guides, feeders, shoes and bushings shall be used to prevent damage to the cable during installation.

SMFO cable shall not be pulled through any intermediate junction box, manhole, pull box, pole base or any other opening in the conduit unless specifically required by the Engineer in specific facilities. The necessary length of cable to be installed shall be pulled from one junction box, manhole, pull box, pole base, or cabinet to the immediate next downstream manhole, box, pole base, or cabinet. The remaining length of cable to be installed in the next conduit shall be carefully stored in a manner that is not hazardous to pedestrian or vehicular traffic yet ensures that no damage to the cable shall occur. The cable shall be stored in a manner that shall allow that length of cable to be safely pulled into the next conduit. (E.G. figure 8 storing of cable). The Engineer shall approve the storing methods to be used.

Underground splice enclosures shall be connected to an adjacent cabinet through the use of a drop cable configuration. The end of the drop cable to be spliced in the splice enclosure shall be fusion spliced as set forth herein. ST connectors shall be

spliced onto the end of the cable that that has been run into the cabinet, and then connected to the communication device(s).

6. Aerial Installation

Where SMFO cable is to be installed on overhead poles, the Contractor shall exercise care in temporary placement of installation equipment to provide safety to the public and to prevent damage to existing facilities. Should the Contractor cause damage to any existing cables and/or equipment, the Contractor shall immediately notify the Engineer and the affected owner and the Contractor shall repair or have the repair made at no additional cost.

During installation, the Contractor shall provide cable blocks a maximum of every 50 feet to guide the cable and reduce pulling tension. Corner blocks, appropriately sized to ensure that the minimum bending radius of the cable is not violated, shall be provided whenever fiber optic cable must be pulled around a corner. Unless otherwise approved by the Engineer, the maximum pulling tension shall be 600 lbs during installation (short term).

Where the project plans call for aerial installation, the Contractor shall lash the SMFO cable to the designated supporting messenger (which in the majority of cases is new ¼" messenger cable installed by the Contractor).

The SMFO cable shall be lashed to the existing or new messenger cable with aluminum wrapping tape spaced at intervals not to exceed 15 inches or with .06 inch (minimum diameter) galvanized steel spiral cable wrap. Wrapping tape, if used, shall be .05 inches x .30 inches. At least four (4) wraps of tape turns shall be used per interval. Lashing shall be accomplished in a manner that results in the wire and cable appearing to be an integral part of the support cable.

The SMFO cable shall be double-lashed when the SMFO cable crosses controlled access facilities and railroads

At locations shown on the project plans, the Contractor shall provide spare cable for restoration purposes by backlashing cable. The Contractor shall furnish and install cable guides (aerial snow shoes) to maintain the proper bending radius on both ends of the backlashed segment at no additional cost to the City.

711.05 – Fiber Optic Communication Cable Testing

1. General

The times and dates of all tests shall be approved by the Engineer. The Contractor shall conduct all tests in the presence of the Engineer or the Engineer's authorized representative. Testing shall only take place on weekdays which are official working days of the City of Norfolk Division of Transportation and during normal working hours unless otherwise approved by the Engineer.

The Engineer reserves the right to examine and test any and all materials furnished and/or installed by the Contractor to determine if they meet the requirements of these Special Provisions or any Project Plans contracted as a project with the Contractor. If any material used in the construction of any project does not meet these requirements, the Contractor shall replace such defective or insufficient parts and material at no cost to the City of Norfolk. Rejected equipment may be offered again by the Contractor for retesting provided all non-compliance has been corrected and the equipment has been pretested by the Contractor.

Testing of Contractor-furnished and installed hardware and equipment shall be conducted as described below. All tests specified herein shall be successfully conducted prior to Final Acceptance of the Project or task under any contract with the City of Norfolk. All test equipment shall be provided by the Contractor unless otherwise provided herein or as instructed/provided by the Engineer or the Engineer's authorized representative.

The Contractor shall perform the tests and document the test results. When the tests are completed, whether successful or not, the test results shall be furnished to the Engineer or the Engineer's authorized representative. All test documentation forms shall be submitted to the Engineer for approval prior to conducting the tests.

When the contractor is installing fiber optic cable that has been provided by the City the contractor shall be required to perform all the testing and documentation requirements identified herein.

2. Communication Cable Testing

Fiber Optic Cable provided to the City of Norfolk under these specifications shall have been pretested in accordance with the EIA/TIA Fiber Optic test procedures listed below and as required by Telcordia GR-20. Proof of successful testing shall be supplied by the Contractor.

A) On-Reel Attenuation Test

An on-reel attenuation test shall be performed on each fiber of each SMFO cable as furnished by the manufacturer for this project. This test shall be an end-to-end attenuation test performed with a high resolution OTDR. The attenuation measurement of any single mode fiber shall not exceed 0.4 dB per kilometer at 1310 nm. Additionally, fiber inclusions manifested as attenuation spikes on the OTDR shall not exceed 0.5 dB or 50 percent to the total measured attenuation in the cabled fiber, whichever is less. Only one (1) inclusion perturbation shall be allowed per cable length.

Tests shall be performed "on-reel" for each fiber of each SMFO cable as furnished by the manufacturer for this project. Except for the access to and the test preparation of any one end of the SMFO cable to be tested, the Contractor

shall preserve the cable in its originally-shipped condition. Except as noted, the entire reel of cable shall be rejected and shall not be used on this project if any fiber of the cable fails the on-reel cable attenuation test. The rejected cable shall be replaced at the Contractor's expense.

B) Cable Segment Attenuation Test

An attenuation test shall be performed on each fiber of each terminated SMFO cable segment installed by the Contractor as part of this project. This test shall be an end-to-end attenuation test performed with a high resolution OTDR. Installed and terminated cable segments shall be tested, from connectorized-end to connectorized-end. During testing, both ends of the segment shall be disconnected from the mating connectors of their designated electronic device terminals. SMFO cable discontinuities shall not exceed 0.2 dB per 300 feet of fiber. SMFO connector losses shall not exceed 0.75 dB per mating connector pair. SMFO splice losses shall not exceed 0.1 dB per installed fusion splice. All OTDR testing shall comply with the EIA/TIA-455-78 standard.

C) Circuit Continuity and Attenuation Test

The Contractor shall conduct tests on all optical circuits and shall document these tests. Attenuation tests shall be conducted utilizing OTDR techniques per FOTP-78. Any fiber optic link which exceeds attenuation design (fiber link attenuation plus splices attenuation plus connector loss) by more than 10 percent shall be investigated by the Contractor to determine the cause of excessive attenuation. Corrective action shall be taken to provide a circuit compatible with optical transceiver loss budget plus a 20 percent margin for aging.

D) Drop Cable Testing

All tests described above shall also be conducted for the drop cables.

Tests shall be performed for each fiber of each SMFO cable installed by the Contractor as part of the Contract. Cable segment testing shall be performed as each cable segment (a segment being any continuous run of cable without splices or terminations) is installed and terminated. The cable segment shall be rejected if any fiber of the SMFO cable segment fails testing. Rejected cables shall be removed and replaced by the Contractor at the Contractor's expense. The Contractor shall conduct the entire test series again on any cable segment that is replaced.

711.06 - MEASUREMENT AND PAYMENT

Measurement - The contract unit price for fiber optic cable shall be measured in linear feet, from connection point to connection point, for the size, and number of conductors, specified on the plans. For auditing of fiber optic cable for a proposed project the contractor shall be paid in hours.

Basis of Payment - The measurement and basis of the unit contract price shall vary according to the specified work tasks.

1. Furnish Communications Cable - The unit price furnished shall include linear feet (LF) of the specified fiber count (12-, 24-, 48-, and 96-count), cable testing, cable cost that conforms to Section 711 of these specifications.

2. Install Communications Cable - The unit price installed shall include all labor, tools, equipment, connectors, splice enclosures, fittings, cable testing, and incidentals necessary for a complete and accepted installation of linear feet (LF) of fiber cable supplied by the City of Norfolk.

3. Furnish and Install Communications Cable - The unit price for furnishing and installing per linear foot (LF) of the specified fiber count (12-, 24-, 48-, and 96-count) shall include wire, conforming to Section 711 of these specifications, all hardware required for installation, connectors, labor, tools, equipment, splice enclosures, fittings, cable testing, and incidentals necessary for a complete and accepted installation.

4. Furnish and Install Drop Cable - The unit price for furnishing and installing linear feet (LF) of the specified drop cable count (12-, and 24-count) shall include wire, conforming to Section 711 of these specifications, all hardware required for installation, connectors, pigtails, labor, tools, equipment, fittings, cable testing, and incidentals necessary for complete and accepted installation. The fiber splice enclosure facilitating the connection of the Drop Cable shall be measured in units of each (EA) and paid for separately.

5. Fusion Fiber Optic Cable Splice - The unit price for fusion splicing single mode fiber optic cable shall be measured in units of each (EA) and paid for at the contract unit price. The contract unit price shall include the specified splicing method, all materials, labor, equipment, connectors, fan-out kits, adapters, cable testing (including OTDR traces before and after installation and splicing of the fiber optic cable), and incidentals necessary for a complete and accepted installation.

6. Furnish and Install Full Fiber Optic Termination Unit - The unit price for furnishing and installing Full Fiber Optic Termination Units shall be measured in units of each (EA) and pad for at the contract unit price. The contract unit price shall include any termination drawers, connector panels, connectors, other materials, labor, equipment, fan-out kits, adapters, cable terminations, and all work needed to connect and terminate fiber cables to the termination unit with all incidentals necessary for a complete and accepted installation.

7. Furnish and Install Fiber Optic Interconnect Enclosure - The unit price for furnishing and installing Fiber Optic Interconnect Enclosures shall be measured in units of each (EA) and paid for at the contract unit price. The contract unit price shall include any tray housings, splice trays, termination drawers, connector panels,

connectors, other materials, labor, equipment, fan-out kits, adapters, cable terminations, fusion splices, and incidentals necessary for a complete and accepted installation.

8. Splice Enclosure (Indoor) - The unit price for furnishing and installing indoor, wall-mountable splice enclosures shall be measured in units of each (EA) and paid for at the contract unit price. The contract unit price shall include any tray housings, splice trays, other materials, labor, equipment, fusion splices, and incidentals necessary for a complete and accepted installation.

9. Splice Enclosure (Outdoor) - The unit price for furnishing and installing outdoor, underground or aerial splice enclosures shall be measured in units of each (EA) and paid for at the contract unit price. The contract unit price shall include any tray housings, splice trays, other materials, labor, equipment, fusion splices, and incidentals necessary for a complete and accepted installation.

10. Furnish and Install Fiber Optic Communications Cable Riser – The unit price for furnishing and installing a fiber optic communication cable riser shall be measured in units of each (EA) and paid for at the contract unit cost. The contract unit price shall include the riser, seal-tight coupling, mounting of the riser to the identified support structure, extending the riser into the nearest existing junction box or a new junction box as detailed in the project plans. The riser shall be of a material specified by the Engineer.

11. Fiber Optic Cable (Unwrap Lashing) – The unit price for unwrapping lashing shall be measured in units of Linear Feet (LF) and paid for at the contract unit price. The contract unit price shall include all materials, labor and equipment necessary for a complete and accepted installation.

12. Fiber Optic Cable (Rewrap Lashing) – The unit price for rewrapping lashing shall be measured in units of Linear Feet (LF) and paid for at the contract unit price. The contract unit price shall include all materials, labor and equipment necessary for a complete and accepted installation.

13. Provide OTDR Traces – Normally OTDR traces are incidental to the installation or relocation of fiber optic cables. When requested by the Engineer, OTDR traces may be required on existing fiber optic cables or for troubleshooting purposes. The unit price for providing OTDR traces (based on an averaged A-B & B-A test procedure) on a fiber optic cable shall be measured in units of Each (EA) and paid for at the contract unit price. The contract unit price shall include all materials, labor and equipment necessary for a complete and accepted OTDR fiber test.

14. Optical Light Meter Testing – Normally Optical Light Meter tests are incidental to the installation or relocation of fiber optic cables. When requested by the Engineer, Optical Light Meter tests may be required on existing fiber optic cables or for troubleshooting purposes. The unit price for providing optical light meter testing

shall be measured in units of Each (EA) and paid for at the contract unit price. The contract unit price shall include all materials, labor and equipment necessary for a complete and accepted fiber run testing.

15. Prepare Fiber Audit: When requested by the Engineer, a fiber audit may be required on existing projects or proposed projects. The unit price for preparing fiber audit shall be measured in units of Hours (HR) and paid for at the contract unit price. The contract unit price shall include all materials, labor and equipment necessary for a complete and accepted fiber audit.

End of Section

SECTION 712 - MAST ARM ASSEMBLY STANDARD

712.01 - Description

The traffic signal pole mast arm assembly and lighting pole assembly standard shall conform to contract drawings and specifications, VDOT specifications and shall be Union Metal Design No. 50700 or approved equal. The work under this section shall consist of supplying, designing, and installing a combination traffic signal/mast arm pole, luminaire assembly, street light pole, and CCTV pole.

712.02 - Design

The pole and mast arm shall consist of:

A. A tapered steel monotube shaft complete with anchor base, anchor bolts reinforced handhole, cast pole top cap, and steel flange plate assembly for mounting the mast arm.

B. A tapered steel arm complete with a mounting flange plate, hanger clamp, and outlet having a one inch inside diameter rubber grommet for wiring each signal, and a removable end cap.

C. All casting shall be clean, smooth, with all details well defined and true pattern.

D. All components of the mast arm assembly shall be designed to withstand pressure created by winds of at least 110 mph in accordance with 2001-4th Edition of AASHTO “Standard Specifications for Structural Supports for Highway Sign, Luminaires, and Traffic Signals”.

E. Use fatigue category I for all structures on routes where speed limit is greater than 45 MPH with an arm 60’ or longer.

   Use fatigue category II for all structures on routes where speed limit is greater than 45 MPH with an arm less than 60’ and routes with speed limit of 45 MPH and less with an arm 60’ or longer.

   Use fatigue category III for all structures on routes where speed limit is 45 MPH and less and arm less than 60’.

   Truck induced gust loads shall be excluded for fatigue design for all mast arm structures.

F. The design of mast arm and pole shall accommodate all the signs as shown on the design plans and at a minimum at least one (1) City of Norfolk standard metro street name sign panel [varies" (not to exceed 72"minimum size) x 18"], located over the center lanes of the approach

and one (1) traffic signal sign (minimum size 24” x 30”) located at the end of the mast arm.

712.03 – Materials

A. **Shaft**

The shaft shall be fabricated from only one length of steel of no less than No. 7 Manufacturers Standard Gauge, and shall conform to the requirement of ASTM A595 Grade A. The shaft shall have one longitudinal weld; no transverse welds will be permitted. Welds and joints shall be waterproof and shall fully develop the ultimate strength of the pole. Welds shall be ground or cold rolled smooth to a uniform finish.

The shaft shall have a handhold (with an opening area of at least 26 square inches) reinforcing frame complete with cover and grounding nut located near the base to facilitate wiring. The flange plates shall have a deburred 2 l/2" diameter wiring hole and four tapped holes for flanged bolts. The shaft shall be circular in cross section and shall have a uniform taper of not more than 0.l4" per foot of length from the base to the top. The shaft shall have minimum yield strength of 60,000 P.S.I. after fabrication.

A J-hook wire support shall be welded inside near the top of the shaft. The cast pole top shall be secured in place with set screws.

For combination type poles where indicated on contract plans, an opening shall be furnished near the top of the shaft to provide a cable entrance from the shaft into the luminaire bracket arm. A special steel adapter shall be welded into this opening, providing a smooth cable guide for wiring and support for the attaching plate which is welded to the luminaire bracket arm. The luminaire arm shall be furnished with a 400-watt high-pressure sodium lamp in a "Cobra" head type enclosure as specified by Dominion Virginia Power.

B. **Anchor Base**

Each shaft shall have a one-piece cast steel anchor base of adequate strength, size and shape secured to the butt end of the shaft by two continuous electric arc welds. The casting shall conform to ASTM A-36 Grade A. The anchor base shall telescope the shaft and the one weld shall be on the inside of the base at the end of the shaft while the other welds shall be on the outside at the top and the base. The two welds shall be approximately two inches apart and the design shall be such that the welded connection will develop the full yield strength of the shaft.

The base shall be provided with six (6) holes to receive the anchor bolts, and four tapped holes for attaching the covers. Six (6) removable covers for the anchor bolts shall be provided with each base, and each cover shall attach to the upright portion of the body of the base by means of one hex head cap screw.

C. **Monotube Mast Arm**

The mast arm shall be made of steel not less than #7 Manufacturers Standard Gauge, and shall conform to the requirements of ASTM A595 Grade A. For arms up to 40' in length, the mast arm shall be made of one length of steel. For arms lengths greater than 40', the arms shall be made in two pieces which shall assemble by a metal pipe dowel piece that fits inside the two pieces and is welded at the joint. The joint shall be secured against movement with a through bolt or stud and locknuts on both sides of the joint line. The flange plate shall have four holes for the four tapped holes the mounting plate on the pole. Each mast arm shall have wire outlet holes on the bottom surface, with rubber grommet, located at each signal portion. A pressed steel removable cap shall be attached to the end of the arm by a screw. For each required signal, a clamp and clevis with 11/l6" diameter hole shall be furnished, complete with 5/8" diameter hinge bolt with nuts.

D. **Anchor Rods**

Six high-strength steel anchor rods conforming to ASTM F1554, Grade 55, and capable of resisting at yield strength stress, the bending moment of the shaft at its yield strength stress.

Anchor rods shall include as a minimum, one leveling nut, two flat washers, one compressible-washer-type and one hex nut.

Each anchor rod shall have an "L" bend at the bottom, and shall be threaded at the other end for a minimum length of six inches. The threaded ends of the bolts shall be galvanized in accordance with ASTM Al53.

E. **Luminaire and Luminaire Arm**

The luminaire if specified or indicated on the construction plans shall be made by the same manufacturer as the traffic signal pole.

The luminaire arm shall conform to the same material and design.

The luminaire arms shall be at least 2 inches O.D. and accept 2" slip-fitter luminaries.

The fixture shall be supplied and installed by others.

The material and installation of street light cable shall confirm to Section 750.

F. **Disconnect Box**

A disconnect box shall be installed on the mast arm pole adjacent to the controller cabinet. The box shall conform to VDOT Road and Bridge Specifications 2007, Section 238.02 (h) 1. for safety switches.

712.04 – Finish

The finish shall conform to the requirements as specified in the contact plans and specifications according to the following types:

A. **Type A - Galvanized**

All steel components, nuts, bolts and fasteners shall be hot-dipped galvanized in accordance with ASTM A153. Shafts and arms shall be galvanized inside and out in accordance with ASTM A123.

B. **Type B – Painted Green**

1. Finish

The finish shall conform to the requirements as specified in the contract plans and specifications according to the following:

a. All components, nuts, bolts, screws shall have shop painted finish coat.

b. The color shall be City of Norfolk "Federal Green", Federal Standard Colors No. 14062, Federal Standard 595B or “Black”, Color Number FS 27038, Federal Standard 595B.

c. The finish coating shall be a six stage chemical treatment for an electrostatic applied fusion bonded polyester powder coating. The polyester protective coating shall be one coat, minimum 4 mils thick, and heat curable, thermosetting powdered coating.

d. The polyester coating shall be checked for continuity using 67-1/2 volt wet sponge detector to check for holidays, pinholes and discontinuities. Coating shall be checked and certified.

C. **Type C – Painted Black**

1. Finish

   The finish shall conform to the requirements as specified in the contract plans and specifications according to the following:

   a. All components, nuts, bolts, screws shall have shop painted finish coat.

   b. The color shall be City of Norfolk "Black", Color Number FS 27038, Federal Standard 595B.

   c. The finish coating shall be a six stage chemical treatment for an electrostatic applied fusion bonded polyester powder coating. The polyester protective coating shall be one coat, minimum 4 mils thick, and heat curable, thermosetting powdered coating.

   d. The polyester coating shall be checked for continuity using 67-1/2 volt wet sponge detector to check for holidays, pinholes and discontinuities. Coating shall be checked and certified.

2. Installation

   Installation shall conform to manufacturer's recommended procedures, Steel Structures Painting Council (SSPC) Specifications and VDOT Specifications Sections 411.04(b), 411.03(c) and 411.07.

712.05 - Certification

Material certification consisting of physical and chemical properties of the castings shall accompany the material submittal.

712.06 - Warranty

The standard assembly shall be guaranteed from any defects and workmanship for a minimum of two years at installation.

712.07 - Installation

A. The standard assembly shall be securely bolted to the prepared foundation in a manner so that, after all signals, hardware, and luminaries have been installed, the shaft shall be plumb. Stainless steel shims shall be used, if necessary for raking.

B. All exposed edges of the plates which make up the base assembly shall be finished smooth and all exposed corners of such plates shall be neatly rounded to l/8" radius, unless otherwise shown on the plans.

C. Each standard assembly shall be effectively grounded using a #6 copper wire attached to a pole by a stainless steel bolt and to the ground rod by a square head bolt clamp.

D. There shall be NO grouting around the pole base and the top of the foundation.

E. The completed assembly shall be effectively weatherproof with no uncovered openings.

F. The mast arm(s) shall be securely attached to the shaft and positioned as indicated on contract plans or directed by the Engineer.

712.08 – Measurement and Payment

FOR BIDDING PROPOSES ONLY (for Signal IDQ contract only)

The following design guidelines should be used when estimating the unit costs for the following poles. Actual conditions and designs may vary slightly but no additional cost will be awarded to the Contractor unless approved by the Engineer.

Mast Arm Assembly (VDOT Std MP-1) - Item cost for mast arm poles will be broken out for every 10 feet of arm length. Mast Arm Assembly can be either VDOT Standard MP-1 or City of Norfolk Downtown Standard. Each mast arm shall be designed for at least two, one-way, 12 inch signal assemblies spaced at 12 feet apart (one five section signal at the end of the arm, and one 3 section signal). The mast arm shall also be designed with at least one 18"x 90" street name sign and one 24" x 30" MUTCD sign at the five section signal. For each ten feet of additional arm length add one three section signal assembly and 2 feet of luminaire arm length. The combination poles shall have a luminaire mounting height of 30'-0" and an arm length of 12'-0". Mast arm poles will not include decorative bases. **FOR DOWNTOWN STANDARD POLES THE FINISH WILL BE TYPE B, THE LUMINAIRES WILL BE 12 INCHES AND THE POLE CAP WILL BE A CAST ALUMINUM FINIAL (SEE DETAIL IN APPENDIX).**

CCTV Pole - CCTV poles will be in accordance with the CCTV pole detail in the Appendix.

Street Light Pole – Street Light poles will be a City of Norfolk Downtown Standard pole and be supplied by City for installation.

Method of Measurement: A mast arm assembly, CCTV pole and street light pole will be measured in units of Each (EA) for the type specified on the plans.

Basis of Payment: The contract unit price per assembly shall be based on the following work tasks.

A. **Furnish**: The unit price to furnish a mast arm assembly shall consist of the shaft, anchor base, anchor rods and bolts, monotube mast arm, all hardware, template, shipping costs and incidentals necessary for a complete installation by City forces or others.

B. **Install**: The unit price for an installed mast arm assembly shall consist of all tools, equipment, hardware, labor, design of foundation and incidentals necessary to for a complete and accepted installation, in accordance with Section 712 of this specification.

C. **Furnish and Install**: The unit price to furnish and install a standard mast arm assembly shall consist of shaft, anchor base, anchor rods and bolts, monotube mast arm material, hardware, template, tools, equipment, labor, shipping costs and incidentals necessary for a complete and accepted installation in accordance with Section 712 of this specification.

   The unit price to furnish and install a CCTV pole shall consist of shaft, anchor base, anchor rods and bolts, hardware, template, tools, equipment, labor, shipping costs and incidentals necessary for a complete and accepted installation in accordance with Section 712 of this specification.

End of Section

SECTION 713 - FINISHING STRUCTURES

713.01 – Description

This work under this section describes the minimum requirements for preparing and coating ferrous metal surfaces on existing structures.

713.02 - Finish

The finish shall conform to the requirements as specified in the contract plans and specifications according to the following type:

Type B Green

1. Finish

   a) All attached signs, banding material, or other attachments shall be removed prior to painting the structure. The attachments shall be relocated to the same location within 72 hours after removing the objects.

   b) The finish shall conform to the requirements as specified in the contract plans and specifications according to the following:

      1) All steel components, nuts, bolts, screws shall be field painted finish in accordance with Steel Structures Painting Council (SSPC) Paint Application Specification No. 1 (PA 1) and PA Number 3.

      2) The color shall match Federal Color 14062. A color swatch shall be submitted on a 12" x 12" masonite board prior to commencing work.

      3) The primary protective coating shall be a high build, high volume solids (minimum 76% solids), self-priming epoxy, polyamide, semi-gloss finish with a one to one mixing ratio, and VOC compliant, Amerlock 400 or equal, the color shall match Federal Color 14062 as specified on the plans.

      4) The paint shall be applied to a dry film thickness of 5 mils or more and have the following minimum performance characteristics:

         - Salt Spray (ASTM B117) for 3000 hours - no face blistering

- Impact Resistance (ASTM D2794) Direct 24 in-lb; Reverse 6 in-lb

- Abrasion Resistance (ASTM D4060) 1 kg load/1000 cycles 102 mg weight loss.

- Humidity (ASTM D2247) for 750 hours with no face corrosion or blistering.

- Immersion in fresh water for 1 year with no blistering.

c) The topcoat shall be high volume solids (minimum 68%), VOC compliant, semi-gloss to gloss, aliphatic polyurethane, Amershield polyurethane or equal, Commodity number 14062, shall be applied to a thickness of 3 mils or more and have the following minimum performance characteristics:

- Salt Spray (ASTM B117) for 1000 hours - no face blistering

- Impact Resistance (ASTM D2794) Direct 130 in-lb; Reverse 50 in-lb

- Abrasion Resistance (ASTM D4060) 1 kg load/1000 cycles 62 mg weight loss.

- Humidity (ASTM D2247) for 750 hours with no face corrosion or blistering.

Type C Black

1. Finish

a) All attached signs, banding material, or other attachments shall be removed prior to painting the structure. The attachments shall be relocated to the same location within 72 hours after removing the objects.

b) The finish shall conform to the requirements as specified in the contract plans and specifications according to the following:

1) All steel components, nuts, bolts, screws shall be field painted finish in accordance with Steel Structures

Painting Council (SSPC) Paint Application Specification No. 1 (PA 1) and PA Number 3.

2) The color shall match Federal Color FS 27038. A color swatch shall be submitted on a 12" x 12" masonite board prior to commencing work.

3) The primary protective coating shall be a high build, high volume solids (minimum 76% solids), self-priming epoxy, polyamide, semi-gloss finish with a one to one mixing ratio, and VOC compliant, Amerlock 400 or equal, the color shall match Federal Color FS 27038 as specified on the plans.

4) The paint shall be applied to a dry film thickness of 5 mils or more and have the following minimum performance characteristics:

- Salt Spray (ASTM B117) for 3000 hours - no face blistering
- Impact Resistance (ASTM D2794) Direct 24 in-lb; Reverse 6 in-lb
- Abrasion Resistance (ASTM D4060) 1 kg load/1000 cycles 102 mg weight loss.
- Humidity (ASTM D2247) for 750 hours with no face corrosion or blistering.
- Immersion in fresh water for 1 year with no blistering.

c) The topcoat shall be high volume solids (minimum 68%), VOC compliant, semi-gloss to gloss, aliphatic polyurethane, Amershield polyurethane or equal, Commodity number FS 27038, shall be applied to a thickness of 3 mils or more and have the following minimum performance characteristics:

- Salt Spray (ASTM B117) for 1000 hours - no face blistering
- Impact Resistance (ASTM D2794) Direct 130 in-lb; Reverse 50 in-lb

- Abrasion Resistance (ASTM D4060) 1 kg load/1000 cycles 62 mg weight loss.

- Humidity (ASTM D2247) for 750 hours with no face corrosion or blistering.

2. Installation

   Installation shall conform to manufacturer's recommended procedures, Steel Structures Painting Council (SSPC) Specifications and VDOT Specifications Sections 411.03(c), 411.03(d) and 411.06.

713.03 - Environmental Protection

All structures shall have environmental protection in accordance with VDOT Standard Specifications, Sections 107 and 411.07.

713.04 - Measurement and Payment

A. **Prepare and Paint Existing Structure (Type)** - The unit price shall be measured in units of Each (EA) and the basis of payment shall include all environmental protection, disposal of material, removing and replacing attachment to the pole, all painting material, surface preparation material, labor, tools, equipment, and incidentals necessary for a complete and accepted installation in accordance with these specifications.

B. **Paint Prepared Structure (Type)** - The unit price shall be in units of Each (EA) and the basis of payment shall include all environmental protection, removing and replacing attachment to the pole, disposal of material, all painting material, surface preparation material, labor, tools, equipment, and incidentals necessary for a complete and accepted installation in accordance with these specifications.

End of Section

SECTION 716 – CONDUITS

This work shall consist of furnishing and installing conduit in accordance with these specifications and as shown on the plans or as directed by the Owner. The work specified in this section shall override all conduit references in the 2007 VDOT Road and Bridge Specifications Section 700 – General Traffic Control Devices.

716.01– General

The work under this section shall consist of furnishing and installing conduit of the number, type and size specified and necessary fitting at the locations shown on the Contract Drawings, or as ordered by the Engineer and in conformance with these specifications.

716.02 – Materials

1. Conduit, Couplings, and Fittings

   The three types of conduit for the use in traffic signal work are designated as follows:

   a. Polyvinyl chloride (PVC) plastic conduit, conforming to Underwriters' Laboratories (UL) Standard (Publication 61L-651) and National Electric Code (Article 347), Grade I, and Schedule 40, or Schedule 80 for Rigid PVC; each section shall carry the UL seal of approval.
   b. High Density Polyethylene (HDPE) conduit conforming to PE conduit prescribed in Section 238.02 (d) of the 2007 VDOT Road and Bridge Specifications.
   c. Rigid Metal Type EB conforming to UL Publication UL-6 and NEC Article 348 for Rigid Metallic Conduit, galvanized conforming to ASTM A123; each section shall carry the UL seal of approval.

2. Joint Material

   One coupling of the appropriate type shall be furnished with each length (section) of conduit. Joint material used in connecting two pieces of conduit shall be as specified below:

   TYPE A: For PVC and HDPE conduit the material for the joints shall be slip-fit plastic couplings, designed specifically for such use. The joining material shall be a solvent-cement conforming to ASTM D2564.

   TYPE B: The joint material for rigid conduit shall be threaded couplings and galvanized to ASTM A122, and of the same material as the conduit. The coupling shall be a 3 piece Union type coupling used with a proper sealant which will assure a fully watertight seal.

716.03 – Installation

All installations of conduit shall conform to the following requirements and in accordance with VDOT Standard ECI-1.

1. All conduit, couplings, and fittings installed on the surface of poles or structures or other exposed locations or in concrete structures and foundations shall be the rigid metal type. Exposed conduit installed on a painted surface shall be painted the same color as the structure. The conduit run between a structure and the nearest pull box shall be rigid metal type.

2. Where existing rigid metal conduit systems are to be modified or extended, rigid metal type shall only be installed unless approved by the Engineer.

3. The conduit shall be installed in the locations shown on the Contract Drawings or as ordered by the Engineer. All conduit runs shall be as straight as possible, and shall be installed in a neat and workmanlike manner. All conduits shall be installed parallel to or at right angles to visible lines. No bends will be accepted which are not smooth.

4. Conduits shall be installed so as to be continuous and watertight between outlets. Conduit runs shall have a minimum number of couplings as permitted by standard conduit length and 90 degree bends will only be used when authorized by the Engineer Conduit which has been crushed or in any way deformed shall not be used. Conduits shall be free from kinks or other injuries so as to permit pulling of conductors without damage to the conductors. Conduits shall be installed so that any moisture condensation will drain properly and drainage tees with drip spouts shall be provided where necessary.

5. When obstructions are encountered during installation and conduit cannot be economically located elsewhere, the obstruction shall be bypassed by deflecting the conduit at a rate of at least 10:1. Minimum 4’ radius, maximum 90q bends may be used to avoid obstructions at locations where 10:1 deflection is not possible, provided the least degree bend needed to clear the obstruction is used. Flexible bends may be utilized when needed to facilitate proper location of the conduit, only at locations approved by the Engineer. Conduit runs between any 2 junction boxes shall not employ more than 4 bends, or exceed an angular sum of 270q.

6. Seal conduits containing fiber-optic communications cable with mechanical sealing devices. Seal conduits containing signal cable and loop lead-in wire with moldable duct seal.

7. The ends of all conduits, whether shop or field cut, shall be reamed to remove burrs and rough edges. Cuts shall be made square and true so that the ends will butt or come together for the full circumference thereof. All couplings for metal type conduit shall be tightened until the ends of the conduits are brought together, providing a good electrical connection throughout the entire length of the conduit run. Non-metallic type conduit shall be cut with a hacksaw or other approved tool.

8. Conduit shall be laid to a depth of not less than 18 inches below grade or encased in a concrete envelope. The envelope shall have a clearance of not less than 3 inches below the bottom or the sides of conduit and not less than 6 inches from the top of the conduit. Install longitudinal runs of conduit a minimum of 1 foot from back of curb or 6 feet from edge of pavement in the absence of curb. Where conduit is to be installed within existing sidewalk area, the Contractor shall locate conduit outside of the sidewalk area where possible to minimize disruption to the existing surface, provided the conduit is located within existing public right-of-way. The Contractor shall coordinate with the Engineer to review placement of conduit within sidewalk areas prior to demolition. Sidewalk should be removed by panel; no saw cutting away from existing joints will be permitted.

9. Upon completion, restore surface to like-original condition within seven calendar days of occurrence of damage. Remove all rock and debris from backfill material. Remove excess material from site and compact area. Backfill with excavated material and compact to 95% of original density. Backfill trench at locations along the trench path where non-movable objects, such as rocks and boulders, cannot be avoided.

10. Upon completion of conduit installation, each conduit run or any existing conduit used shall be tested for obstructions by means of a rigid or flexible mandrel having a diameter of at least 80 percent of the inside conduit diameter, pulled through each conduit run in the presence of the Engineer. Any obstructions shall be removed and conduit repaired at no additional cost to the owner. After testing, individual conduit runs shall be equipped with an 8-gauge stranded copper tracer-wire with 36-inch loops on each end and bonded (hooked together for a continuous path back to the traffic control cabinet) with clamps AND a pull-rope of nylon or polypropylene with a minimum tensile strength of 500 pounds and with 24 inches of the rope double back into the conduit at each end.

11. Where the Contract Drawings call for the conduit to be connected to an existing electric, telephone or other manhole or existing conduit, the Contractor shall not enter into, or work inside, or physically alter the structure of said manhole or conduit <u>without</u> a representative of the owner present at said manhole/conduit. The Contractor shall give the owner at least 72 hours' notice prior to working on a particular manhole or conduit.

12. Where shown on the Contract Drawings, outlet boxes with conduit properly connected along with concrete conduit hanger, inserts shall be placed accurately and securely in the forms for the concrete. Care should be taken during the placement of concrete around the boxes, conduit and inserts to compact it thoroughly to prevent voids and honeycomb and also to avoid any displacement of the boxes, inserts, or conduit during such operation. Concrete shall conform to the applicable standard specifications or as directed by the Engineer.

13. All necessary fittings shall be sealed to the conduit length by the use of a waterproof cement made by the manufacturer of the conduit or equivalent, and shall be used in strict accordance with the manufacturer's recommendations, as approved by the Engineer.

14. The Contractor shall take extra care to ensure that the conduit is not crushed from the use of heavy equipment over the conduit. If the conduit is found to be damaged, the Contractor shall replace the conduit at his own expense. When the conduit is terminated, it shall be capped with an approved cap and marked unless otherwise shown on the Contract Drawings.

15. The Contractor shall remove pavement, curbs, sidewalks, and driveways as shown on the Contract plans or as directed by the Engineer, sufficient to safely install the conduit. Surplus materials shall be disposed of by the Contractor at his expense as required in "Maintenance of Traffic During Construction." Permanent repairs shall be made to the pavement, curbs, sidewalks, driveways, and unpaved areas as soon as reasonably possible after installation of the conduit. The finished repairs shall be similar to the contiguous areas and shall conform to the Contract plans or other requirements of the Engineer.

16. Conduits terminating in standards or pedestals shall extend not more than two inches vertically above the foundation and shall be sloped toward the handhole opening. Conduit entering through the side of non-metallic pull boxes shall terminate not more than two inches inside the box wall and not less than two inches above the bottom, and shall be sloped toward the top opening to facilitate pulling of conductors. Conduit entering through the bottom of the box shall terminate one to two inches above the bottom and shall be located near the walls of the box to leave a major portion clear for future use. At all outlets, conduits shall enter from the direction of the run.

17. Conduit couplings shall be located not less than six inches from face of foundation.

18. The number of conductors permitted in a single conduit shall not exceed the percentage fill as specified by National Electric Code (NEC).

19. When shown on the plans, the Contractor shall modify the existing controller or pole foundations to allow the new conduit sweeps to enter the foundation in accordance with the following:

    a. Remove concrete by cutting, chiseling or any other approved method as required to install new conduit sweeps without damage to existing conduit(s). The Contractor shall repair any damage incurred at no additional cost to the City.

    b. After removing concrete, the area shall be washed with pressurized water and thoroughly dried with compressed air.

    c. Position new conduit sweeps, and apply an approved concrete bonding compound on the exposed concrete surfaces as recommended by the manufacturer.

    d. Forms shall be positioned so that the profile of the existing foundation above grade will be matched.

    If there are adequate existing conduit sweeps which can be used to install the new conductors, it will not be necessary to modify the foundation. It will be the Contractor's responsibility to ascertain that he may use the existing sweeps.

20. Upon completion of the conduit system for communications, furnish the Engineer with a plan of record drawing detailing the horizontal and vertical locations of the conduit system.

716.03.01 – Unpaved Trenching

Install conduit in all unpaved areas. Rake smooth the top 1 1/2 inches seed with same type of grass as surrounding area. Finish unpaved areas flush with surrounding natural ground.

Pre-Approvals and Minimum Depth Requirements

Obtain approval before beginning drilling operations.

At all points where HDPE conduit will traverse under roadways, driveways, sidewalks, or Controlled Access Areas including entrance/exit ramps, and railroad right-of-way, maintain a minimum depth of 4 feet or 8 times the back reamer’s diameter, whichever is deeper. For an installation that runs parallel to a controlled access area or entrance/exit ramps maintain a minimum depth of 18 inches below finished grade. Maintain a minimum clearance of 18 inches below finished grade when crossing ditch lines. For the following structures, the minimum clearance requirements are:

Man-made Structure	Minimum Clearance Requirement
Bridge foundation	5’ horizontal & 4’ vertical (clearances greater than minimum horizontal should continue to use the 4V:5H ratio, i.e., 10’ horizontal should be no deeper than 8’)
Drainage pipes less than 60”	1’ above or below [while maintaining a minimum depth of 18” below grade]
Drainage pipes greater than 60”	1’ above or 4’ below [while maintaining a minimum depth of 18” below grade]
Box Culverts	1’ above or 4’ below [while maintaining a minimum depth of 18” below grade]
Slope protection	2’ below
Slope protection foundation footing	5’ below

Guarantee the drill rig operator and digital walkover locating system operator are factory-trained to operate the make and model of equipment provided and have a minimum of one year experience operating the make and model of drill rig. Submit documentation of the operators’ training and experience for review at least two weeks before start of directional drilling operations.

Provide a means of collecting and containing drilling fluid/slurry that returns to the surface such as a slurry pit. Provide measures to prevent drilling fluids from entering drainage ditches and storm sewer systems. Prevent drilling fluid/slurry from accumulating on or flowing onto pedestrian walkways, driveways, and streets. Immediately remove all drilling fluids/slurry that are accidentally spilled.

Perform test pit when crossing underground utilities to confirm the vertical elevation of such utilities. Maintain minimum 12 inch separation between utilities unless otherwise approved by the Engineer. Backfill test pit with excavated material and restore to existing conditions. Test pits shall be performed only after notification of such requirements are provided to the Engineer 48 hours in advance of the request.

716.03.02 – Directional Drill Operations

Provide grounding for the drill rig in accordance with the manufacturers’ recommendations.

Place excavated material near the top of the working pit and dispose of properly. Backfill pits and trenches to facilitate drilling operations immediately after drilling is completed.

Use drill head suitable for type of material being drilled and sized no more than 2 inches larger than the outer diameter of the conduit. Direct drill to obtain proper depth and desired destination. Pressure grout with an approved bentonite/polymer slurry mixture to fill all voids. Do not jet alone or wet bore with water.

During drilling operation, locate drill head every 10 feet along drill path and before traversing underground utilities or structures. Use digital walkover locating system to track drill head during directional drilling operation. Ensure locating system is capable of determining pitch, roll, heading, depth, and horizontal position of the drill head at any point.

Once drill head has reached final location, remove head, and install back reamer of appropriate size (no more than 2 inches larger than outer diameter of conduits) to simultaneously facilitate back reaming of drill hole and installation of conduit. Back reamer is sized larger than actual conduits to ensure conduits are not adversely subjected to deviations caused by the original drill operation and are as straight as practical in their final position.

The intent of these Specifications is to limit the diameter of the actual drill shaft/hole so that it is no more than 2 inches larger than the conduit outer diameter. The 2-inch larger diameter may be accomplished during the original bore or during the back reaming/conduit installation process.

Once installation of conduit has started, continue installation without interruption so as to prevent conduit from becoming firmly set. Apply bentonite/polymer slurry mixture during conduit installation.

Upon completion of conduit installation, perform a mandrel test on conduit system to ensure conduit has not been damaged. Furnish non-metallic mandrel with a diameter of approximately 80% of the inside diameter of the conduit in which it is to be pulled through. If damage has occurred, replace the entire length of conduit and ensure that pull line is re-installed.

Drilling Fluids

Use lubrication for subsequent removal of material and immediate installation of the conduit. The use of water and other fluids in connection with directional drilling operations will be permitted only to the extent necessary to lubricate cuttings. Do not jet alone or wet bore with water. Use drilling fluid/slurry consisting of at least 10 percent high-grade bentonite/polymer slurry to consolidate excavated material and seal drill hole walls.

Transport waste drilling fluid/slurry from site and dispose of in a method that complies with local, state and federal laws and regulations.

Conduit Splicing

With prior approval, install a junction box at locations where splicing or coupling of conduit is necessary. Otherwise, splicing or joining of HDPE conduit is prohibited.

Reuse of Existing Conduit

Prior to use of existing conduit, the Contractor shall be responsible for verifying the usability of the conduit for the size cable(s) called for in the Plans and clear any existing debris/blockages in a manner that is approved by the Engineer. Pull rope shall be installed after the conduit has been confirmed clear prior to installing required cables. For any locations where new conductors are to be installed where existing cable is present, the Contractor shall not damage nor affect the usability of performance of the existing cable.

716.04 – Size

1. Conduit from an electrifier to an adjacent pull box shall be two inches minimum diameter.

2. Conduit from a pedestrian push button to the adjacent pull box shall be 2" minimum diameter.

3. Where junction boxes are installed adjacent to the base of signal standard or controller pedestal, conduit installed between the junction box and the signal standard or pedestal shall not be less than 3 inches in diameter.

4. Conduit for detector runs shall not be less than 1 1/2 inch in diameter.

5. All other conduit not specified shall not be less than two inches in diameter.

716.04 – Measurement and Payment

1. Conduits, as referred to within this section, shall include all hardware necessary to make a complete unit with proper coupling, pull wire, ground wire and any other material or equipment necessary for a complete installation.

   Method of Measurement: Conduits will be measured in units in LINEAR FEET (LF) for each size and type as specified on the plans.

   Basis of Payment: The unit price for conduit shall be based on the following work tasks specified on the plans.

   Furnish and Install: The unit price for conduit furnished and installed shall include the conduit that conforms to section 716 of this specification, fittings, couplings, bonding system, joint material, pull wires, plastic spacers when required, tools, equipment, labor, including trenching, backfilling, restoration,

sidewalk repair, and incidentals necessary for a complete and accepted installation in accordance with this section.

2. Pull Wire and Tracer Wire, as referred to within this section, shall include all material or equipment necessary for a complete installation within existing conduit. Wires installed within proposed conduit shall be paid for by the price of the conduit.

   Method of Measurement: Pull Wire and Tracer Wire will be measured in units of LINEAR FEET (LF) for each size and type as specified on the plans.

   Basis of Payment: The unit price for Pull Wire and Tracer Wire shall be based on the following work tasks specified on the plans.

   Furnish and Install: The unit price for Pull Wire and Tracer Wire furnished and installed shall include the materials, tools, equipment, labor, and incidentals necessary for a complete and accepted installation into existing conduit in accordance with this section.

End of Section

SECTION 720 – STEEL STRAIN POLES

720.01 - Description

The standard steel strain traffic signal pole shall conform to contract drawings and specifications, VDOT specifications and shall be designed to carry the loading as specified on the contract drawing and specifications. The steel strain traffic signal pole shall be Union Metal Design No. 50054 or approved equal. The work under this section shall consist of supplying, designing, and installing a traffic signal steel strain pole and foundation.

720.02 - Design

The pole shall consist of the following design parameters:

A. A tempered steel monotube shaft complete with anchor base, anchor bolts and nuts, reinforced handhole with cover, pole cap and J-hook welded inside of pole at top.

B. All casting shall be clean and smooth with all details well defined and true pattern.

C. All components of the strain pole shall be designed to withstand pressure created by winds of at least 110 mph in accordance with AASHTO.

D. Poles shall be designed to permit a clearance of 17 feet above pavement to the bottom of a four (4) foot length signal with a minimum span wire sag of 3% to a maximum of 5%.

E. The shaft shall be circular in cross section and shall have a uniform taper of not more than 0.14 inch per foot of length from the base to the top.

F. The shaft shall have a minimum yield strength of 60,000 psi after fabrication.

G. The design of the pole foundation shall be in accordance with VDOT Specifications, Section 105 (See Specifications Section 770).

720.03 – Materials

A. Shaft

The shaft shall be made of only one CD length of steel no less that #7 Manufacturers Steel Gauge, and shall conform to the requirements of ASTM-A595 Grade A. The shaft shall have one (1) longitudinal weld, and no transverse welds will be permitted. Welds and joints shall be waterproof and

shall fully develop the ultimate strength of the pole. Weld shall be ground or cold rolled smooth to a uniform finish.
The shaft shall have a 4" x 8" handhole reinforcing frame (complete with cover) shall be welded into the shaft distance above the base to facilitate wiring. The reinforced handhole frame shall be tapped 1/2"-13 UNC for grounding purposes. The shaft shall be furnished with a wire inlet complete with grommet.

B. Anchor Base

Each shaft shall have a one-piece cast steel anchor of adequate strength, size and shape secured to the butt end of the shaft by two (2) continuous electric arc welds. The casting shall conform to the requirements of ASTM A-36 Grade A Steel.

The anchor base shall telescope the shaft and the one weld shall be on the inside of the base at the end of the shaft, while the other weld is on the outside at the top of the base. The two (2) welds shall be approximately two (2) inches apart and the design shall be such that the welded connection will develop the full yield strength of the shaft.

The base shall be provided with six (6) holes to receive the anchor bolts, and four (4) tapped holes for attaching the covers. Six (6) removable covers for the anchor bolts shall be provided with each base, and each cover shall attach to the upright portion of the body of the base by means of cone (1) hex head screw.

C. Anchor Bolts

Six high-strength steel anchor bolts conforming to ASTM F1554, Grade 55, and capable of resisting at yield strength stress, the bending moment of the shaft at its yield strength stress, and each fitted with two hex nuts, shall be furnished with each pole.

Each anchor bolt shall have an "L" bend at the bottom, and shall be threaded at the other end for a minimum length of six inches. The threaded ends of the bolts shall be galvanized in accordance with ASTM Al53.

720.04 – Finish

The finish shall conform to the requirements as specified in the contact plans and specifications according to the following types:

A. **Type A - Galvanized**

All steel components, nuts, bolts and fasteners shall be hot-dipped galvanized in accordance with ASTM A153. Shafts and arms shall be galvanized inside and out in accordance with ASTM A123.

B. **Type B – Painted Green**

1. Finish

The finish shall conform to the requirements as specified in the contract plans and specifications according to the following:

a. All components, nuts, bolts, screws shall have shop painted finish coat.

b. The color shall be City of Norfolk "Federal Green", Federal Standard Colors No. 14062, Federal Standard 595B.

c. The finish coating shall be a six stage chemical treatment for an electrostatic applied fusion bonded polyester powder coating. The polyester protective coating shall be one coat, minimum 4 mils thick, and heat curable, thermosetting powdered coating.

d. The polyester coating shall be checked for continuity using 67-1/2 volt wet sponge detector to check for holidays, pinholes and discontinuities. Coating shall be checked and certified.

C. **Type C – Painted Black**

1. Finish

The finish shall conform to the requirements as specified in the contract plans and specifications according to the following:

a. All components, nuts, bolts, screws shall have shop painted finish coat.

b. The color shall be City of Norfolk "Black", Federal Standard Colors No. FS 27038, Federal Standard 595B.

c. The finish coating shall be a six stage chemical treatment for an electrostatic applied fusion bonded polyester powder coating. The polyester protective coating shall be one coat, minimum 4 mils thick, and heat curable, thermosetting powdered coating.

d. The polyester coating shall be checked for continuity using 67-1/2 volt wet sponge detector to check for holidays, pinholes and discontinuities. Coating shall be checked and certified.

2. Installation

Installation shall conform to manufacturer's recommended procedures, Steel Structures Painting Council (SSPC) Specifications and VDOT Specifications Sections 411.04(b), 411.03(c) and 411.07.

720.05 - Certification

Material certification consisting of physical and chemical properties of the castings shall accompany the material submittal.

720.06 - Warranty

The standard assembly shall be guaranteed from any defects and workmanship for a minimum of two years at installation.

720.07 - Installation

A. The standard assembly shall be securely bolted to the prepared foundation in a manner so that, after all signals, hardware, and luminaries have been installed, the shaft shall be plumb. Stainless steel shims shall be used, if necessary for raking.

B. All exposed edges of the plates which make up the base assembly shall be finished smooth and all exposed corners of such plates shall be neatly rounded to l/8" radius, unless otherwise shown on the plans.

C. Each standard assembly shall be effectively grounded using a #6 copper wire attached to a pole by a stainless steel bolt and to the ground rod by a square head bolt clamp.

D. There shall be NO grouting around the pole base and the top of the foundation.

E. The completed assembly shall be effectively weatherproof with no uncovered openings.

720.08 – Measurement and Payment

FOR BIDDING PROPOSES ONLY (for Signal IDQ contract only)

The following design guidelines should be used when estimating the unit costs for the following poles. Actual conditions and designs may vary slightly but no

additional cost will be awarded to the Contractor unless approved by the Engineer.

Strain Pole (VDOT Std MP-2) *(Box Span) - Item cost for strain poles will be broken out for every 50 feet of span width. Each span shall be designed for at least two (2) one-way 12 inch signal assemblies spaced at 10 feet apart with one 5-section signal at the midpoint of the span and one 3-section. The span shall also be designed with at least one 18"x 90" street name sign and one 24" x 30" MUTCD sign at the five section signal.*

Strain Pole (VDOT Std MP-2) *(Diagonal Span) - Item cost for strain poles will be broken out for every 50 feet of span width. Each span shall be designed for at least two (2) one-way signal assemblies, two (2) two-way signal assemblies, and one (1) four-way signal assembly at the midpoint and spaced at 8 feet apart.*

Method of Measurement: A traffic signal strain pole will be measured in units of Each (EA) for the size and height specified on the plans.

Basis of Payment - the contract unit price per traffic signal strain pole assembly shall be based on the following work tasks.

A. **Furnish**: The unit price to furnish a traffic signal strain pole assembly shall consist of the shaft, anchor base, anchor bolts, nuts, washers, flange plates, all hardware, template, shipping costs and incidentals necessary for a complete installation by City forces or others.

B. **Install**: The unit price for an installed traffic signal strain pole assembly shall consist of all tools, equipment, hardware, labor, design of foundation and incidentals necessary to for a complete and accepted installation, in accordance with Section 720 of this specification.

C. **Furnish and Install**: The unit price to furnish and install a standard traffic signal strain pole assembly shall consist of shaft, anchor base, anchor bolts, nuts, washers, flange plates, hardware, template, tools, equipment, labor, and incidentals necessary for a complete and accepted installation in accordance with Section 720 of this specification.

End of Section

SECTION 725 – PEDESTAL POLE AND BASE

725.01 - Description

The pedestal pole and base shall conform to contract drawings and specifications, VDOT specifications and shall be designed to carry the loading as specified on the contract drawing and specifications. The work under this section shall consist of supplying, designing, and installing a pedestal pole and base.

725.02 - Design

The pole shall consist of the following design parameters:

A. A tempered steel monotube shaft complete with anchor base, anchor bolts and nuts, reinforced handhole with cover, pole cap and J-hook welded inside of pole at top.

B. All casting shall be clean and smooth with all details well defined and true pattern.

C. All components of the pedestal pole shall be designed to withstand pressure created by winds of at least 110 mph in accordance with AASHTO latest approved edition.

D. The shaft shall be circular in cross section and shall have a uniform taper of not more than 0.14 inch per foot of length from the base to the top.

E. The shaft shall have a minimum yield strength of 60,000 psi after fabrication.

F. The design of the pole foundation shall be in accordance with VDOT Specifications, Section 105 (See Specifications Section 770).

725.03 – Materials

A. Aluminum Pedestal Pole

The aluminum pedestal pole shall be extruded with the following minimum requirements:

Aluminum Alloy	6063-T6
Tensile Strength, KSI	30
Elongation (% in 2")	25
Standard Wall Thickness	0.237 inches
Outside Diameter	4.50 inches

Threading and deburring shall be in accordance with the basic dimensions of American National Standard Taper Pipe Threads, NPT (ANSI B2.1).

The aluminum pedestal pole shall be free of excess material, heat discoloration, irregular grain spacing, grain patterns, waviness, scratches, burrs or other surface defects.

B. Steel Pedestal Pole

The steel pedestal pole shall be extruded with the following minimum requirements

Standard 4 inch Sch. 40	ASTM A53 Grade B
Tensile Strength, KSI	60
Yield Strength, KSI	35
Weight per Foot	10.79 lbs
Standard Wall Thickness	0.237 inches
Outside Diameter	4.50 inches

Threading and deburring shall be in accordance with the basic dimensions of American National Standard Taper Pipe Threads, NPT (ANSI B2.1).

C. Pedestal Pole Base

Upper end shall be threaded to receive a 4 inch NPT pipe shaft.

Shall be of such design that it may be fastened to a foundation with four (4) anchor bolts located 90 degrees apart on the bottom of the base. There shall be slots in the bottom of the base 1 1/2 inches wide and 2 1/2 inches long measured along the circumference of the bolt circle, allowing a proper fit even if the bolts are placed slightly off center.

Shall accommodate bolt circles of a minimum of 12 inches through a maximum of 14 1/2 inches and anchor bolts with a minimum of 5/8 inches through 1 inch diameter.

It shall be equipped with a removable plastic door. Door opening shall be free of burrs and sharp edges. The door shall be attached to the base using one socket button head screw to prevent unauthorized entry.

The base shall be fabricated free of voids, pits, dents, molding sand and excessive foundry grinding marks. All design radii shall be smooth and intact. Exterior surface finish shall be smooth and cosmetically acceptable by being free of molding fins, cracks and other exterior blemishes.

Shall be fabricated from new aluminum ingot. No scrap materials shall be used. Minimum requirements as follows:

Aluminum Alloy	319	Elongation (% in 2")	l.5
Tensile Strength, KSI	28	Brinell Hardness	70-100
Yield Strength, KSI	14		

Structural Integrity:

In order to prove structural soundness a certification from a recognized independent structural laboratory shall be provided certifying that the base will withstand a bending moment of 10,750 ft. lbs. Such test shall be performed in the following manner:

A force shall be applied to the end of the pipe measured from the bottom of the base in order to produce a moment capacity of 10,750 ft. lbs without breaking, cracking or rupturing in any manner. After the force has been removed, the lever arm shall return within 0.250 inches of its original rest position. All tests shall be made using 4" Schedule 40 Steel Pipe.

DOOR

The door shall be cast from 319 alum alloy. All flat surfaces shall be straight without blisters, buckling or warping. The bottom of the door shall have 2 molded lugs with slots of the proper width and depth to fit the base door opening.

HARDWARE

The base shall be supplied with a set of 4 Anchor Bolts, 3/4" Diameter by 18" length, as specified. Material shall be per ASTM A-572 and galvanized per ASTM A-153. Each bolt shall have (1) Hex Nut and (1) Flat washer.

CERTIFICATION

Material certification consisting of physical and chemical properties of the castings shall accompany the material submittal.

725.04 – Finish

The finish shall conform to the requirements as specified in the contact plans and specifications according to the following types:

A. **Aluminum Pedestal Pole**

TYPE A

Finish Type A shall have a rough surface texture consisting of a uniform grain pattern that is perpendicular to the axis of the pole for the full length of the pole.

TYPE B Green

Finish Type B shall have a textured grain profile having a surface roughness of at least two, but not more than four times the Roughness Average which shall be 250 micro inches.

TYPE C Black

Finish Type C shall have a textured grain profile having a surface roughness of at least two, but not more than four times the Roughness Average which shall be 250 micro inches.

B. **Steel Pedestal Pole**

TYPE A

The pipe shall be galvanized after fabrication and have clean square saw cuts and free of burrs. Galvanizing shall have a minimum of 1.6 oz/ft² after fabrication. Threads shall be heated and brushed to remove excess zinc.

TYPE B Green

Finish

The finish shall conform to the requirements as specified in the contract plans and specifications according to the following:

1. All components, nuts, bolts, screws shall have shop painted finish coat.

2. The color shall be City of Norfolk "Federal Green", Federal Standard Colors No. 14062, Federal Standard 595B.

3. The finish coating shall be a six stage chemical treatment for an electrostatic applied fusion bonded polyester powder coating. The polyester protective coating shall be one coat, minimum 4 mils thick, and heat curable, thermosetting powdered coating.

4. The polyester coating shall be checked for continuity using 67-1/2 volt wet sponge detector to check for holidays, pinholes and discontinuities. Coating shall be checked and certified.

TYPE C Black

Finish

The finish shall conform to the requirements as specified in the contract plans and specifications according to the following:

1. All components, nuts, bolts, screws shall have shop painted finish coat.

2. The color shall be City of Norfolk "Black", Color Number FS 27038, Federal Standard 595B.

3. The finish coating shall be a six stage chemical treatment for an electrostatic applied fusion bonded polyester powder coating. The polyester protective coating shall be one coat, minimum 4 mils thick, and heat curable, thermosetting powdered coating.

4. The polyester coating shall be checked for continuity using 67-1/2 volt wet sponge detector to check for holidays, pinholes and discontinuities. Coating shall be checked and certified.

C. **Pedestal Pole Base**

Octagonal cast aluminum with natural finish or painted as specified in the bid documents. Base shall have a minimum weight of 21 lbs.

TYPE A

Finish Type A shall have a rough surface texture consisting of a uniform grain pattern that is perpendicular to the axis of the pole for the full length of the pole.

TYPE B Green

Type B shall have a textured grain profile having a surface roughness of at least two, but not more than four times the Roughness Average which shall be 250 micro inches.

TYPE C Black

Type C shall have a textured grain profile having a surface roughness of at least two, but not more than four times the Roughness Average which shall be 250 micro inches.

725.05 - Certification

Material certification consisting of physical and chemical properties of the castings shall accompany the material submittal.

725.06 - Warranty

The standard assembly shall be guaranteed from any defects and workmanship for a minimum of two years at installation.

725.07 - Installation

A. The standard assembly shall be securely bolted to the prepared foundation in a manner so that, after all signals, hardware, and luminaries have been installed, the shaft shall be plumb. Stainless steel shims shall be used, if necessary for raking.

B. All exposed edges of the plates which make up the base assembly shall be finished smooth and all exposed corners of such plates shall be neatly rounded to l/8" radius, unless otherwise shown on the plans.

C. Each standard assembly shall be effectively grounded using a #6 copper wire attached to a pole by a stainless steel bolt and to the ground rod by a square head bolt clamp.

D. There shall be NO grouting around the pole base and the top of the foundation.

E. The completed assembly shall be effectively weatherproof with no uncovered openings.

725.08 – Measurement and Payment

Method of Measurement: A pedestal pole and base will be measured in units of each for the size and height specified on the plans.

Basis of Payment - the contract unit price per assembly shall be based on the following work tasks.

A. **Furnish**: The unit price to furnish a pedestal pole and/or base shall consist of the shaft, anchor base, anchor bolts, nuts, washers, flange plates, and paint that conforms to Section 725 of this specification, all hardware, template, shipping costs and incidentals necessary for a complete installation by City forces or others.

B. **Install**: The unit price for an installed pedestal pole and/or base shall consist of all tools, equipment, hardware, paint, labor, and incidentals necessary to for a complete and accepted installation, in accordance with Section 725 of this specification.

C. **Furnish and Install**: The unit price to furnish and install a standard pedestal pole and/or base shall consist of shaft, anchor base, anchor bolts, nuts, washers, paint, flange plates, hardware, template, tools, equipment, labor, and incidentals necessary for a complete and accepted installation in accordance with Section 725 of this specification.

End of Section

SECTION 735 – INTERNAL 170 ETHERNET MODULE

735.01 - Description

This work shall consist of furnishing, installing and testing Internal 170 Ethernet Modules in accordance with these Specifications and as directed by the Engineer. Furnish and install Internal 170 Ethernet Module in the existing controller.

735.02 - Design

The Internal 170 Ethernet Card shall meet the following design requirements.

1. Model 400 modem footprint
2. 100 Base-T RJ45 connector
3. Direct IP addressable
4. Auto Sensing
5. 170 Standard
6. .063", double-sided, FR4, solder masked, with plated through holes, gold-plated finger contacts, conformal coated
7. Operating temperature: -37º C to +74º C Humidity: 0 to 95% (non-condensing)
8. Power Requirements: +12 VDC + 5% @ 75 mA

735.03 – Functional Requirements

The Internal 170 Ethernet Card shall meet the following functional requirements.

1. Network Interface:
    a. Interface: Ethernet 10Base-T or 100Base-TX (Auto- Sensing)
2. Protocols:
    a. TCP/IP, UDP/IP,ARP, SNMP, TFTP, Telnet, DHCP, BOOTP, HTTP and AutoIP
3. Security:
    a. Password protection
    b. 256-bit AES encryption

735.04 – Installation

Install the Internal 170 Ethernet Module in the existing controller in locations shown in the project plans, or as directed by the engineer. Connect Ethernet patch cable to the Ethernet switch as shown in the plans. Secure and neatly route patch cable in the cabinet with appropriate cable ties and strain relief. Provide a minimum of three feet of slack for the cable.

1. Install the Internal 170 Ethernet Modules in the Type 400 modem slot in the 170 controller.

2. Configure as necessary.

3. Provide Ethernet Patch cable and route the cable through the top of the controller cage as shown on the plans.

The Contractor shall be responsible for providing a complete, functional system including all necessary cables and connectors in accordance to the specifications and as specified on the plans. All miscellaneous patch and interconnect cables shall meet the proposed equipment specification requirements and shall meet EIA/TIA telecommunications standards.

735.05 - Warranty

The Internal 170 Ethernet Module shall be warranted against defects in materials and workmanship for a period of two (2) years from the original date of delivery.

735.06 – Measurement and Payment

Method of Measurement: The unit price shall be measured in units of each as the specified work task indicates on the plans.

Basis of Payment: The unit price for an Internal 170 Ethernet Module shall be based on the following work tasks.

A. **Furnish**: The unit price for furnishing an Internal 170 Ethernet Module shall include the interface cabling and training of personnel (if applicable) will be considered full compensation of this work task.

B. **Install**: The unit price for installing an Internal 170 Ethernet Module shall include tools, equipment, labor and incidentals necessary to install a complete and accepted installation in accordance with Section 703. This shall be full compensation of this work task.

C. **Furnish and Install**: The unit price for furnishing and installing an Internal 170 Ethernet Module shall include the tools, equipment, labor, incidental fittings necessary to install the Internal 170 Ethernet Module, and training of personnel (if applicable) will be considered full compensation of this work task.

End of Section

SECTION 750 - SIGNAL, INTERCONNECT, LOOP LEAD-IN, LOOP WIRE and STREET LIGHT CABLE

750.01 – Description

The work under this section shall consist of furnishing and installing of cable of the type, size and number of conductors specified, at the locations shown on the Contract Drawings or as ordered by the Engineer and in conformance with these specifications. The work includes making all electrical connections between the power sources and all electrical equipment installed as a part of this contract.

750.02 – Materials

1. **Signal Cable -** The traffic signal cable shall meet the following requirements for the specified application.

   All cable in conduit shall have a "UL" type THWN insulation and shall conform to the latest requirements of IMSA specification No. l9-l or 20-l (depending on application). The cable shall be No. l4 AWG stranded copper with the number of conductors specified on the Contract plans.

   For installation in conduit the cable shall meet the requirements of IMSA specification No. l9-l, latest version.

   For aerial installation the cable shall meet IMSA Specification No. 20-l.

2. **Communications / Interconnect Cable (copper):** The communications cable shall meet the following requirements for the specified application.

   All interconnect cable installed in conduit shall conform to the latest requirements of REA specification No. PE-39 type BJFA filled cable.

   All interconnect cable installed as aerial cable shall conform to latest requirements of REA specification No. PE-38, type ALP8 air core cable.

   All communications Fiber Optic Cable shall conform to Section 711 of these Specifications.

3. **Service Cable Assembly:** The service cable shall be No. 8 AWG stranded copper, 2 copper cable with 600-volt insulation or as required by the local power company. Color code shall be:

Black or Unmarked	-	Line
White or Gray	-	Neutral

   All service conductors shall have a separate conduit

The service cable assembly shall consist of VDOT Standard SE-3 or SE-4 to closest existing power poles and in accordance with VDOT Section 238. All work to be performed in compliance with Dominion Virginia Power requirements and the NEC.

4. **Lead-In Cable:** Shall be No. l4 AWG, 2-conductor stranded twisted pair shielded cable conforming to IMSA Spec. 50-2-l991 Lead-in.

5. **Loop Wire:** Loop wire shall be no. 12 AWG stranded, 1 conductor conforming to the latest IMSA Specification No. 51-3. Insulation shall be XHHW

6. **Street Lighting:** Shall be No. 10 AWG, 3 conductor stranded copper twisted conductors THWN insulation and conforming to ASTM B3 and B8. All street light conductors shall be installed in a separate conduit.

750.03 – Installation

General

All wiring shall be installed by the Contractor in conformance with all applicable codes and requirements of the City, State, NEC, IMSA, NBFU, and the power company supplying power. All work shall be done in a workmanlike manner by craftsmen experienced in the trade involved. All details of the installation shall be mechanically and electrically correct.

All cables shall be of the type and size shown on the Contract Drawings. The substitution of several cables to attain the required number of conductors will not be permitted.

All cable wiring installation and terminations within the control cabinet shall be considered incidental work.

A UL approved inert lubricant shall be used in placing conductors in conduit.

Conductors shall be pulled into conduit by hand and the use of winches or other power actuated pulling equipment will not be permitted.

All splices shall be capable of satisfactory operation under continuous submersion in water and prevent absorption of moisture in the cable.

Breakaway connectors shall be installed on luminaire conductors and on signal conductors for signal head assemblies on pedestal poles and breakaway poles installed in median and/or islands. Breakaway connectors shall be fused for the hot conductors and nonfused for the grounded conductor. Breakaway connectors

shall be located in the hand hole of the pole. The connector shall be watertight and filled with a oxide-inhibiting compound UL rated for 600 volts. The breakaway connectors shall be approved by the Engineer prior to installation of location and type.

1. **Signal Cable** - Installation

   a. Sufficient signal light conductors shall be provided to perform the functional operation of the signal system, and, in addition thereto, 3 spare conductors of a size equal to the largest signal light conductor in the run, except grounded conductor shall be provided throughout the signal light system, unless otherwise indicated on the plans (which ever is the greatest).

   b. All signal light conductors, except branch grounded conductors shall be run continuously without splices from a terminal block located in a cabinet, compartment, or signal head, to a similarly located terminal block.

   c. The common pedestrian push button shall be separate from the signal light circuit grounded conductors.

   d. Ends of spare conductors shall utilize a wire nut cap connector of adequate size a taped over connector.

   e. At least one foot of slack shall be left for each conductor at each signal or lighting standard, and at least 3 feet of slack at each pull box. A minimum of 3 feet of slack shall be left for each conductor at each splice.

   f. Conductors within fixtures or cabinets shall be cabled together with self-clinching nylon cable ties, waxed lacing or other method permitted by the Engineer.

   g. Conductors shall be permanently identified as to function. Identification shall be placed on each conductor, or each group of conductors comprising a signal phase, in each pull box and near the end of terminate conductors. Identification shall be by direct labeling, tags or bands fastened to the conductors in such a manner that they will not move along the conductors. Labeling shall be by mechanical methods.

   h. All splicing if approved by Engineer shall be done above sidewalk grade.

2. **Communications / Interconnect Cable (copper) –** Installation

   a. All interconnect cable shall have a separate conduit run from inside the cabinet to the terminating point on to another cabinet.

   b. Splicing of underground interconnect cable shall utilize a minimum 25 pair above ground terminal enclosure (VDOT Standard CTE-l).

c. The cable shall begin and terminate using the terminal block which is inside a watertight enclosure or cabinet.

d. Splicing of aerial interconnect cable shall utilize a ready access enclosure that is easy re-accessible, and weather resistant for splices, terminations and service drops. The enclosure shall mount on the messenger cable. The enclosure shall have one end with a branch nozzle and have adequate size to house a 25 pair cable.

e. The covers may be removed and replaced without disturbing cable entrance/sealed nozzle attachment assemblies. The terminal enclosure shall be VDOT Standard CTE-3 or approved equal.

f. Coil 25 feet of interconnect cable installed in underground conduit system having runs of 500 feet or longer in each junction box in the run.

g. The Contractor shall furnish and install "NOR – 1" cable ID tags. All fasteners and tags shall be UV resistant.

3 Service Cable Assembly - Installation

a. The service cable assembly installation shall conform to VDOT Standard SE-3 or SE-4 to closest existing power source and in accordance with VDOT Section 238.

4. Lead-In Cable - Installation

a. Each pair of lead-in wires in the cabinet shall be tagged and identified as to phase and physical location of loop in the roadway.

5. Loop Wire - Installation (see standard Loop Details in Appendix H or plan sheet)

a. Prior to saw cutting, the Contractor shall mark the exact location of the corners of all the loop detectors for approval by the owner.

b. The size of the loop shall be as shown on the Contract Drawings and the location shall not deviate more than plus or minus two feet from the locations shown on the Contract Drawings. A slot shall be made using a power saw having an abrasive or diamond blade 3/8-inch wide. The depth of the slot shall be a minimum of 2 l/2 inches or as indicated on the Contract Drawings and shall extend from the loop to the location shown.

c. The corners of the loop shall be corner-drilled with a l-l/4-inch minimum diameter to full depth as shown on the details, and the sharp edges of the

loop shall be rounded off with a chisel; the slot shall be cleaned of all cutting dust and grit with oil-free compressed air. The slot must be completely dry before inserting the wire. Also, the core drill the point where the curb line and road surface meet. The wire at this location shall have some slack or flex.

d. The entire loop shall consist of one continuous run of No. l2 gauge stranded copper wire with XLPE insulation unless otherwise indicated on the Contract Drawings. The wire shall follow the saw cut to the location shown where it will enter flexible plastic tubing as shown on the installation detail sheet. The flexible tubing shall then be placed in to conduit. The home-run wires shall be twisted together and taped at two-foot intervals from the point where the wire leaves the saw cut and enters the conduit to the nearest handhole, soldered and spliced with a direct bury type splice kit. The twisted wire shall remain together and shall not be coiled at any point. Splices will not be permitted at any point of the loop or lead-in. The twisted-pair shielded lead-in cable shall be grounded at the DETECTOR UNIT ONLY and shall be labeled as ground. The ground at the other end shall be clipped off and be prevented from grounding itself.

e. The saw cuts on all home-runs shall be as shown on the Contract Drawings or as directed by the Engineer. The number of turns of wire shall be checked for slack or raised portions in the roadway slot. A paint mix stick or similar blunt instrument shall be used to push the wire in the slot. A screwdriver or like instrument is not acceptable. The wire shall be held in the slot with pegs or by wrapping tape around the wire a sufficient number of times so that it fills the width of the slot and holds itself at the bottom of the saw cut.

f. The saw cut shall then be filled with sealing compound to a level of approximately l/8 inch below the roadway surface. In no case shall the compound overflow the saw cut and all excess material shall be struck off with a straight edge. The compound shall be applied in accordance with the manufacturer's recommendations.

g. The Loop Sealant shall conform to Section 760.

7. Street Lighting – Installation

a. All street light conductors shall be run continuously without splices from the end of the luminaire arm to the electrical pull box located near the electrical meter base.

b. At least 5 feet of slack shall be left for each conductor at each luminaire arm, and at least 5 feet of slack at each pull box with at least 10 feet of slack at the pull box adjacent to the meter base.

c. Conductors shall be permanently identified as to luminaire arm location. Identification shall be placed on each conductor, or each group of conductors, in each pull box. Identification shall be by direct labeling, tags or bands fastened to the conductors in such a manner that they will not move along the conductors. Labeling shall be by mechanical methods.

750.04 – Measurement and Payment

1. **Signal Cable**

Measurement: The contract unit price shall be measured in Linear Feet (LF), from connection point to connection point, for the size, type and number of conductors, specified on the plans.

Basis of Payment: The basis of the contract unit price shall vary according to the specified work tasks.

Furnish - The unit price furnished shall include the specified wire cost that conforms to Section 750 of these specifications, and all shipping costs.

Install - The unit price installed shall include all labor, tools, equipment, and incidentals necessary for a complete and accepted installation.

Furnish and Install - The unit price for furnishing and installing the specified wire shall include wire, conforming to Section 750 of these specifications, all hardware required for installation, labor, tools, equipment and incidentals necessary for a complete and accepted installation.

2. **Communications / Interconnect Cable (copper)**

Measurement: The contract unit price shall be measured in Linear Feet (LF), from connection point to connection point, for the size, and number of conductors, specified on the plans.

Basis of Payment: The basis of the contract unit price shall vary according to the specified work tasks.

Furnish - The unit price furnished shall include the specified wire cost that conforms to Section 750 of these specifications, and all shipping costs.

Install - The unit price installed shall include all labor, tools, equipment VDOT Standard CTE-l or CTE-3 (if required) and incidentals necessary for a complete and accepted installation.

Furnish and Install - The unit price for furnishing and installing the specified wire shall include wire, conforming to Section 750 of these specifications, all hardware required for installation, labor, tools, equipment VDOT Standard CTE-l or CTE-3 (if required) and incidentals necessary for a complete and accepted installation.

3. **Service Cable Assembly**

Measurement: The contract unit price shall be measured in Linear Feet (LF), from connection point to connection point, for the size, type and number of conductors, specified on the plans.

Basis of Payment: The basis of the contract unit price shall vary according to the specified work tasks.

Furnish - The unit price furnished shall include the specified wire cost that conforms to Section 750 of these specifications, and all shipping costs.

Install - The unit price installed shall include all labor, tools, equipment and incidentals necessary for a complete and accepted installation.

Furnish and Install - The unit price for furnishing and installing the specified wire shall include wire, conforming to Section 750 of these specifications, all hardware required for installation, labor, tools, equipment and incidentals necessary for a complete and accepted installation.

4. **Lead-In Cable**

Measurement - The contract unit price shall be measured in linear feet (LF), from connection point to connection point, for the size, and number of conductors, specified on the plans.

Basis of Payment - The basis of the contract unit price shall vary according to the specified work tasks.

Furnish - The unit price furnished shall include the specified wire cost that conforms to Section 750 of these specifications, and all shipping costs.

Install - The unit price installed shall include all labor, tools, equipment and incidentals necessary for a complete and accepted installation.

Furnish and Install - The unit price for furnishing and installing the specified wire shall include wire, conforming to Section 750 of these

specifications, all hardware required for installation, labor, tools, equipment and incidentals necessary for a complete and accepted installation.

5. **Loop Wire**

Measurement: The contract unit price shall be measured in Each, (EA) for the size, and number of conductors, specified on the plans. **No linear footage measurement will be made for loop wire when typical inductive loop standard TD-1A, B, or C is proposed in the contract documents. The cost for the loop wire shall be included in the inductive loop standard. Inductive loop standard TD-1A, B or C shall be measured in units of Each (EA) per size and pavement type.**

Basis of Payment: The basis of the contract unit price shall vary according to the specified work tasks.

Furnish – The unit price furnished shall include the specified wire cost that conforms to Section 750 of these specifications, and all shipping costs.

Install – The unit price installed shall include all labor, tools, splice kit, equipment, saw cut slots and corner drill holes, loop sealant and incidentals necessary for a complete and accepted installation. Costs of saw cut and wire lengths required for home-runs from the junction box and edge of roadway to the loop itself shall be considered incidental work for the complete installation of the loop and Section 750 of these specifications.

Furnish and Install – The unit price for furnishing and installing the specified wire shall include wire, conforming to Section 750 of these specifications, all hardware required for installation, labor, tools, splice kit, equipment, saw cut slots and corner drill holes, loop sealant and incidentals necessary for a complete and accepted installation. Costs of saw cut and wire lengths required for home-runs from the junction box and edge of roadway to the loop itself shall be considered incidental work for the complete installation of the loop and Section 750 of these specifications.

6. **Street Light**

Measurement - The contract unit price shall be measured in Linear Feet (LF), from connection point to connection point, for the size, and number of conductors, specified on the plans.

Basis of Payment - The basis of the contract unit price shall vary according to the specified work tasks.

Furnish - The unit price furnished shall include the specified wire cost that conforms to Section 750 of these specifications, and all shipping costs.

Install - The unit price installed shall include all labor, tools, equipment and incidentals necessary for a complete and accepted installation.

Furnish and Install - The unit price for furnishing and installing the specified wire shall include wire, conforming to Section 750 of these specifications, all hardware required for installation, labor, tools, equipment and incidentals necessary for a complete and accepted installation.

++ END OF SECTION ++

SECTION 755 – SPAN, TETHER, LASHING WIRE, AND MESSENGER WIRE & SPAN WIRE ASSEMBLY

755.01 – Description

The work under this section shall consist of furnishing and installing of span wire, tether wire, lashing wire, and span wire assembly used for traffic signal installation as shown on the Contract Drawings or as ordered by the Engineer and in conformance with these specifications.

755.02 – Materials

1. **Span Wire** - shall meet the following requirements for the specified application.

   The span wire shall be of ½ inch nominal diameter, 7-strand, galvanized conforming to ASTM A475, (10 M) Utilities grade or better.

2. **Tether Wire -** shall meet the following requirements for the specified application.

   Tether wire shall conform to the requirements of ASTM A475, Common Grade, Class A, 7-strand, galvanized. The breaking strength of tether cable shall be not more than 3,000 pounds.

3. **Lashing Wire** - shall meet the following requirements for the specified application.

   The lashing ties shall be heavy duty black weather-resistant and UV resistant Type PLT cable ties.

   <u>Reel Size</u> –

   l) The reel size for span and tether wire shall be in l000 foot reels.
   2) The coil for the lashing wire shall be in 375 foot coils.

4. **Messenger Wire**

   The Messenger wire shall be of at least 1/4 inch nominal diameter, 7-strand, galvanized conforming to ASTM A475, high strength grade.

5. **Span Wire Assembly**

   The components of the span wire assembly shall comply with the details on the plans and the following specifications.

Span Wire Hanger - The span wire hanger shall be cast ductile iron or equivalent, free of voids, pits, dents, molding sand and excessive foundry grinding marks.

Disconnect Hanger - The disconnect hanger shall comply with the following;

The disconnecting housing shall be made of cast aluminum alloy with a removable cover. A standard balance adjuster fitting at the top shall be supplied and made of the same material. The housing shall contain a tri-stud head type adapter to connect to the signals.

Terminal Block - Inside the housing shall contain a 12-circuit or 18-circuit field wires marathon terminal block wired to a multi-circuit female type connector. A male mating connector with an attached wiring harness shall be included for making connections to the signal head. The harness shall have a minimum length of 48 inches.

Color - The disconnect hanger and balance adjuster shall be Black color.

Cover Plate - The cover plate shall fasten with a single thumb screw and must swing-out of the way for access to the hanger's interior.

Tri-Stud Washer - Kit-A Tri-stud washer kit shall be provided and it shall consist of neoprene weather seal gasket, tri-stud locking plate, lock washers and aluminum nuts.

755.03 – Packing and Shipping

The package and shipping requirements shall be in accordance with section ll0 of these specifications.

755.04 - MEASUREMENT AND PAYMENT

1. **Span Wire, Tether Wire, Lashing Wire, and Messenger Wire**

Method of Measurement - The wire and accessories shall be measured in units of linear feet, from connection point to connection point, for the size, and type specified herein or on the plans.

Basis of Payment - The basis of the unit contract price shall vary according to the specified work tasks.

Furnish - The unit price to furnish the components shall consist of the specified component that conforms to Section 755 of this specification, all

hardware, shipping costs and incidentals necessary for a complete installation by City forces or others.

Install - The unit price installed shall include all labor, tools, equipment and incidentals necessary for a complete and accepted installation.

Furnish and Install - The unit price for furnishing and installing the specified wire shall include wire, conforming to Section 755 of these specifications, all hardware required for installation, labor, tools, equipment and incidentals necessary for a complete and accepted installation.

2. **Span Wire Assembly**

Method of Measurement - Span wire assembly will be measured in units of each per assembly.

Basis of Payment - The contract unit price per assembly shall be based on the following work tasks.

Furnish - The unit price to furnish a span wire assembly shall consist of a span wire assembly that conforms to Section 755 of this specification, all hardware, shipping costs and incidentals necessary for a complete installation by City forces or others.

Install - The unit price for an installed span wire assembly shall consist of all tools, equipment, hardware, labor and incidentals necessary to build and install a complete and accepted installation, in accordance with Section 755 of this specification.

Furnish and Install - The unit price to furnish and install a standard span wire assembly shall consist of a span wire assembly that conforms to Section 755 of this specification, hardware, tools, equipment, labor and incidentals necessary for a complete and accepted installation in accordance with these specifications.

End of Section

SECTION 760 – LOOP SEALANT

760.01 – Description

This work under this section describes the minimum requirements for loop detector sealants.

760.02 - Material

The sealant shall conform to the following general specifications and the below specific requirements. The sealant shall have a high ambient hard asphaltic base compound having a high softening point and high pouring temperature. The compound shall remain plastic at the highest cable operating temperature.

1. The sealer shall be of one-part formula, shall not require mixing.

2. It shall effectively resist oil, gasoline, anti-freeze solutions, brake fluid & road salt.

3. The sealant shall be **OZ/GEDNEY DOZSeal 230** or approved equal.

760.03 – Packaging and Handling

The sealant shall be packaged to in five gallon containers.

760.04 – Installation

Installation of sealant shall follow manufacture suggested installation procedures and in accordance with these specifications.

760.05 - Measurement and Payment

Method of Measurement: No separate measurement will be made for loop sealant. Price of the sealant shall be included in the price of the traffic loop as specified on the plans.

End of Section

SECTION 765 – INDUCTIVE LOOP DETECTORS

765.01 – Description

This work under this section describes the minimum requirements for inductor loop detectors. Each loop detector shall conform to Reno Model C Loop Detector performance specifications and the requirements listed below.

765.02 - Material

The following specification describes the minimum acceptable requirements for a two channel INDUCTIVE LOOP DETECTOR.

The detector shall meet or exceed NEMA TS -1 and TS-2 specifications. In addition to meeting or exceeding NEMA TS-1 and TS- 2 specifications, the detector shall also meet the specific features defined in this detailed specification.

The digital loop detector shall be designed using a front panel that includes all programming switches and an LCD display. The detector must be capable of being completely programmed from the front panel without the need to remove the detector from the card rack. All parameter settings shall be set and viewed via the menu on the LCD display. In addition all diagnostic data shall also be viewed from the front panel LCD display. LEDs shall provide the light source for illuminating the LCD display.

The following detailed items describe the specific features of the detector:

Loop Frequency:
The loop detector shall be capable of displaying the actual loop operating frequency for each setting. There shall be eight (8) selectable loop frequency settings per channel (normally in the range of 20 Kilohertz to 100 kilohertz). The actual loop operating frequency shall be a function of the loop/lead-in network and the components of the loop oscillator circuit.

Sensitivity:
The detector shall have a unique bar graph displayed on the LCD, which makes it easy to quickly set the sensitivity at the ideal level for any loop/lead - in network situation. There shall be nine (9) selectable sensitivity levels per channel, plus Continuous - Call and Channel- Off. The highest sensitivity setting, level “9”, shall respond to an inductance change of -0.0025% -ΔL/L. Each decreasing level of sensitivity shall decrease the sensitivity by a factor of two. (e.g. Sensitivity “8” shall be -0.005% -ΔL/L, Sensitivity “7” shall be -0.01% -ΔL/L, etc.)

Continuous - Call:
When set to the Continuous - Call state, the channel output is continuously in the Call state regardless of the presence or absence of vehicles over the loop. The loop oscillator shall be disabled when in the "Continuous - Call State". This state shall be indicated by "CALL" flashing on the LCD display. This feature shall be selected from the Sensitivity menu in Program Mode.

Channel - Off:
When set to the "Channel - Off state", the channel output shall be continuously in the No- Call state regardless of the presence or absence of vehicles over the loop. The loop oscillator shall be disabled when in the "Channel - Off State". This state shall be indicated by "OFF" flashing on the LCD display. This feature shall be selected from the Sensitivity menu in Program Mode.

Call Delay:
Each channel's Call Delay shall be adjustable from 0 to 255 seconds in 1 – second Steps. Call Delay time shall start counting down when a vehicle enters the loop detection zone. The remaining Call Delay time shall be continuously displayed on the LCD display.
Whenever a Phase Green Input (call delay override) signal (pins 1 or 2) is active (low state), the Call Delay function for that channel shall be aborted and the Call Delay time forced to zero.

Call Extension:
Each channel's Call Extension shall be adjustable from 0 to 25.5 seconds in 0.1-second steps. Extension time shall start counting down when the last vehicle clears the loop detection zone. The remaining Extension time shall be continuously displayed on the LCD display. Any vehicle entering the loop detection zone during the Extension time period shall cause the channel to return to the Detect state, and later, when the last vehicle clears the loop detection zone, the full Extension time shall start counting down again.

Presence/Pulse:
One of two mutually exclusive modes of operation for each channel shall be selected in the Program Mode:

Presence Mode:
The loop detector shall provide a Call hold time of at least 4 minutes (regardless of vehicle size) and typically 1 to 3 hours for an automobile or truck.

Pulse Mode:
The loop detector shall generate an output Pulse of 125±10 milliseconds duration for each vehicle entering the loop detection zone. Each detected vehicle shall be tuned out if it remains in the loop detection zone longer than 2 seconds. After each vehicle leaves the loop detection zone, the channel shall resume full sensitivity within 0.5 seconds.

Max Presence Timer:
Each channel's Max Presence timer shall be adjustable from 1 to 999 seconds in 1-second steps, plus "OFF". If this function is enabled (on), the Max Presence timer shall begin counting down when a Call is initiated and the remaining time shall be continuously displayed on the LCD display. If the loop becomes vacant before the Max Presence timer reaches zero, the Call shall be dropped and no automatic reset shall occur. If the End-Of-Green (EOG) function is not enabled (off) and the Call is still present when the Max Presence timer reaches zero, the channel shall be automatically reset. If the EOG function is enabled (on) and the Call is still present when the Max Presence timer reaches zero, the channel shall enter a "Wait" state. The Wait state continues until either the loop becomes vacant or the Phase Green Input signal for the channel (pin 1 or 2) transitions from green to not green with the Call still present. If the loop becomes vacant first, the Call shall be dropped and no automatic reset shall occur. If the Phase Green Input for the channel transitions from green to not green while the channel is in the Wait state, the channel shall be automatically reset.

End-Of-Green (EOG):
The EOG function shall be used to synchronize resetting of a channel with the termination of the associated phase green. The EOG function shall only be available when the Max Presence function is set between 1 and 999 seconds. It shall not be available when the Max Presence function is OFF. When the EOG function is enabled (on), the channel shall automatically be reset at the time the phase green input signal (pin 1 or 2) transitions from the green state to the not green state, if the Max Presence Time has counted down to zero and is resting in the wait state.

Loop Inductance Display:
When this feature is enabled (on), the LCD shall display the total loop inductance (actual loop inductance plus lead -in inductance) in Microhenries with an accuracy of ±3% for inductance values in the range of 20 to 2500 Microhenries. *Enabling this feature shall activate it for both channels. This option shall be automatically disabled 15 minutes after activation, or on loss of power.*

Loop Inductance -ΔL/L Display:
When this feature is enabled (on), the LCD display shall display the percentage of inductance change (**-Δ**L/L value) during the Call state. To facilitate the viewing of the maximum amount of change in the **-Δ**L/L value while traffic is in motion over the detection zone, the display shall hold the peak **-Δ**L/L value for a period of 2 seconds.
Enabling this feature shall activate it for both channels. This feature shall be automatically disabled 15 minutes after activation, or on loss of power.

Call Extension Control:
When this feature is enabled (on), the channel shall extend calls for the programmed extension time only when the Phase Green Input signal (pin 1 or 2) is in the phase green state for the channel. When this feature is off, the channel shall extend ALL calls for the programmed extension time.
Each channel shall be enabled independently.

Noise Filter:
When this feature is enabled (on), the channel shall increase the filtering to minimize the effects of particular types of noise, which may result in detector "lock up".
Each channel shall be enabled independently.

Phase Green Loop Compensation:
When this feature is enabled (on), normal loop compensation shall be used until the Phase Green Input signal (pin 1 or 2) is in the phase green state. Once the Phase Green Input signal is in the phase green state, the detector shall desensitize the loop. Maximum loop desensitization shall be +0.05% (**-Δ**L/L) for each transition of the phase green signal from transitioning from "not green" to "green". When this feature is not enabled (off), normal loop compensation shall be used.
Each channel shall be enabled independently.

Counter Display:
When this feature is enabled (on) for a channel, the normal operating display shall be replaced with the accumulated "CALL" count. The unit shall be capable of accumulating 65,535 counts before rolling over to 0. The display shall show the hundreds, tens, and ones digits until the accumulated count exceeds 999. At this point the display shall toggle between two indications, the first indication showing the ten thousands and thousands digits during a short time interval, and the remaining three digits for hundreds, tens, and ones during a second time interval.

Counter Reset:
This feature shall be used to reset the accumulated count for the selected channel. When this feature is changed from the "OFF" state to the "ON"

state, the accumulated count for the selected channel shall be reset to zero. This feature will always be in the OFF state when first viewed.

Third Car Passage:
When this feature is enabled (on), the output of channels 1 and 2 shall be logically ANDed together. This means that while the loops f or both channels are occupied, a call shall appear on both channels. When only one channel is occupied, or neither channel is occupied, a call shall not appear on either channel. The first channel with detection shall provide a "pending" state while waiting for detection in the other channel. While in the pending state, the LCD display shall show "Pnd" on the display.

Directional Logic:
When this feature is enabled (on) directional logic shall be enabled. Directional logic shall start with detection on one channel. This channel shall go into the "pending" state, displayed as "Pnd" on the LCD display, and the channel shall not output a CALL. When both channels have detection, the last channel to have detection shall output a CALL until the detection for the last channel ends, even if the detection ends for the first channel. None of the timing functions of the first channel with detection shall time (Delay, Extension, Max Presence, and Detector Disconnect) and the first channel shall always operate in the Presence Mode regardless of programming for the channel. The second channel with detection shall time all timing functions as programmed.

Audible Detect Signal:
When this feature is enabled (on), an audible tone shall be activated whenever the detection zone for the selected channel is occupied. The audible tone shall indicate actual occupancy of the loop detection zone. Timing and disconnect functions shall have no effect on the audible signal. This feature shall allow a technician to watch the detection zone on the street and confirm correct detector operation without having to look at the detector display.
This feature shall be automatically disabled 15 minutes after activation, or on loss of power.

Detector Disconnect:
The Detector Disconnect feature shall require that the Phase Green Inputs for each channel be connected to the proper controller phase. When the Phase Green Input is not active (high), the detector shall operate normally. When the Phase Green Input is active (low), the extension timer shall start counting down beginning with the end of detection. If this timer reaches zero before the next detection occurs, this channel shall no longer output a call; until the phase green input changes to the not active state. Two different types of disconnect shall be available:

TYPE 1:
Extension timing shall occur and the extension timer shall also serve as the disconnect timer during phase green. This shall cause the Call output to remain in the CALL state until disconnect occurs. This shall allow the user to use gap times appropriate for the advance loops, without considering the effects from the stop bar loops.

TYPE 2:
Extension timing shall be disabled and the extension timer shall be used as the disconnect timer. This shall cause the Call output to follow the occupancy of the loop detection zone until disconnect occurs.

SPECIFICATIONS (PHYSICAL):

Weight:
6 oz. (170 gm.).

Size:
4.500 inches (11.43 cm.) high x 1.12 inches (2.84 cm.) wide x 6.875 inches (17.46 cm.) long including connector (not including front handle).

Operating Temperature:
-40°F to +180°F (-40°C to +82°C)

Circuit Board:
Printed circuit boards shall be 0.062 inch FR4 material with 2 oz. copper on both sides and plated through holes. The circuit board and components shall be conformal coated with a polyurethane material.

Connector:
2 x 22 contact edge card connector with 0.156 -inch (0.396 cm.) contact centers. Key slots shall be located between B&C, E&F, and M&N.

Loop Feeder Length:
Shall work with up to 5000 feet (1500m.) with proper feeder cable and appropriate loops.

SPECIFICATIONS (ELECTRICAL):

Power:
10.8 to 30 VDC, 120 MA. max.

Loop Inductance Range:
20 to 2500 μH (Microhenries) with a Q factor of 5 or greater.

Loop Inputs: Transformer isolated. The minim um capacitance added by the detector shall be 0.068μF (microfarads).

Lightning Protection:
The detector shall tolerate, without damage, a 10μF (microfarad) capacitor charged to 2,000 volts being discharged directly into the loop input terminals, or a 10μF (microfarad) capacitor charged to 2,000 volts being discharged between either loop terminal and earth ground.

Reset:
Shall meet and/or exceed NEMA TS 1 and TS 2 detector specifications. Application of a 30- millisecond low state (0 to 8 VDC) to pin C shall reset both channels. Each detector channel shall be capable of being independently reset by pressing the appropriate front panel switch(s) for three seconds. Whenever the sensitivity or loop frequency of either channel is changed that channel shall be immediately reset.

Phase Green Inputs:
(Also known as Call Delay Overrides). Shall meet and/or exceed all NEMA TS 1 and TS 2 requirements. Application of a Low state voltage (0 to 8 VDC) to pin 1 (Ch. 1) and/or pin 2 (Ch. 2) shall cause the delay timer for the channel to abort the delay timing function and also provide control for Phase Green Loop Compensation, Max Presence Timing (End-of- Green), Extension timing, and Detector Disconnect; if the features are programmed. The (332/170 version) shall have an RJ- 11 connector mounted on the circuit board for connecting the phase green inputs (pin 1 – Ch. 2 and pin 2 – Ch.1).

Fail-Safe Outputs:
Per NEMA TS 2 - conducting state indicates detection output. Each detector channel output shall default to a CALL state for any loop failure condition or loss of power. The maximum voltage level for the CALL state shall be 1.30 VDC at 50 MA. current.

Channel Status Outputs:
Per NEMA TS 2 - Each channel shall have an output, which communicates the status states of the channel as follows:

Normal operation: - - - - - - - - - - - - - - Continuous **Low** or **On** State
Channel failure : - - - - - - - - - - - - - - - - Continuous **High** or **Off** State
Open loop: - - - - - - - - - - - - - - - - - - - 50 ms. **On** time, 50 ms. **Off** time
Shorted loop: - - - - - - - - - - - - - - - - - 50 ms. **On** time, 100 ms. **Off** time
Excessive inductance change (>±25%): - 50 ms. **On** time, 150 ms. **Off** time

Solid State Output Ratings:
Optically coupled field effect transistors. Drain to Source: 30 VDC maximum, 50 MA. maximum current. The output transistor shall be protected with a 33 - volt zener diode connected between the Drain and Source.

SPECIFICATIONS (OPERATIONAL):

Display:
The display shall be an LCD with backlighting provided by LEDs. The backlighting shall illuminate whenever any front panel switch is actuated. The backlighting shall extinguish 15 minutes after the last actuation of any front panel switch.

Detect Indicators:
Each channel shall have a super high intensity red light emitting diode (LED) to indicate a CALL output, Delay Timing, Extension Timing, Pending state, or failed loop.

Response Time:
Shall meet or exceed NEMA TS 1 and TS 2 response time specifications.

Self-Tuning:
The detector shall automatically tune and be fully operational within 2 seconds after application of power or after being reset. Full sensitivity and hold time shall be reached within 30 seconds of operation.

Environmental Tracking:
The detector shall be fully self-compensating for environmental changes and loop drift over the full temperature range and the entire loop inductance range.

Grounded Loop Operation:
The loop isolation transformer shall allow operation with poor quality loops (which may include one short to ground at a single point).

Loop (Fail) Monitor:
If the total inductance of the channel's loop input network goes out of the range specified for the detector, or rapidly changes by more than ±25%, the channel shall immediately enter the Fail-Safe mode and display "LOOP FAIL" on the LCD display. The type of loop failure shall also be displayed as "L lo" (for -25% change or shorted loop conditions) or "L hi" (for +25% change or open loop conditions). This shall continue as long as the loop fault exists. The Fail-Safe mode shall generate a continuous call in both Presence Mode and Pulse Mode. At the time of a loop failure, the channel's LED shall begin repeating a burst of three flashes each one

second. The LED shall continue these bursts until the channel is manually reset or power is removed. If the loop "self heals", the LOOP FAIL message on the LCD display shall extinguish and the channel shall resume normal operation; except the LED shall continue the bursts thus providing an alert that a prior Loop Fail condition occurred. Each separate loop failure for the channel shall be counted and accumulated in the Loop Fail Memory. The total number of loop failures written into the Loop Fail Memory (since the last power interruption or manual reset) shall be viewed by stepping through the channel's functions in Program Mode to the "LOOP FAIL" message.

Full Restore To Factory Defaults:
Actuating all front panel switches simultaneously and continuously for five (5) seconds shall reset the detector and restore all the factory default settings. The countdown of the 5-second period shall be displayed on the LCD display. Releasing any of the switches before the countdown ends shall abort the Full Restore operation.

Display Test:
Actuating any two of the front panel switches simultaneously shall activate all symbols on the LCD display.

a. The loops shall be sequentially scanned to eliminate cross-talk.

765.03 – Installation

Installation shall follow manufacturer-suggested installation procedures and in accordance with these specifications.

765.04 - Measurement and Payment

Inductive loop detectors shall not be measured and paid for separately; they shall be considered incidental to the Traffic Controller Assembly.

End of Section

SECTION 770 – FOUNDATIONS

770.01 – Description

This work under this section describes the minimum requirements for installation of foundations.

Foundations for controller cabinets, traffic signal poles, CCTV poles, pedestal poles, and lighting standards shall consist of furnishing, designing in accordance with VDOT Section 105, and installing, and shall conform to the size, type, location, and details as shown in the contract plans, or as ordered by the Engineer, and conform with these specifications.

770.02 - Material

The foundations shall conform to the following general specifications and specific requirements:

a. Concrete shall conform to the requirements with Sections 217 and 404 of the Virginia Department of Transportation (VDOT) Road and Bridge Specifications, 2007, for Class "A-3", general use, air entrained (3,000 P.S.I) Hydraulic Cement Concrete.

b. Steel reinforcements shall conform to Section 223 of the applicable requirements for "Steel Reinforcement" given in the VDOT Road and Bridge Specifications, 2007, and shall be of type and size as indicated on contract plans.

c. Ground rod shall be a 5/8" diameter by 24' copper-clad steel rod conforming to UL467 (ANSI C33.8) or as directed by the Engineer.

d. Anchor bolts shall be furnished by the pole manufacturer in accordance with plans and specifications. For mast arm foundations, the Contractor shall be responsible to ensure that the correct bolts are provided of the length and diameter as indicated on the details for the mast arm foundations, and coordinate their installation with the Project Engineer. Mast arm pole bolts shall be furnished with an extra square nut for plumbing.

e. Street lighting foundation shall be VDOT Standard LF-1.

f. Signal pole and mast arm assembly foundation shall be VDOT Standard PF-1.

g. Pedestal pole foundation shall be VDOT Standard PF-2.

h. Traffic controller cabinet foundation shall be VDOT Standard CF-3.

770.03 – Installation

Installation of foundations shall follow specification installation procedures and in accordance with these specifications.

a. Concrete foundations shall rest on firm ground.

b. Foundations for post, signal standard, pedestal, or lighting standard, not located on structures, shall be placed "in the solid" and monolithic, except for the top 4" which shall be placed after the post, signal standard, pedestal, or lighting standard is in proper position.

c. Welding shall not be performed on any portion of galvanizing part of the high strength anchor bolts, anchor bars, or studs.

d. Each foundation shall be permanently marked to indicate all sides from which conduits pass. The mark shall be made with a trowel when finishing the concrete and shall be 1/4" deep and 4" to 6" long.

e. When foundations extend 4" above the finished grade, all corners shall be chamfered 3/4".

f. When a foundation is to be abandoned, the top of the foundation, anchor bolts, and conduits shall be removed to a depth of not less than 3 feet below the surface of sidewalk or unimproved ground. The resulting hole shall be back-filled and landscaped with material equivalent to the surrounding material.

g. Top of foundations for posts, signal standards, pedestals, and lighting standards, except where directed by Engineer, shall be finished flush with natural ground or sidewalk grade.

h. Forms if used shall be true to line and grade. Forms shall be rigid and securely braced in place. Conduit ends and anchor bolts shall be placed in proper position and to proper height, and shall be held in place by means of a template until the concrete sets.

i. All forms shall be treated with oil or an approved form-coating material, or thoroughly moistened with water immediately before placing the concrete.

j. Posts, poles, standards, and pedestals shall not be erected until the foundation has set for 14 days, and shall be plumbed or raked, as directed by Engineer.

k. When shown on the plans, the Contractor shall modify the existing controller or pole foundations to allow the new conduit sweeps to enter the foundation in accordance with the following:

1. Remove concrete by cutting, chiseling or any other approved method as required to install new conduit sweeps without damage to existing conduit(s). The Contractor shall repair any damage incurred at no additional cost to the City.

2. After removing concrete, the area shall be washed with pressurized water and thoroughly dried with compressed air.

3. Position new conduit sweeps, and apply an approved concrete bonding compound on the exposed concrete surfaces as recommended by the manufacturer.

4. Forms shall be positioned so that the profile of the existing foundation above grade will be matched.

If there are adequate existing conduit sweeps which can be used to install the new conductors, it will not be necessary to modify the foundation. It will be the Contractor's responsibility to ascertain that he may use the existing sweeps.

770.04 - Measurement and Payment

Method of Measurement: Street Light Foundations (VDOT Std LF-1), Pedestal Pole Foundations (VDOT Std PF-2), CCTV Pole Foundations, and Traffic Controller Cabinet Foundations (VDOT Std CF-3) will be measured in units of Each (EA). Signal Pole Foundations (VDOT Std PF-1) will be measured in units of Cubic Yards (CY).

Basis of Payment - The unit price shall be based on the following work tasks specified.

Furnish and Install - The unit price for a furnished and installed standard specified foundation shall include design of foundation, materials (concrete, reinforcing steel, ground rod, conduits when required, excavation, backfill with suitable material, compaction and disposal of suitable material), labor, equipment and incidentals for a complete installation in accordance Section 770 of these Specifications. Foundation structural design computations shall be submitted to Owner.

End of Section

SECTION 780 – AUDIBLE ADA PEDESTRIAN PUSHBUTTON ASSEMBLY

780.01 - Description

The work under this section shall consist of furnishing, installing and configuring American with Disabilities Act (ADA) approved audible pedestrian pushbutton station with audio capability, and its control unit, at each location as indicated in the contract documentation or where directed by the Engineer. The main purpose of the pedestrian push button station described herein is to assist the visually impaired in intersection crossing.

780.02 – Materials

Each Installed station shall have the following:

A. Pedestrian Pushbutton Station:

a) The station housing shall be no larger than 15.25 inch high, 5.50 inch wide and 2.50 inch in depth.
b) The station shall include a weatherproof speaker to emit the audible sounds. This speaker shall be recessed and located in back of the unit.
c) The station shall be constructed of cast aluminium, have a powder coated paint finish and be yellow, green or black as shown in the design plans.
d) Shall be vandal resistant with no moving parts.
e) The pedestrian push button shall be ADA compliant with 2 inch diameter that is pressure activated and includes a raised arrow. The push button material shall be constructed of cast aluminium, have a powder coated paint finish and be yellow, green or black as shown in the design plans. The arrow button shall be anodized 6061 aluminum, nickel plated black powder coated on area surrounding arrow.
f) The Station shall have an Advisory sign that shall be a 9” X l2” MUTCD Rl0-3b or 9” X 15” MUTCD R10-3e sign message, "Pushbutton for Walk Signal" with the appropriate directional arrow when required as directed.

B. Control Unit:

a) Each pedestrian push button station shall be controlled by a central control unit. The control unit shall be designed so that it fits into the intersection traffic signal control cabinet, unless otherwise indicated by the contract specifications or as directed by the Engineer.
b) The input side of the control unit will be connected in parallel to the walk and don’t walk AC signals that control the hand/ person pedestrian LED’s installed in the pedestrian signal head. The output side of the control unit will connect and control the push button station. Mounting hardware, to facilitate mounting of the control unit inside of the pedestrian signal head, shall also be provided.

c) If an external device is needed to set up, configure, and program the pedestrian push button station, one device, unless this requirement is waived by the contract documents or by the Engineer, shall be supplied for each intersection that a pedestrian push button station is installed.

780.03 – Operational Features

The stations push button shall be capable of providing the following:

a) An LED indicator that illuminates when the pushbutton is activated and remains illuminated until the start of the walk cycle.
b) A vibrating push button during the pedestrian walk cycle.
c) Push-button activation elements shall be entirely insulated from the housing and operating buttons.
d) Shall be capable of withstanding an impact from either a wood/metal rod and/or a hammer.
e) Shall provide at least 4 locating tones, custom sounds, or verbal countdown during Pedestrian walk cycle. The audio sounds emitted during the pedestrian walk cycle shall be audible chirp (for east/west intersection crossing), and cuckoo (for north/south intersection crossing).
f) Central Control Unit shall be able to allow up to 16 Push Button Stations (4 maximum per channel).
g) A minimum of one non-custom (pre-programmed and field configurable) voice informational message stating direction of intersection crossing.
h) Custom audio messages and configuration settings can be easily changed via USB port.

Audio and Environmental features:

a) The push button station and push button control unit shall operate between the temperature range of -30° F to 165° F.
b) Locate sounds, clearance sounds and informational messages shall be capable of producing 60db of audio output.
c) The minimum ambient sound shall be at least 37 dBA.
d) The Audible Chirp sounds shall be from 2700 Hz to 1700 Hz, 0.2 second duration, 1 second interval. The Audible Cuckoo sound shall be from 1250 Hz to 1000 Hz, 0.6 second duration, 1.8 second interval. The Audible Station locating tone shall be 880 Hz plus harmonic, 0.1 sec duration, 1 second interval.
e) All sounds automatically adjust to ambient over 60 dB range.
f) Independent ambient adjustment setting for the locate tone which allows fine adjustments for low ambient conditions.

780.04 - Installation

A pushbutton advisory sign (Rl0-3b or R10-3e) shall be attached to the pushbutton assembly which shall be attached securely to the post or pole as indicated on the contract drawings. The height of the button shall not be less than 3 ½ feet and no more than 4 feet above the sidewalk or curb. The pushbutton and sign shall be installed on the pole or post on the sidewalk side, parallel to the crosswalk for which the pushbutton controls, and shall be approved prior to drilling the required holes. Pushbutton cables from the field shall be terminated to the Latching Pushbutton Control Unit installed and fully hard-wired in the location specified by DOT within the traffic control cabinet. Installation shall be in accordance with VDOT standard PA-l, 2 or 3 and as indicated on plans and details.

780.05 – Measurement and Payment

Method of Measurement – Audible ADA Pedestrian Pushbutton assembly will be measured in units of Each (EA) per assembly. The price shall include sign, ADA complaint push button, pushbutton stations, control units and mounting hardware. The contract unit price per assembly shall be based on the following work tasks.

Basis of Payment - The basis of the unit contract price shall vary according to the specified work tasks:

A. **Furnish**: The unit price to furnish an Audible ADA Pedestrian Pushbutton Assembly shall consist of ADA compliant pushbutton, pushbutton stations, and control units, mounting hardware, signs and shipping costs and incidentals necessary for a complete installation.
B. **Install**: The unit price to install an Audible ADA Pedestrian Pushbutton Assembly shall consist of ADA compliant pushbutton, pushbutton stations, and control units, mounting hardware, signs and shipping costs and incidentals necessary for a complete installation.
C. **Furnish and Install**: The unit price to furnish and install an Audible ADA Pedestrian Pushbutton Assembly shall consist of ADA compliant pushbutton, pushbutton stations, and control units, mounting hardware, signs and shipping costs and incidentals necessary for a complete installation.

End of Section

SECTION 804 – FIBER OPTIC SPLICE CABINETS

804.01 - Description

This work shall consist of furnishing and installing new cabinets to house fiber optic cable splices in accordance with these specifications, as shown on the project plans, and/or as directed by the Engineer.

804.02 - Equipment

A. Fiber Splice Cabinets, Base Mounted

The Contractor shall furnish and install 336S cabinets to serve as fiber optic splice cabinet at the locations shown on the Plans. Each such cabinet shall be fabricated from aluminum, base-mounted, and contain splice facilities to accommodate the incoming and outgoing fiber optic cables.

The fiber splice cabinets shall conform to specification Section 703.02 for cabinets except for the cabinets to be used as fiber splice cabinets shall not contain the following items:

- Diagnostic Testing Shorting Jack
- Remote Detector Input
- Inductive Loop Detector Input
- Signal Load Switch Outputs
- Red Monitor Harness
- Police Panel
- Input File
- Detector Racks
- Signal Conflict Monitor
- Fiber Optic Modems
- Connector CI Wiring Harness
- C5 Connector
- Base Adaptor

The foundation for base-mounted splice cabinets shall conform to the foundation requirements of the Typical Drawings for base-mounted cabinet installation as shown in the plans.

The splice facilities shall consist of <u>two (2) fiber splice trays</u> and <u>one tray housing</u>. Additional trays shall be provided as necessary to accommodate the numb of fusion splices required by the project, and as shown in the fiber splice details. The housing shall be as required above except that connector panels and jumpers shall not be required.

B. Fiber Splice Enclosure, Rack Mounted

The Contractor shall furnish and install a wall-mountable fiber optic splice cabinet for the termination and connectorization of the fiber optic cable at the locations shown on the project plans. The wall mounted splice cabinet shall be fabricated of aluminum and meet Electronic Industries Association (EIA)/Telecommunication Industries (TIA) Standard 568.

The splice cabinet shall have connector panels and interconnection sleeves necessary to connect the equipment to the cabinet with an adequate number of spare connectors. The splice cabinet shall have FCPC interconnection sleeves.

Each termination cabinet shall have two hinged doors, one of which shall allow access to all components of the cabinet with the exception of the splice trays. The other door, which shall be equipped with a lock and key, shall fold down and open the entire splice cabinet for installation and maintenance.

Cabinet-Mounted Interconnect Center (C-MIC)
Technical Information & Standards

Enclosures B. & C. Dimensions:

C-MIC-012 strand cable:	**C-MIC-024 strand cable:**
Height: 1.75” (4.4cm)	Height: 3.5” (8.9cm)
Width: 17” (43 cm)	Width: 17” (43 cm)
Depth: 11” (28 cm)	Depth: 11” (28 cm)
Weight: 4.25 lb (1.9 kg)	Weight: 5.6 lb (2.3 kg)

C. Fiber Optic Aerial/Underground Splice Enclosure

The Contractor shall furnish and install fiber optic splice enclosures at the locations shown on the plans. The splice enclosure shall be hung from the spanwire supporting the fiber optic cable or placed in a junction box as shown in the plans. The purpose of this splice enclosure is to provide an area for the splicing of fiber optic cable at intersections where there is limited space in the controller cabinet. The splice enclosure shall comply with Bellcore TA-NWT-000771.

All splices made in the enclosure shall be placed into fiber splice trays.

The splice enclosure shall be fully waterproof and re-enterable for system expansion and repair. The splice enclosure shall be cylindrical with access by removing clamps and opening the sealed area (clam shell). Self sealing gaskets shall be used. The enclosure shall place no stress on the finished splices within the tray. Enclosures placed in junction boxes shall be attached to the side of the junction box using bolts or other approved fasteners.

D. Fiber Splice Trays

See Section 711 – Fiber Optic Cable

E. Tray Housing

See Section 711 – Fiber Optic Cable

804.03 - Measurement and Payment

Method of Measurement – The Fiber Optic Splice Cabinet will be measured in units of each (EA).

Basis of Payment – The contract unit price per cabinet shall be based on the following work tasks:

1. Fiber Splice Cabinet, Base-Mounted will be measured in units of each and will be paid at the contract unit price per each. The price shall include cabinet, all mounting hardware (including the concrete foundation and base adaptor for base mounted cabinets), splice trays, tray housings, interconnect sleeves, and other splicing apparatus.

2. Fiber Splice Cabinet, Rack Mounted will be measured in units of each and will be paid at the contract unit price per each. The price shall include cabinet, hardware necessary to attach the enclosure in the traffic signal cabinet, splice trays, other splicing apparatus, fusion splices, pigtails and fiber optic jumpers.

3. Fiber Optic Splice Enclosures will be measured in units of each and will be paid for at the contract unit price per each. This price shall include the hardware necessary to attach the enclosure to the messenger wire or junction box (whichever is applicable), splice trays, other splicing apparatus, fusion splices, and drop cable assemblies.

4. Fiber Splice Trays shall be included in the cost of Fiber Splice Cabinet, Base-Mounted, Fiber Splice Cabinet, Rack Mounted, and Fiber Optic Splice Enclosure. Fiber Splice Trays will be measured in units of each and paid for at the contract unit price per each if furnished and/or installed separate from a proposed fiber splice cabinet or enclosure.

5. Tray Housing shall be included in the cost of Fiber Splice Cabinet, Base-Mounted and Fiber Splice Cabinet, Rack Mounted.

End of Section

SECTION 810 - EMERGENCY PRIORITY SYSTEM

810.01 - Description

This work shall consist of furnishing and installing emergency priority system in accordance with these specifications and as shown on the plans or as directed by the Engineer.

810.02 - Equipment

Emergency priority system shall be optically activated providing all features and functions as the existing equipment within the City of Norfolk's emergency priority system and shall fully interface with existing equipment. Existing equipment consists of 3M's: Model 711 Single Channel – One Direction Optical Detector; Model 721 Single Channel - Two Direction Optical Detectors; Model 722 Dual Channel (two outputs) – Two Direction Optical Detectors, Model 764, Dual Priority, Dual Mode, Infrared/GPS Phase Selectors necessary to interface the priority detection devices to the controllers. Phase selectors are configured for installation directly into the input file slots of the Type 170 traffic controllers in the signal cabinet. When input file space is not available, the 3M Model 760 Card Rack and wiring harness is required. Depending on the specific project a 3M Model 758 Auxiliary Interface Panel and Cable may be used to provide connection for auxiliary detection and/or activation of confirmation lights.

The Conductor cables, 3M Model 138 detector cable, between the optical detectors and the phase selector(s) shall be installed in accordance with the manufacturer's recommendations. Typically this is a direct connection to the lower input file rear terminals based on the channel configuration. Transient protection for the cables shall be in accordance with VDOT Specifications Section 703.02(d) 3b.

Mounting assemblies for the Optical Detectors shall be fabricated from corrosion resistant materials or shall be galvanized.

810.03 - Procedures

Locations of optical detectors shown on Project Plans are approximate; exact locations shall be as required for proper alignment. Installation of all emergency priority system equipment shall be in accordance with the manufacturer's recommendations. The Contractor shall provide all equipment necessary to completely install this equipment including programming the phase selectors. The software required for programming the phase selectors shall remain the property of the Contractor. The City of Norfolk shall be provided with a copy of each intersection's programmed database on a read/writeable CD ROM. Emergency priority system conductor cables shall be permanently identified in accordance with VDOT Specifications Section 703.03(g) except tags shall indicate identification of the optical detector and the direction of approach. The Contractor shall provide the manufacturer's installation, operational and maintenance manuals for each piece of equipment to the Engineer.

810.04 - Testing

Testing of the emergency priority system shall be accomplished in the presence of the Engineer or their assigned representative. The Contractor shall provide the City of Norfolk with an emergency priority system acceptance test procedure for approval prior to scheduling any system testing. The Contractor shall contact the Engineer (757-664-7300) 72 hours in advance to arrange priority/preemption system acceptance testing. The Contractor shall have the manufacturer's representative on site for testing and set up of the emergency priority system. The City of Norfolk will provide an operator and vehicle equipped with an emitter for the test to determine if equipment is operating and logging properly. Deficiencies shall be corrected and faulty equipment replaced by the Contractor at no expense to the City of Norfolk.

810.05 – Measurement and Payment

Method of Measurement:

The installation of an Emergency Priority System is location and configuration dependant. Therefore the Method of Measurement is based on a summary of the quantity of the following components required for the specific Project.

A. **Furnish and Install Emergency Priority System Optical Detector** will be measured in units of Each (EA) for each **Optical Detector** unit, based on type, supplied for the system shown in the project plans.

B. **Furnish and Install Emergency Priority System Phase Selector** will be measured in units of Each (EA) for each **Phase Selector** unit, based on type, supplied for the system shown in the project plans

C. **Furnish and Install Emergency Priority System Model 760 Card Rack** will be measured in units of Each (EA) for each **Card Rack** supplied for the system shown in the project plans

D. **Furnish and Install Emergency Priority System Model 758 Auxiliary Interface Panel** will be measured in units of Each (EA) for each **Auxiliary Interface Panel** supplied for the system shown in the project plans

E. **Furnish and Install Emergency Priority System Conductor Cable** between the optical detectors and the phase selector(s) will be measured in units of linear feet (LF) and will be paid for at the contract unit price per linear foot.

Basis of Payment:

A. **Furnish and Install Emergency Priority System Optical Detector**: The unit price for each furnished and installed **Optical Detector** shall include the detector, mounting assembly, transient protection and all system documentation, labor, equipment, tools, calibration/alignment and testing and incidentals necessary for a complete and accepted installation in accordance with this section. Connecting the Optical Detector to the cable is incidental to the cost of the detector.

B. **Furnish and Install Emergency Priority System Phase Selector**: The unit price for each furnished and installed **Phase Selector** shall include the phase selector, conductors, mounting assemblies, cabinet connecting cables, wiring harnesses, transient protection and all system documentation, labor, equipment, tools and testing and incidentals necessary for a complete and accepted installation in accordance with this section. All cabinet wiring, component configuration, set-up, programming, diagnostics, calibration, and modifications required for a complete and accepted installation, including operations of auxiliary detectors, operations of confirmation lights, and communications from the Priority System are incidental to the cost of the Phase Selector.

C. **Furnish and Install Emergency Priority System Model 760 Card Rack**: The unit price for each furnished and installed **Card Rack** shall include the card rack, conductors, mounting assemblies, wiring harnesses, connecting cables, transient protection and all system documentation, labor, equipment, tools and testing and incidentals necessary for a complete and accepted installation in accordance with this section.

D. **Furnish and Install Emergency Priority System Model 758 Auxiliary Interface Panel** The unit price for each furnished and installed **Auxiliary Interface Panel** shall include the auxiliary interface panel, conductors, mounting assemblies, manufacturer recommended connecting cables, transient protection and all system documentation, labor, equipment, tools and testing and incidentals necessary for a complete and accepted installation in accordance with this section. For installation of an auxiliary interface panel with an existing Priority System all wiring, component configuration, set-up, programming, diagnostics, calibration, modifications and testing are incidental to the cost of the Auxiliary Interface Panel.

E. **Furnish and Install Emergency Priority System Conductor Cable**: The unit price for furnished and installed **emergency priority system conductor cable** shall include the cabling, labor, equipment, tools and testing and incidentals necessary for a complete and accepted installation in accordance with this section.

End of Section

SECTION 820 – OPTICAL VIDEO DETECTION

820.01 - Description

This section describes the minimum design standard for the equipment requirements for non-intrusive optical vehicle detection system that detects vehicles for presence. The detection system shall conform to these specifications. The non-intrusive vehicle detection system shall be by means of a video camera mounted at or near the intersection and shall detect all legal vehicles and pedestrians. The system shall be housed in either a standard 336, 332L or 332L Stretch S 170-Type cabinet. The vehicle detection system shall NOT require a separate PC or software to setup, maintain or operate. Detection is established by processing an image provided by a video camera. The detection algorithms shall have a proven record of field use at other installations for at least three (3) years of service. The detector board (Video Image Processor) shall work with any video source and shall be capable of outputting the video signal (image) to a remote site. The system shall be capable of monitoring vehicles by providing video detection for areas outlined in the project plans and by providing vehicle counts in zones/lanes identified in the project plans. Each detector shall incorporate a fail safe operation if the video signal is lost or is of poor quality. The video detection system's Video Image Processor (detector) shall be a TRAFICON model VIP3D.1 or VIP3D.2 (depending on field conditions or as directed by the Engineer) or approved equal. The detection needs of the intersection determine the total number of optical detectors (cameras) and video image processors (VIP modules) required. Each traffic signal cabinet or system detector cabinet will require only one (1) Communication Module and only one (1) video monitor.

820.02 – Hardware Components and Requirements

The Video Detection System shall consist of the following components and requirements:

- Video Detection Module VIP-IP (detector board)
- ViewCom/E MAX+ - Remote Monitoring and Image Storage Module. (Communication Module)
- IP Video Camera(s) with IR Filter, Lens, Enclosure, and Sunshield.
- Luminaire Arm or Signal Mast Arm Sensor Bracket(s).
- Ethernet/Power/Control Cable
- Surge Suppression for the Ethernet cable, power and camera control conductors..
- Programming Devices and/or Software.
- All Other Necessary Equipment for Operation.
- Training for Installation, Operation, and Maintenance.

a) The detector shall be modular by design and is installed (Plug-in) directly into a standard Type-170 Controller input file, in place of a loop detector card. The detector shall be powered from AC mains.

b) The system shall control from 1 to 8 detectors for at least one camera for each detector.

c) The system shall meet or exceed all NEMA TS-1, TS-2, and Type 170 environmental specifications for operating conditions. The operating temperature range shall be from -35 to +74 degrees Centigrade and at 0 to 95% relative humidity non-condensing.

d) The system shall utilize 12-40 VDC and draw less than 2 amperes. Surge ratings shall be as set forth in the NEMA TS-1 and TS-2 Specifications.

e) Serial communications shall be through an RS-232 serial port. This port shall be used to communicate to a modem, laptop PC to upload/download detector configurations, count data and software upgrades.

f) A RS485 on the rear edge connector shall facilitate communications to other detector boards and the ViewCom/E MAX+.

g) The VIP3D.1 board shall have 1 video input; the VIP3D.2 board shall have 2 video inputs (RS-170 NTSC or CCIR composite video) and one video out.

h) Each detector board shall have 4 opto-isolated open collector outputs. Twenty (20) additional outputs shall be available via the expansion port. The VIP/3D shall have 20 presence detection zones and 4 data detection zones per camera. Data zones shall collect and store vehicle counts, volume, speed, gap time, headway, occupancy, and classification. Data shall be time-stamped (6713 intervals) and stored onboard (non-volatile memory) in intervals from 1-60 minutes.

i) Each detector board shall allow for 20 digital inputs via the I/O Expansion port.

j) Each detector board shall have error detection. Outputs will be turned “ON” if the video signal is bad or the VIP board is not functioning properly. A user defined quality level will automatically put selected outputs to recall in cases of severe degraded visibility (i.e., fog, blizzard, etc.). Normal detection resumes when visibility improves above the user defined quality level.

k) Operator selectable recall shall be available via the detector board front panel. Holding the recall switch on for 5 seconds shall activate this function.

l) A video select button on the detector board front panel will switch between camera images of the VIP3D.2.

m) The detector board shall have a reset button on the front panel to reset video detectors to “learn” the roadway image. During “relearn”, selectable recall can be enabled or disabled for immediate operation. Learning time of video detectors shall be less than 6 minutes.

n) External surge suppression, independent of the detector board shall separate the detector board from the image sensor.

o) The detector (VIP board) shall have separate light emitting diodes (LED) that indicate the following:

POWER	Red Led to verify power supply.
I/O COMM	Red Led to indicate communications to expansion boards.
VIDEO 1 & 2	Red Led to verify the presence of video input 75 Ohm.
TX & RX	Red Led to indicate communications to other VIP modules via the RS485.

OUT1- OUT4 Green Led if the corresponding detection group is active.

The VIP board shall also have 2 separate buttons for:

VIDEO SELECT –RECALL

RECALL	Manually places call on detectors.
RESET	Manually reset detectors to “learn” new background.
VIDEO OUT	The VIP board shall also have a video out female RCA style connector.
SERVICE	B9 female Service port and DB9 I/O Expansion port.

The VIP Expansion board shall also have separate LEDs that indicate:

POWER	Red Led to verify power supply.
COMM	Red Led to indicate communications to VIP board.
I/O1- I/O4	Green Led if the corresponding detection group is active.

The VIP Expansion board shall have 8 dip switches that define inputs and outputs used (range: 1-12 or 13-24).

p) Ethernet communications from the ViewCom/E MAX+ shall be through an RJ-45 port. This port shall be used to communicate to a laptop PC or Ethernet switch to upload/download detector configurations, count data and software upgrades.

q) The ViewCom/E MAX+ shall be capable of transmitting video using MPEG-4 or H.264 video compression technology; it shall provide real-time video streams over the STC network, with traffic detection information included. It shall support standard Real Time Streaming Protocol (RTSP) for delivering video at full frame rate.

820.03 – Detector Board Functional Requirements

a) Each Detector shall be capable of processing the video signal of one or more cameras. The video shall be analyzed in "real time". The detector shall detect the presence all legal vehicles or pedestrians within the view of the connected camera. User programmable areas shall be defined by keypad or other device not requiring a PC or other software device. Each detector shall detect vehicles in a minimum of eight zones.

b) Each detector board shall be capable of processing the video signal of one or two cameras. The video signal shall be analyzed in real time (30 frames per second)

c) The system shall be expandable up to 12 cameras that may be connected to different detector units and programmed independently.

d) The system shall be capable of displaying detectors on the video image with associated outputs. Outputs/Inputs status will be indicated on the screen. Parameters will also include the ability to view raw video without any verbiage and/or detectors for surveillance purposes.

e) Each detector board will detect within the view of the connected camera the presence of vehicles in user defined zones. Detectors available shall be presence, count, delay, extension, or pulse mode for either arrival or departure of vehicles. Delay and extension shall be defined between 0.1 – 99.9 seconds and pulse mode between 0 – 200ms in 33ms increments if NTSC is used. Each detector board shall also detect and collect within the view of the connected camera traffic data of passing vehicles in user-defined zones.

f) Collected traffic data by direction shall include:
   - Volume (absolute numbers) per length class and per lane.
   - Average speed (km/h or mph) per length class and per lane.
   - Average gap time (1/10 sec) per length class and per lane.
   - Average headway (m or feet) per lane.
   - Occupancy (%) per lane
   - Concentration (vehicles/km or mile) per lane.
   - Average length (m or feet) per lane.
   - Confidence level (0-10) per lane.

g) The detector board shall be programmed without the use of a supervisor computer. A standard CCTV monitor and keypad plugged into the detector board's serial port will facilitate detector programming. In addition, a standard laptop or PC plugged into the network will facilitate detector programming. The standard CCTV monitor is required to be as recommended by the optical detection system's manufacturer.

h) The detector board shall store up to 4 detector configurations. It shall be possible to switch between detector configurations manually, automatically by time of day or remote input.

i) Via the Ethernet port, detector configurations can be uploaded to a laptop and stored on disk.

j) Detectors may be linked to 24 outputs and 20 inputs using Boolean Logic features: AND, OR, NOT. It will be possible to generate conditional outputs based upon inputs from a controller.

k) It shall be possible to make a detector directional sensitive. Options will include an omni-directional detector or a detector that only senses movement: from right to left, left to right, up to down or down to up as you look at the monitor.

l) All detectors and parameters can be changed without interrupting detection. For example: when one detector is modified all existing detectors continue to operate, including the one that is being modified. When the new position is confirmed, the new detector will enter a learning phase. Once the new detector is in function it will take over the job of the old one. In this way, the detector is always fully operational with no interruption on any detector, even during modification. Learning phases for new detectors shall not exceed 6 minutes.

m) Four data detection zones per camera on a two camera detector board may be used for collection of vehicle count, speed, classification, occupancy, density, headway, and gap time. Eight data detection zones may be used on a single camera detector board. These detectors will detect and store traffic data at user-defined intervals of 1, 2, 3, 5, 6, 10, 15, 30 & 60 minutes. It shall be possible for each detector board to store up to 6713 intervals of data in non-volatile memory.

n) Associated software may be used with a PC to download data and export to a spreadsheet. Software will also be used to upload and download detector configurations, traffic data, and technical events, send software versions upgrades and do remote setup of detectors.

o) The detector board shall have an internal clock with daylight saving time system, which can be enabled or disabled.

p) The detector board shall provide overlaid tool tips for each individual menu and submenu-items.

q) The detector board shall have an optional password implementation. Different user-levels shall be available each having different rights. A minimum of 10 users can be defined for each user-level.

r) The detector board shall be able to delay or extend a detector zone output in combination with an input from the controller.

s) The detector board shall detect wrong-way drivers and shall provide an alarm/event via communication board and/or output.

t) The detector board shall provide an alarm and/or output when the user selected queue detection threshold of occupancy is exceeded for more than a user selected time threshold.

u) The detector board shall distinguish five classes of detected vehicles based upon user selectable vehicle length thresholds.

v) The detector board shall be able to emulate loop emulation with user selectable loop dimensions.

w) When a vehicle is within a detection zone and approaching from the proper direction, the detection zone shall change appearance so as to graphically identify a call.

x) The detection zones shall be capable of being direction sensitive and programmable to avoid false calls.

y) Each detection zones shall be able to detect the presence of vehicles during day and night periods. The minimum accepted accuracy during normal day and night time conditions is 98% & 96% during adverse conditions (fog, rain, snow, sleet).

z) The detector shall detect all vehicles given any standard video source. No special system cameras shall be necessary.

aa) The contractor shall submit a vendor recommended Video Detection System test procedure to the Engineer for approval prior to final Video Detection System acceptance testing.

820.04 – VIP Communications Module (VIEWCOM/E MAX+)

a) The VIEWCOM/E MAX+ board shall be modular by design and fit directly into Type 170/2070 input files.

b) The VIEWCOM/E MAX+ shall only occupy a single detector file slot. The VIEWCOM/E MAX+ shall be 1.1” (w) x 4.5” (h) x 7” (l)

c) The VIEWCOM/E MAX+ board shall control from 1 to 4 VIP boards allowing for 1 to 8 image sensors. And 2 Auxiliary video inputs shall be available for connecting PTZ or other cameras.

d) The VIEWCOM/E MAX+ shall be designed to operate reliably in the adverse environment of roadside cabinets and shall meet or exceed Type 170/2070 environmental specifications.

e) Ambient operating temperature shall be from –34 to +74 degrees Centigrade at 0 to 95% relative humidity non-condensing.

f) The VIEWCOM/E MAX+ shall be powered by 12-24 VDC and draw less than 2 amperes.

g) Serial (Programming Keypad) and Ethernet (TCP/IP) communications shall be through respectively a 3.5mm Stereo Jack port and Ethernet port (RJ-45 connection). These ports can be used for local programming of the VIEWCOM/E MAX+, communication to

upload/download detector configurations, traffic data, technical events, send software upgrades and do remote setup of detectors. RS485 on the rear edge connector shall facilitate communications to VIP boards.

h) Surge ratings shall be set forth in the NEMA TS1 and TS2 specifications.

i) The Communication board shall have separate light emitting diodes (LEDs) that indicate:

- POWER Red LED to verify power supply.
- SERIAL RS232 communications to third party devices.
- VIDEO OUT Female RCA style connector.
- RESET Manual reboot to re-initialize board.
- KEYPAD 3.5 mm Stereo Jack port for setup of communication board.
- LAN RJ-45 port for Ethernet communication.

j) The VIEWCOM/E MAX+ shall provide a 3.5mm stereo jack port (for programming keypad) and Ethernet interface and communication to provide traffic data and allow remote configuration from the Traffic Operations Center.

k) The LAN port shall meet IEEE 802.3 with a RJ-45 connector and meet the following specification:

- Data rates for Ethernet via LAN port: 10/100Mbps TCP/IP based protocol

l) All data transmissions shall be protected by CRC (cyclic redundancy checking) or an equivalent error detection method.

m) The communication board shall be programmed without the use of a supervisor computer. A standard CCTV monitor and keypad plugged into the communication serial port will facilitate board programming.

n) The communication shall support H.264/MPEG-4/MJPEG dual streaming video over Ethernet with the following programmable parameters:

- Dual Video Encoder selection (per video encoder):
  - Video encoding: H.264, MPEG-4 or MJPEG
  - Views: Single, Quad, PiP (Picture in Picture) and Compass View
  - Frame rate programmable from 1 to 30 frames/second
  - Programmable bit/data rate of up to 8 Mbps
  - Resolutions: Full D1, VGA, QVGA, CIF, QCIF

- Video Stream:
  - Network Protocol: RTP/UDP, IP unicast or multicast IPV4
  - Transport Protocol: RTSP over TCP
  - Supported players: VideoLAN VLC, Apple©Quicktime

o) Password protected remote setup (configuration upload/download, setup of detectors and detector parameters, setup of communication board parameters, firmware updates for Communication and VIP module) and monitoring of every connected VIP module shall be possible.

p) The VIEWCOM/E MAX+ shall log traffic data and events provided by the VIP module(s) and transmit data and events to the HOST computer.

q) The VIEWCOM/E MAX+ shall send the traffic data from the VIP boards at a programmable interval from 10 seconds to 60 minutes.

r) RS485 communication to every VIP card shall be established via the Edge connector.

s) A (via Ethernet) connection with any standard Internet browser shall be possible to communicate with the VIEWCOM/E MAX+ for remote set-up, monitoring and real-time traffic data (count, speed, occupancy) of the VIP modules.

t) Password protection shall be provided on the VIEWCOM/E MAX+ for remote operations.

u) Remote VIEWCOM/E MAX+ and VIP firmware upgrades shall be possible via Ethernet communication.

v) The VIEWCOM/E MAX+ supports SNMP management per RFC 1213.

w) The VIEWCOM/E MAX+ shall have the option to connect to an NTP server for date and time synchronization where available.

x) If no NTP server is available, the user shall be able to remotely send a time synchronization via the VIEWCOM/E MAX webserver page. This will synchronize date and time to the communication modules and also the VIP connected boards automatically.

820.05 - Image Sensor Camera

A high resolution color or black and white CCD camera of appropriate focal length shall be provided. The video detection system shall use the video signal from this camera to detect vehicles. The camera shall produce a noise free signal at scene luminance of 0.2 lux. The image sensor shall have an automatic gain control, automatic iris and black level clamping.

The camera shall be housed in a NEMA-4 water-resistant, dust proof enclosure. The camera shall come equipped with all necessary filters, mounting brackets, hardware, cabling and incidentals for a complete and accepted installation.

The camera unit shall be a high resolution, 1/4” image format CCD camera, designed for professional video surveillance systems. Incorporating the latest in CCD technology, the video camera shall provide detailed video without lag, image retention, or geometric distortion.

- Temperature range — -5 to + 45 degrees C
- Humidity — 5% to 95% relative, non-condensing
- Camera mounting slots — 1/4-20, top and bottom
- Connectors — RJ-45 10BASE-T/100BASE-TX Terminal block for 1 alarm input, 1 output and alternative power
- Lens mount — CS
- Finish — Off-white semi-gloss polyurethane
- Construction — All metal housing
- Power — 7 – 20 V DC max., PoE IEEE 802.3af Class 2
- Nominal power — 7 Watts
- Imager — 1/4” Progressive scan RGB CCD
- Video compression — MPEG-4 Part 2 (ISO/IEC 14496-2) Motion JPEG
- Resolution — 160x120 to 640x480
- Frame rate MPEG-4 H.264 — Up to 30 fps
- Video streaming — Simultaneous MPEG-4/H.264 and Motion JPEG Controllable frame rate and bandwidth
- Image settings — Compression, color, brightness, contrast, white balance, exposure control, rotation, fine tuning of behavior at low light
- API — Applications Programming Interface for software integration

820.06 – Image Sensor Lens

The camera lens shall be a motorized vari-focal 6.5-65mm with auto iris.

- Image format — 1/4 inch
- Focal length — 10X zoom (6.5-65mm)
- Iris range — f 1.4 – Approx. 360 (With ND Spot Filter)
- Back focus distance — 9.85mm (in air)
- Lens mount — CS
- Iris control — DC 4-pin square
- Focus control — Motorized
- Zoom — Motorized

820.06 – Image Sensor Housing and Mounting Brackets

a) The environmental housing shall be an aluminum enclosure designed for outdoor CCD camera installations.

- Temperature range — -40 to +122 degrees F
- Housing mounting — Three 1/4-20 tapped holes

• Camera mounting	Removable cradle assembly
• Cable entry	Three liquid-tight fittings that will accept cable diameters of: One fitting - 2 to 7 mm; Two fittings - 3 to 10 mm
• Finish	Light gray semi-gloss polyurethane
• Construction	Extruded aluminum housing, Aluminum rear-end cap, Aluminum front cap with glass face plate, and aluminum cradle. A sunshield shall be included.
• Window	3 mm thick glass that includes a Thermostatically-controlled window Heater/defogger strip
• Rated input voltage	115 VAC, 50/60 Hertz
• Voltage range	108 VAC to 132 VAC
• Output voltage	24 VAC, 50/60 Hertz
• Nominal power	30 Watts (Heater requires 10 watts)
• Enclosure protection	Waterproof and dust-tight, IP68, Designed to meet NEMA-6P

b) Mast arm installations shall be mounted at a sufficient height to prevent occlusion from cross traffic between the stop bar and the mast arm on which the camera is installed. A six- (6) ft. maximum length of internally reinforced tube shall be attached to the mast arm bracket for camera mounting above the mast arm. Camera shall be mounted to the top of the tube with the camera manufacturers recommended bracket. Camera bracket shall provide adjustments for both vertical and horizontal positioning for the camera. Camera attachments shall be designed to securely fasten the camera to prevent the extension tube from falling into the path of vehicles and/or becoming loose. Miscellaneous hardware shall be stainless steel or galvanized steel. The cameras and associated pole/arm attachment unit shall be designed to withstand a wind load of 90 MPH with a 30-second gust factor.

c) Luminaire arm installations shall be installed on the luminaire arm, with the camera/video manufacturers recommended brackets. Camera luminaire brackets shall provide adjustments for both vertical and horizontal positioning of the camera. Camera attachments shall be designed to securely fasten the camera to the luminaire arm. Miscellaneous hardware shall be stainless steel or galvanized steel. The cameras and associated pole/arm attachment unit shall be designed to withstand a wind load of 90 MPH with a 30-second gust factor.

820.07 – Installation & Training

A certified representative of the video detection system shall be present to advise installer on proper selection of focal length (camera lens), mounting height, and detection zone setup. The product supplier of the video detection system shall supervise the installation and the testing of the video equipment. A factory certified representative from the manufacturer shall be on-site during installation. The factory representative shall install, make fully operational, and test the system as indicated on the intersection drawings and this specification.

Two days training shall be provided to personnel of the contracting agency in the operation, setup, and maintenance of the video detection system and communication module. Instruction and materials shall be produced for a maximum of 10 persons and shall be conducted at a

location selected by the contracting agency. The contracting agency shall be responsible for travel, room and board expenses for its own personnel.

The Contractor shall provide training of City staff on installation and setup of video detection system and/or the communication module if requested by the Engineer.

The Contractor shall provide all documentation on system components necessary to operate and maintain the system.

The Contractor shall supply the Ethernet/power cable from camera to video processor.

820.08 - Warranty

All components of the video detection system shall be warranted against manufacturing detects in material and workmanship for a period of three years from date of installation or thirty months from date of shipment, whichever comes first. The video detection supplier shall provide all documentation necessary to maintain and operate the system.

820.09 – Measurement and Payment

Method of Measurement - The video detection will be measured in units of each (EA) for each video processor board; each (EA) for each optical detector (camera) supplied and installed; and each (EA) for each VIP Communications Module (VIEWCOM/E MAX+). The video detection system conductor cable will be measured in units of linear feet (LF) between the optical detectors, the surge suppressors, and the video processor board.

Basis of Payment - The contract unit price of each per system and the contract unit price of linear feet for conductor cable shall be based on the following work tasks.

A. Install Video Detection Optical Detector (Camera): The unit price to install a Video Detection Optical Detector (camera) shall consist of the tools, equipment, labor and incidentals necessary for a complete and accepted installation in accordance with Section 820 of this specification. Camera, camera housing, mounting brackets, camera lens, filters, miscellaneous fittings and connectors, material, and hardware shall be provided by the City.

B. Install Video Detection Video Processor Board: The unit price to install a Video Detection Video Processor Board (VIP3D.1 or VIP3D.2) shall consist of the tools, equipment, labor and incidentals necessary for a complete and accepted installation in accordance with Section 820 of this specification. Video processor board, mounting devices, adapters for 170 cabinets, internal cabinet cabling, miscellaneous fittings and connectors, surge protection, camera alignment, setup of detection zones, set up of counting zones, shall be provided by the City. A Video Detection System acceptance test procedure shall be conducted as a requirement for final acceptance.

C. Furnish and Install Video Detection Optical Detector (Camera): The unit price to furnish and install a Video Detection Optical Detector (camera) shall consist of the camera, camera housing, mounting brackets, camera lens, filters, miscellaneous fittings and connectors, material, that conforms to Section 820 of this specification, shipping costs, hardware, tools, equipment, labor and incidentals necessary for a complete and accepted installation in accordance with Section 820 of this specification.

D. Furnish and Install Video Detection Video Processor Board: The unit price to furnish and install a Video Detection Video Processor Board (VIP3D.1 or VIP3D.2) shall consist of the video processor board, mounting devices, adapters for 170 cabinets, internal cabinet cabling, miscellaneous fittings and connectors, surge protection, camera alignment, setup of detection zones, set up of counting zones, and material, that conforms to Section 820 of this specification, shipping costs, hardware, tools, equipment, labor and incidentals necessary for a complete and accepted installation in accordance with Section 820 of this specification. A Video Detection System acceptance test procedure shall be conducted as a requirement for final acceptance.

E. Furnish and Install Video Detection Conductor Cable: The unit price to furnish and install Video Detection Conductor Cable shall consist of all material, shipping costs, hardware, tools, equipment, labor and incidentals necessary for a complete and accepted installation in accordance with Section 820 of this specification.

F. Furnish and Install VIP Communications Module (VIEWCOM/E MAX+) The unit price to furnish and install VIP Communications Module shall consist of all material, shipping costs, hardware, tools, equipment, labor and incidentals necessary for a complete and accepted installation in accordance with Section 820 of this specification. A Communications Module System set-up and acceptance test procedure, recommended by the manufacturer, shall be conducted as a requirement for final acceptance. The contractor and/or manufacturer representative is required to coordinate with City of Norfolk personnel to configure an IP-Address schema. This set-up shall establish the communication between the VIP 3D.1 or VIP 3D.2 detector boards. The set-up and test shall demonstrate remote access to VIEWCOM/E MAX+ via the internet browser to allow for real-time monitoring of the VIP 3D.1 or VIP 3D.2 detector boards (streaming video) and board setup(s) (VIP 3D.1 or VIP 3D.2 detector boards and VIEWCOM/E MAX+ board).

G. Furnish Standard CCTV Monitor: There is no measurement and payment for providing a standard CCTV monitor. The contractor is required to provide one (1) standard CCTV monitor for each intersection that Video Detection is being installed at. The cost of the standard CCTV monitor is incidental to the installation of Video Detection at the intersection.

End of Section

SECTION 821 —THERMAL VEHICLE DETECTION

821.01 - Description

This section describes the minimum design standard for the equipment requirements for non-intrusive thermal vehicle detection system that detects vehicles for presence. The detection system shall conform to these specifications. The non-intrusive vehicle detection system shall be by means of a thermal camera mounted at or near the intersection and shall detect all legal vehicles. The system shall be housed in either a standard 336L or 332L 170-Type cabinet. The vehicle detection system shall NOT require a separate PC or software to setup, maintain or operate. Detection is established by processing a thermal image provided by a thermal imaging camera. An approved thermal vehicle detection system shall conform to the following specifications at a minimum.

821.02 — Hardware Components and Requirements

The Thermal Vehicle Detection System shall be based on the Traficon VIP 3D.2 unit or approved equivalent. The vehicle detection system shall consist of the following:

- Single Slot Video Image Processing unit(s).
- Single Slot MPEG-4 Video system communications module.
- Thermal camera(s) with sunshield.
- Signal Mast Arm Sensor Bracket(s).
- Surge suppressor.
- Monitor.
- PIM card (Port Interface Module)
- All other necessary equipment for operation.

The thermal detection system shall be warranted against manufacturing defects in materials and workmanship for a period of two years from date of installation. The thermal detection supplier shall provide all documentation necessary to maintain and operate the VIP system.

Life expectancy of the thermal detection cameras and VIP boards shall be a minimum of five (5) years.

1. Video Image Processor (VIP):

The video processor shall be a Traficon VIP 3D.2 module. The Video Image Processor (VIP) shall be modular by design and housed in either a self-contained stand-alone unit or fit directly into NEMA TS1 & TS2 type racks. The VIP shall be interchangeable between a shelf or rack mount installation without replacing or modifying existing VIP units.

Supply one VIP 3D.2 card for every 2 cameras installed.

The VIP shall allow for 2 camera inputs and shall only occupy a single detector file slot. The VIP shall be 1.1" (w) x 4.5" (h) x 7" (l)

The system shall control from 1 to 4 VIP boards allowing for 1 to 8 image sensors.

The system shall be designed to operate reliably in the adverse environment of roadside cabinets and shall meet or exceed all NEMA TS1 and TS2.

Ambient operating temperature shall be from —34 to +74 degrees Centigrade at 0 to 95% relative humidity non-condensing.

The system shall utilize cabinet 24 VDC for rack mount installations or external 24 VDC for stand-alone shelf installations, and shall draw less than 2 amperes.

Surge ratings shall be set forth in the NEMA TS1 and TS2 specifications.

Serial communications shall be through an RS232 serial port. This port can be used for communications to a modem or laptop to upload/download detector configurations, count data and software upgrades. RS485 on the rear edge connector shall facilitate communications to other VIP boards.

Each VIP board shall have 4 opto-isolated open collector outputs. Twenty (20) additional outputs shall be available via the expansion port. An RJ-11 style port shall connect the VIP to the VIP expansion card.

Each VIP board shall allow for 20 digital inputs via the I/O Expansion port.

VIP expansion card shall allow for 2 or 4 outputs and shall occupy a single detector file slot. The VIP shall have 20 presence detection zones and 4 data detection zones per camera.

Data zones shall collect and store vehicle counts, volume, speed, gap time, headway, occupancy, and classification. Data shall be time-stamped and stored onboard (non-volatile memory) in intervals from 1-60 minutes.

Data and event alarms are generated for: queue, inverse direction, speed drop, no video/bad video (image quality) communication error and other events.

Must be able to provide single or double loop emulation.

Presence hold time must have parameters that range from 10 to 600 seconds.

Each VIP board shall have error detection. An output contact will close if the video signal is bad or the VIP board is not functioning properly. A user defined quality level will automatically put the VIP into a recall state in cases of severe degraded visibility (i.e., fog, blizzard, etc.). Normal detection resumes when visibility improves above the user defined quality level.

Operator selectable recall shall be available via the VIP front panel. Holding the recall toggle switch for 5 seconds shall activate this function.

Operator shall be able to view each camera on a single VIP card by using the toggle switch on the VIP front panel.

The VIP board shall have 2 video inputs (RS-170 NTSC or CCIR composite video) and two video outputs (one on the front panel and one on the edge connector). The video inputs shall be though the VIP board's edge connector,

The VIP board shall have a reset toggle switch on the front panel to reset video detectors to "learn" the roadway image, During "relearn", selectable recall can be enabled or disabled for immediate operation. Learning time of video detectors shall be less than 5 minutes.

External surge suppression, independent of the VIP board shall separate the VIP from the image sensor.

The VIP board shall have separate light emitting diodes (LEDs) that indicate:

POWER	Red to verify power supply.
I/O COMM	Red to indicate communications to expansion boards.
VIDEO 1 & 2	Red to verify the presence of video input 75 Ohm.
TX & RX	Red to indicate communications via the serial port.
OUT1- OUT4	Green if the corresponding detection group is active.

The VIP board shall also have a toggle switch for:

VIDEO SELECT	Toggle between camera images.
RECALL	Manually places call on detectors.
RESET	Manually resets detectors to "learn" background,

The thermal vehicle detection system shall be capable of being programmed locally with a handheld keypad. Keypad and monitor must be separate units. A PC mouse will not be allowed. The monitor is to have a 9 inch, LCD color screen.

The VIP board shall have a video out female RCA style connector, DB9 female Service port and RJ-11 I/O Expansion port

The VIP Expansion board shall also have separate LEDs that indicate:

POWER	Red to verify power supply.
COMM	Red to indicate communications to VIP board.
I/O1- I/O4	Green if the corresponding detection group is active.

The VIP Expansion board shall have 8 dip switches that define inputs and outputs used (range: 112 or 13-24).

The VIP module shall have an onboard database capable of time stamping and storing 500 events. The Event Log Database can be viewed or downloaded to a selected spreadsheet. Erasure of the Event Log Database shall not alter programmed configurations. As a minimum, the VIP shall log and time stamp the following events:

- Firmware upgrade.
- Loss of video signal.
- Resumption of video signal.
- Configuration change.
- Bad video quality.
- Loss of power to VIP module.
- Resumption of power to VIP module.
- Speed alarm.
- Inverse direction.
- Recall activated.

2. Video System Communications Module:

Supply one VIEWCOM/E MAX+ communications card for every 4 VIP 3D.2 cards supplied.

The VIEWCOM/E MAX+ board shall be modular by design and housed in either a self-contained stand-alone unit or fit directly into NEMA TS1 & TS2 type racks.

The VIEWCOM/E MAX+ shall only occupy a single detector file slot. The VIEWCOM/E MAX+ shall be /,/" (w) x 4,5" (h) x 7" (l)

The VIEWCOM/E MAX+ board shall control from 1 to 4 VIP boards allowing for 1 to 8 image sensors.

The VIEWCOM/E MAX+ shall be designed to operate reliably in the adverse environment of roadside cabinets and shall meet or exceed all NEMA TS1 and TS2 specifications.

Ambient operating temperature shall be from —34 to +74 degrees Centigrade at 0 to 95% relative humidity non-condensing.

The VIEWCOM/E MAX+ shall utilize cabinet 24 VDC for rack mount installations or external 24 VDC for standalone shelf installations and shall draw less than 2 amperes.

Serial (Programming Keypad) and Ethernet (TCP/IP) communications shall be through respectively an RS232 serial port (F DB9 connector) and Ethernet port (RJ-45 connection). These ports can be used for local programming of the VIEWCOM/E MAX+, communication to upload/download detector configurations, traffic data, technical events, send software upgrades and do remote setup of detectors. RS485 on the rear edge connector shall facilitate communications to VIP boards.

Surge ratings shall be set forth in the NEMA TS1 and TS2 specifications.

The Communication boar shall have separate LED's that indicate:

POWER	Red LED to verify power supply.
LAN	Red LED to indicate data activity over Ethernet communication.
VIDEO OUT	Female RCA style connector.
RESET	Manual reset to re-initialize communications.
SERVICE	DB9 female Service port for setup of communication board.

3. PIM Card (Port-1 Interface Module):

Supply one PIM for every eight VIP3D.x units supplied. The PIM provides a direct interface between the Traficon VIP3D.x series video detection modules and any NEMA TS-2 compliant controller unit.

The PIM unit shall support up to 64 channels of detection.

The PIM unit shall meet all the environmental requirements of the NEMA

TS-2. The PIM unit shall be hot swappable.

4. Thermal Sensor- Camera:

Thermal traffic detection cameras (with appropriate lens and housing) shall be supplied with the following minimum specifications.

Array Format (NTSC)	320 x 240
Detector Type	Long-Life, Uncooled VOx Microbolometer
Effective Resolution	76,800
Pixel Pitch	25 µm
Field of View	48º x 37 º (FC-348t, 9 mm) 34º x 26 º FC-334t, 13 mm) 24º x 18 º (FC-324t, 19 mm)
Spectral Range	7.5 µm to 13.5 µm
Focus Range	Athermalized, focus-free
Temperature range	-34 to + 74 degrees C
Humidity	0% to 95% relative
Dimensions	10.8" x 5.4" x 4,4" (with sun shield)
Weight	4.2 lbs. (with sun shield)
Camera mounting slots	1/4-20 threaded holes 1" spacing along centerline front to back
Connectors	BNC and Connector-Free Video Cable Terminal Strip
Composite Video	NTSC
Input voltage	90-240 VAC single phase, 50 Hertz
Power Consumption	1.7 W nominal power at 110 VAC

5. Surge Protection:

A video surge suppressor(s) shall be available for installation inside the traffic signal controller cabinet. The suppressor shall provide coaxial cable connection points to an EDCO CX06-BNCY or approved equal transient suppresser for each image sensor.

Peak Surge Current (8 x 20 us) 20KA

Technology	Hybrid, Solid State
Attenuation	0.1db @ 10Mhz
Response Time	<1 nanosecond
Protection	Line to Ground
Shield to Ground	(isolated shield modules)

Clamp Voltage	6 volts
Connectors	BNC
Impedance	75 Ohms
Temperature	-34 to +74 degrees C
Humidity	0-95% non-condensing
Dimensions	4.5" x 1.5" x 1.25"
UL Listed	UL 497B

A small junction box (rigid PVC) incorporated into the camera mounting bracket will house connections for coaxial cable, camera power, camera zoom focus controls as well as an added surge protector.

6. Thermal Sensor — Housing and Mounting Brackets:

The environmental housing shall be an aluminum enclosure designed for outdoor thermal sensor installations with a light gray semi-gloss polyurethane finish. The housing shall provide up to three liquid-tight fittings to accept necessary power and video cabling with diameters up to 10 mm. The enclosure shall be waterproof and dust tight.

Mast arm installations shall be mounted at a sufficient height to prevent occlusion from cross traffic between the stop bar and the mast arm on which the camera is installed. A six- (6) ft. maximum length of internally reinforced tube shall be attached to the mast arm bracket for camera mounting above the mast arm. Camera shall be mounted to the top of the tube with the camera manufacturers recommended bracket. Camera bracket shall provide adjustments for both vertical and horizontal positioning for the camera. Camera attachments shall be designed to securely fasten the camera to prevent the extension tube from falling into the path of vehicles and/or becoming loose. Miscellaneous hardware shall be stainless steel or galvanized steel. The cameras and associated pole/arm attachment unit shall be designed to withstand a wind load of 90 MPH with a 30-second gust factor.

Luminaire arm installations shall be installed on the luminaire arm, with the camera/video manufacturers recommended brackets. Camera luminaire brackets shall provide adjustments for both vertical and horizontal positioning of the camera. Camera attachments shall be designed to securely fasten the camera to the luminaire arm. Mounting bracket shall be made of aluminum. Miscellaneous hardware shall be stainless steel or galvanized steel. The cameras and associated pole/arm attachment unit shall be designed to withstand a wind load of 90 MPH with a 30-second gust factor.

7. Thermal Sensor — Cable (Coaxial & Power):

Coaxial & Power cable (Siamese) shall be installed in conduits or overhead as indicated in the plans. Coaxial cable shall be suitable for exterior use and in direct sunlight. Power cable will have a minimum of six (6) conductors.

A junction box on the camera bracket arm shall provide access to video and power cable terminations. No soldering shall be required in the field. Coaxial cable will terminate with a "barrel" style BNC connector and power shall be terminated via a small terminal strip or via "wire nuts,"

Coaxial cable will be terminated in the surge suppressor before being connected to the VIP boards.

Power cable will be terminated into a circuit breaker panel provided by the manufacturer and connected to 120 VAC in the controller cabinet.

Description of cables: Composite; 6 Conductors/2 elements: 18awg 6 conductors 7/26 bare copper, .016" polyethylene; 20awg / conductor: solid bare copper, .056" foam polyethylene jacket black, overall .030" PVC jacket black,

	ELEMENT 1	**ELEMENT 2**
Conductors/Pair Count:	6 Conductors	1 Conductor
Gauge & Stranding:	18awg 7/26 BC	20awg Solid BC
Primary Insulation Type:	Polyethylene	Foam PE
Insulation Thickness:	.016"	.056"
Color Code:	White,Red,Blue,Black,Brown	Natural
Shield:	N/A	N/A
Tape:	N/A	N/A
Drain Wire:	N/A	N/A
Braid:	N/A	95% BC
Capacitance:	N/A	N/A A
Print Legend:	N/A	N/A
Jacket Type:	N/A	Polyethylene
Jacket Color:	N/A	Black
Jacket Thickness:	N/A	.035"
Nominal OD:	N/A	.242"
Overall Assembly of Wire:		
Jacket Thickness:	.030"	
Jacket Color:	Black	
Jacket Material:	PVC	

Ripcord:	Yes
Nominal OD:	.512"
Voltage Rating:	600v
Temp. Rating:	75C
Ul Type or Style:	N/A
Print Legend:	TBD
Packaging:	TBA
Copper Weight:	39.87 LBS/MFT
Shipping Weight:	100 LBS/MFT

8. Vehicle Detection Monitor:

Provide a 9" LCD color monitor (portable DVD player configuration) for set up and on-going monitoring of the vehicle detection system. Unit shall be small form and be contained within the auxiliary drawer within the cabinet. Minimum two (2) inputs for receipt of video images from detection equipment and shall be either HDMI, RCA, or DVI.

821.03 — Procedures

Installation of materials shall be accomplished in accordance with the manufacturer's instructions except when otherwise noted. Install the VIP 3D.2 system into the controller cabinet, connect to conductor cable and set up detection zones per signal plans.

Install the vehicle detection as shown on the vehicle detection mounting detail on the signal plans. Install on signal pole mast arm, mounting arms, or brackets as appropriate. All mounting shall be configured to create a fixed camera location.

821.04 - Testing

Testing of the thermal vehicle detection system shall be accomplished in the presence of the Engineer or their assigned representative. The Contractor shall provide the City of Norfolk with a thermal vehicle detection system acceptance test procedure for approval prior to scheduling any system testing. The Contractor shall contact the Engineer (757-664-7300) 72 hours in advance to arrange thermal vehicle detection system acceptance testing. The Contractor shall have the manufacturer's representative on site for testing and set up of the thermal vehicle detection system. Deficiencies shall be corrected and faulty equipment replaced by the Contractor at no expense to the City of Norfolk.

821.05 - Measurement and Payment

Method of Measurement: Vehicle Detection Equipment, Thermal Detection Cameras, and Thermal Detection Monitor will be measured in units of EACH (EA). Thermal Detection Cable will be measured in units of LINEAR FEET (LF).

Basis of Payment - The unit price shall be based on the following work tasks specified.

Furnish and Install Vehicle Detection Equipment - The price for furnished and installed vehicle detection equipment shall include the installation of the video image processor(s) (Traficon VIP 3D.2), the system communications module (VIEWCOM/E MAX+), and the PIM card into the controller cabinet, including rack and harness (if necessary), power supply, connection of conductor cables, and setup of detection zones per the signal plans. Testing of the vehicle detection equipment will be considered incidental and will not be measured or paid for separately.

Furnish and Install Thermal Detection Camera - The price for a furnished and installed thermal detection camera shall include the camera (including lens and housing) and surge protection, and all necessary mounting arms and brackets for installation of the thermal vehicle detection as indicated on the signal plans. Testing of the thermal detection camera will be considered incidental and will not be measured or paid for separately.

Furnish and Install Thermal Detection Cable - The price for furnished and installed thermal detection cable shall include the conductor cable from the camera to the controller cabinet, and all necessary equipment for installation of the thermal vehicle detection cable as indicated on the signal plans.

Furnish and Install Thermal Detection Monitor - The price for a furnished and installed thermal detection monitor shall include the monitor, associated cabling to allow thermal imaging viewing, power supply, and testing of operations.

End of Section

SECTION 825 – WIRELESS MAGNETIC SENSOR VEHICLE DETECTION SYSTEM

825.01 - Description

This section describes the minimum design standards, equipment requirements, and communication requirements for a wireless magnetic sensor vehicle detection system. This vehicle detection system shall be configurable to provide for stop bar detection (with different sized detection zones) operations of a traffic signal cabinet and/or provide for vehicle count station detection. The magnetic sensors need to respond to the change in the earth's local magnetic field resulting from the presence and passage of a vehicle.

The vehicle detection system shall use battery-powered magnetic field sensors installed in the roadbed to communicate the traffic detection data by wireless communication to an aerially mounted receiver at the adjacent roadside. This receiver shall transmit the traffic detection data (via wireless or hardwired) to the local traffic signal cabinet to provide for stop bar detection operations and/or traffic counts. Detection data shall be communicated over TCP/IP via an integrated 10Base-T Ethernet interface. The system shall be scalable, and expandable, to provide detection data to a traffic signal controller using varying quantities of magnetic sensor(s), transceiver(s), and any other device(s) based on the design plans.

825.02 – Hardware Component Descriptions and Requirements

a) **Detection Configuration:** Provide wireless magnetic sensors to detect vehicle traffic such as cars, trucks, and motorcycles. Ensure each sensor is sized for an installation into a minimally intrusive (approximately 4"dia x 3"h) hole in the roadbed. The magnetic sensor shall provide vehicle traffic data for volume and/or occupancy, and shall be configurable to collect accurate speed data. The magnetic sensor shall hold a detection call when a vehicle is stopped in its detection field. The magnetic sensor should be able to simulate a detection zone of a traditional 6' x 6' inductive loop. The installation of the magnetic sensors should also be configurable to simulate different detection zones; such as a 6' x 40' or a 6' x 60' traditional inductive loop. The magnetic sensors shall operate as specified by the intersection design plans and/or operate as vehicle count detectors.

b) **Communication to Wireless Magnetic Sensors:** Provide two-way wireless communication between the magnetic sensor and the transceiver (communication) device. The installation shall ensure that there is no disruption to the wireless communication when the transceiver devices are aerially installed on poles or structures on the side-of or adjacent-to the road. The magnet sensors shall communicate with the transceiver devices from a distance of 125 feet, at a minimum. The wireless communications within the system shall operate in an unlicensed frequency band and avoid interference with other devices operating in

the unlicensed frequency band. The wireless communication devices shall provide for at least 16 frequency channels that are user-configurable.

c) **Component Placement:** Based on the location and lane configuration of the magnetic sensors, optional components may be required to provide optimal communications and system performance. The approximate location for optimal system components are shown on the plans. Final installation locations for optional system components shall be approved by the Engineer. The system components may include but are not limited to:

d) **Wireless Detection System Components:**

i. Battery-powered wireless magnetic sensors installed in-pavement in each traffic lane as shown on the plans.

ii. Serial Port Protocol (SPP) Digital Radios mounted on the side of the roadway, as shown on the plans.

iii. Wireless Repeaters (RPs) mounted on the side of the roadway, serving to extend the radio range of an SPP, as shown on the plans.

iv. Access Point Contact Closure Interface (APCC) cards to provide sensor information processing and support the interface between an SPP and a Type 170 traffic signal controller using contact closure signals.

v. CAT5e outdoor rated bulk cable, installed aerial or in conduit, to provide connectivity and power for communication from the SPP Digital Radio to the APCC Interface Cards, through the Isolation Module.

vi. Isolation (ISO) Module to provide surge suppression and isolation, as well as providing signal conditioning to enhance the communication distance from the SPP and the APCC

vii. Optional Extension (EX) cards to provide additional detector outputs to a traffic controller

viii. Optional Input/output (I/O) Module is used to provide additional communication options, memory option and a battery backed real time clock

ix. Software to control and configure the sensors, APCC, SPP's and RPs

x. Software to store and retrieve detection data

825.03 Wireless Magnetic Sensors

A. Each magnetic sensor shall transmit its detection data within 150 ms of a detected event. The magnetic sensor shall be able to sample the earth's magnetic field at a rate of 128 Hz or faster. Each magnetic sensor shall be able to transmit a unique device identifying code. The magnetic sensor shall automatically recalibrate its threshold values in response to changes in the ambient magnetic field based on user-programmed criteria.

B. Each magnetic sensor shall be manufactured as a single-housing module. The components of the magnetic sensor shall be fully encapsulated within the housing to prevent moisture from degrading the components. The magnetic sensor shall operate at temperatures from -37 degrees F to 176 degrees F. The magnetic sensor shall be equipped with battery-power with an average life expectancy of 10 years when the magnetic sensor is operating under normal traffic conditions.

C. The magnetic detector shall be enclosed in a clear injection molded clamshell style case made of polypropylene, recommended by the manufacturer, for protecting the sensor in the roadway. This case shall protect the magnetic sensor from the sealant material. The case shall hold the sensor in place and is form-fitted to ensure the cured sealant does not collapse when exposed to traffic loads.

825.03 Wireless Magnetic SPP Digital Radio

A. Furnish the transceiver (SSP Digital Radio) to provide detection data to the traffic signal cabinet and ensure the traffic signal controller receives each magnetic sensor detection call. The system configuration shall be capable of traffic signal controller receives both presence mode and pulse mode detection calls.

Provide indications inside the traffic signal cabinet to display each channel detection status and fault condition. Provide a switch inside the traffic signal cabinet to select presence mode and pulse mode for each channel. Provide user-selectable sensitivity levels for vehicle detection. Furnish equipment to operate in Type 332 and 336S traffic signal cabinets.

Provide software for installation and use on personal computers to upload and download configuration data to each sensor. Ensure application software is compatible with Windows 2000 and Windows XP operating systems. Ensure software does not require administrative permissions to load and operate. Ensure the software can retrieve and store detection data from the sensors. Ensure the software on the personal computer transmits data from the personal computer to each sensor through the transceiver by wireless communication. Also, provide any update to the firmware in each sensor by wireless communication. Provide a license to the Department to allow the duplication of the personal computer software as needed to design, install and maintain these systems.

825.03 – Installation and Training

Install the wireless magnetic sensor vehicle detector system in accordance with the manufacturer's recommendations. Enclose the wireless magnetic sensor in a molded clamshell style case before installation into the roadway. When installing each sensor into the hole, ensure epoxy sufficiently covers the sensor in the road surface.

Arrange and conduct site surveys with the system manufacturer's representative and Department personnel to determine proper sensor and transceiver selection and placement. Provide the Department at least 3 working days notice before conducting site

surveys. The Engineer will approve final locations of sensors, transceivers and any necessary repeaters.

Install the transceiver in such a manner that avoids conflicts with other utilities and as specified in the manufacturer's recommendations. Secure the transceiver mounting hardware to the pole and route the cabling such that no strain is placed on connectors.
Before beginning work at locations that require a wireless magnetic sensor vehicle detector system, furnish system software. Upon activation of the system, provide detector configuration files.

Place system into operation. Configure wireless magnetic sensor vehicle detector system to achieve required detection in designated areas. Have a certified manufacturer's representative on site to supervise and assist with installation, set up, and testing of the system.

Install the necessary processing and communications equipment in the signal controller cabinet. Make all necessary modifications to install equipment in cabinet. Ensure the traffic signal controller receives each sensor detection call.

Place a copy of all manufacturer equipment specifications and instruction and maintenance manuals in the equipment cabinet.

Provide at least 4 hours of training on the set up, operation, troubleshooting, and maintenance of the wireless magnetic sensor vehicle detector system to a maximum of ten Department personnel. Arrange for training to be conducted by the manufacturer's representative at an approved site within the Division responsible for administration of the project. Thirty days before conducting training submit a detailed course curriculum, draft manuals and materials, and resumes. Obtain approval of the submittal before conducting the training. At least one week before beginning training, provide three sets of complete documentation necessary to maintain and operate the system. Do not perform training until installation of the wireless magnetic sensor vehicle detector system is complete.

825.04 - Warranty

All components of the wireless magnetic sensor vehicle detection system shall be warranted against manufacturing detects in material and workmanship for a period of two years from date of installation or thirty months from date of shipment, whichever comes first. The wireless magnetic sensor vehicle detection system supplier shall provide all documentation necessary to maintain and operate the system.

825.05 – Measurement and Payment

Method of Measurement - Actual number of wireless magnetic sensor vehicle detector systems furnished, installed, and accepted.
By Each (EA)

No measurement will be made of cables or hardware, as these will be considered incidental to furnishing and installing wireless magnetic sensor vehicle detector system.

Basis of Payment – Wireless Magnetic Sensor Vehicle Detector System……...Each
All mounts, equipment, wiring, labels NOR1 tags.

End of Section

SECTION 830 – FIBER OPTIC MEDIA CONVERTERS

830.01 - Description

This work shall consist of furnishing, installing and testing fiber optic media converters in accordance with these Specifications and as directed by the Engineer. Although Fiber optic media converters are used in 'PAIRS' to connect Ethernet switches over single mode fiber optic cable they will be paid by EACH . Fiber optic media converters shall be Gigabit Interface Connector (GBIC), Small Form Factor Pluggable (SFP) modules and installed in Ethernet switches in locations as shown on the plans. SFP modules shall be compatible with the existing Cisco layer 3 switch optics at the STC and other layer 3 node locations.

830.02 – Design Requirements

The Fiber Optic Ethernet Transceivers shall transmit and receive 100BaseFX data over the designated fiber type as per the plans. Each transceiver shall operate at 1300 nm and have a range of 10 km unless a greater range is required to reach the adjacent switch on the same ring. The Fiber optic media converter (SFP modules) shall be compatible with the proposed Ethernet switches as shown on the plans. The fiber optic media converters shall meet the following requirements:

- Multi-source package with Duplex LC connector (for optical GBIC modules)
- Optical patch cables shall be compliant with GR-326 (single-mode)
- Safety - Laser Class I 21CFR1040
- Hot-swappable
- 4.75VDC input voltage
- -40 to +85 C operating temperature
- -40 to +85 C storage temperature
- Standards
    - Compatible with GBIC standard as specified in IEEE 802.3z
    - Compliant with GBIC Specification Revision 5.4
    - GR-20-CORE: Generic Requirements for Optical Fiber and Optical Fiber Cable
    - GR-326-CORE: Generic Requirements for Single-Mode Optical Connectors and Jumper Assemblies

830.03 – Installation

Install the SFP modules in Ethernet switches in existing controller cabinets in locations shown in the project plans, or as directed by the engineer. Connect LC patch cable to SFP modules as shown in the plans. Secure and neatly route fiber patch cables in the cabinet with appropriate cable ties and strain relief. Provide a minimum of three feet of slack for each cable.

1. Install the SFP module in the Ethernet switch slot.

2. Configure as necessary.

The Contractor shall be responsible for providing a complete, functional system including all necessary cables and connectors in accordance to the specifications and as specified on the plans. All miscellaneous patch and interconnect cables shall meet the proposed equipment specification requirements and shall meet EIA/TIA telecommunications standards.

830.04 – Testing

The Contractor shall provide the City of Norfolk a system acceptance test procedure and documentation form for execution by the Contractor under the supervision of a City of Norfolk Division of Transportation representative. The Contractor will test each fiber optic media converter pair at the cabinet and corresponding location to verify the optical and network connectivity. Upon completion of stand-alone testing and subsequent integration with the Ethernet switches, a similar system level testing shall be performed by the Contractor at the STC in City Hall for proper network performance measures.

830.05 – Measurement and Payment

Furnish Fiber Optic Media Converter will be measured in units of each (EA) and paid for at the contract unit price each. The price includes all materials, cables, labor, tools, equipment, and incidentals necessary to complete the work. All jumper cables and connectors shall be included under this item.

End of Section

SECTION 835 - LAYER 2 ETHERNET SWITCH

835.01 - Description

This work shall consist of furnishing, installing and testing environmentally hardened Layer 2 Cisco **IE-3000-8TC** Ethernet switches in accordance with these Specifications and as directed by the Engineer. This work is the furnishing and installation of an (8) port managed Ethernet switch with single mode fiber-based SFP uplink ports and modules for connection to the fiber network.

835.02 – Design Requirements

The Layer 2 Ethernet switch shall meet the minimum design requirements:

- 8 Ethernet 10/100 ports and 2 Dual-Purpose Uplinks (Each Dual Purpose Uplink port has
- one 10/100/1000 Ethernet Port and one SFP based Gigabit Ethernet port, one port active)
- Each switch shall support two (2) Cisco IE3000-8FE modules, one (1) Cisco IE3000-8FX
- module, or one (1) Cisco IE3000-8FE module and one (1) Cisco IE3000-8FX module
- 10BASE-T ports: RJ-45 connectors, two-pair Category 3, 4, or 5 unshielded twisted-pair (UTP) cabling
- 100BASE-TX ports: RJ-45 connectors, two-pair Category 5 UTP cabling
- 1000BASE-T ports: RJ-45 connectors, four-pair Category 5 UTP cabling
- 1000BASE-SX, -LX/LH, -ZX SFP-based ports: LC fiber connectors (single/multimode fiber)
- 100BASE-LX10, -FX: LC fiber connectors (single/multimode fiber)
- Meets NEMA TS-2 (traffic control equipment)
- The internal power supply shall support voltages between 18VDC and 60VDC
- Environmentally hardened
- -40°C to +70°C operating temperature
- -25°C to +70°C storage temperature
- Weight: 4lbs

835.03 –Functional Requirements

- IGMP Snooping for multicast filtering
- SNMP
- Remote Monitoring
- Port based security
- Standards:
    - VLAN (802.1Q)
    - MSTP (802.1Q-2005)
    - Quality of Service (802.1p)
    - Link aggregation (802.3ad)
    - IEEE802.3 10Base-T Ethernet
    - IEEE802.3u 100Base-TX/100Base-FX
    - IEEE802.3z Gigabit fiber
    - IEEE802.3ab 1000Base-T

- IEEE802.3x Flow Control and Back Pressure
- IEEE802.3ad Port trunk with LACP
- IEEE802.1d Spanning Tree/ IEEE802.1w Rapid Spanning Tree
- IEEE802.1p Class of Service
- IEEE802.1q VLAN Tag
- IEEE802.1x User Authentication (Radius)
- IEEE802.3af Class 1 – 3 Power over Ethernet
- IEEE802.1ab LLD

835.04 – Installation

Prior to installation of the Ethernet Switch, the contractor shall coordinate delivery of the device with the Project Inspector to the City's Smart Traffic Center for programing. The switch shall be delivered at least two weeks prior to the scheduled installation of the device. The Ethernet Switch shall be mounted on din rails on the controller cabinet equipment racks on locations shown in the project plans, or as directed by the engineer. Make power connections from existing power distribution assembly in the controller cabinet. Annotate all electrical cables with the correct connection information and function. Secure and neatly stow all cables and power supply in the cabinet with appropriate cable ties and strain relief. Provide a minimum of three feet of slack for each cable.

1. Mount the switch in the cabinet.

2. Make power and communication connections.

3. Provide power cables, Category 5e or Category 6 patch cords, and LC type single mode patch cords as required and depicted on communications diagrams.

4. Configure switch

The Contractor shall be responsible for providing a complete, functional system including all necessary cables and connectors in accordance to the specifications and as specified on the plans. All miscellaneous patch and interconnect cables shall meet the proposed equipment specification requirements and shall meet EIA/TIA telecommunications standards.

835.05 – Testing

The Contractor shall provide the City of Norfolk a system acceptance test procedure and documentation form for execution by the Contractor under the supervision of a City of Norfolk Division of Transportation representative. The Contractor shall test each Ethernet switch at the intersection cabinet and corresponding intersection location to verify Ethernet connectivity on the network.

835.06 – Measurement and Payment

Furnish Layer 2 Ethernet Switch (Cisco IE-3000-8TC) will be measured in units of each (EA) and paid for at the contract unit price per each model. The price includes all materials, cables, labor, tools, equipment, and incidentals necessary to complete the work. All rack chassis, mounting brackets, mounting hardware (e.g., screws, nuts, bolts, etc.), power cords, transformers, jumper cables and connectors shall be included under this item. This price shall include factory and stand-alone testing, and system documentation including: shop drawings, manuals, wiring diagrams, block diagrams, flow charts, MIB's and other material necessary to document the installation details and operation of the units.

Install Layer 2 Ethernet Switch (Cisco IE-3000-8TC) will be measured in units of each (EA) and paid for at the contract unit price per each model. The price includes all materials, cables, labor, tools, equipment, and incidentals necessary to complete the work. All rack chassis, mounting brackets, mounting hardware (e.g., screws, nuts, bolts, etc.), power cords, transformers, jumper cables and connectors shall be included under this item. This price shall include factory and stand-alone testing, and system documentation including: shop drawings, manuals, wiring diagrams, block diagrams, flow charts, MIB's and other material necessary to document the installation details and operation of the units.

Furnish and Install Layer 2 Ethernet Switch (Cisco IE-3000-8TC) will be measured in units of each (EA) and paid for at the contract unit price per each model. The price includes all materials, cables, labor, tools, equipment, and incidentals necessary to complete the work. All rack chassis, mounting brackets, mounting hardware (e.g., screws, nuts, bolts, etc.), power cords, transformers, jumper cables and connectors shall be included under this item. This price shall include factory and stand-alone testing, and system documentation including: shop drawings, manuals, wiring diagrams, block diagrams, flow charts, MIB's and other material necessary to document the installation details and operation of the units.

End of Section

SECTION 860 - VIDEO SURVEILLANCE CAMERA SYSTEM (CCTV)

860.01 - Description

This work shall consist of furnishing, installing and testing a video surveillance system. The system shall include the CCTV camera, cables, surge protection, power supply, camera control receiver and all other accessories as needed to install a complete functioning CCTV system. The completed installation shall provide National Television System Committee (NTSC) video to the Smart Travel Center (STC) located at City Hall. This installation shall be in conjunction with the delivery of a Video Management System to be paid for and installed separately from this system. Installation and testing shall be in accordance with manufacturer's specifications and these special provisions.

860.02 - Materials

Provide a surveillance system that consists of a CCTV camera that has zoom capabilities, Pan and Tilt mechanism, camera control receiver, and all associated cables, power supplies, connectors, software, and documentation. The additional cost of integrating new software protocols into the existing surveillance system shall not be considered under this contract. An approved camera shall be capable of being integrated into the existing traffic control system without further development or integration of additional camera control drivers. The Smart Travel Center currently has drivers for COHU iDome cameras. An approved camera shall conform to the following specifications at a minimum.

A) General

1. The CCTV camera shall be of the dome variety designed to provide at least three individually configured simultaneous video streams at 30 frames per second (NTSC) or 25 frames per second (PAL) in all resolutions up to 704x480 pixels (NTSC) or 704x576 pixels (PAL) in Motion JPEG and H.264, and shall support a total of 20 simultaneous streams using unicast.
2. The CCTV camera shall be equipped with Day/Night functionality, provide high speed pan and tilt functions and be equipped with 35x optical and 12x digital zoom.
3. Operate on an open source; Linux-based platform, and including a built-in web server.
4. Be equipped with a slot for SD/SDHC memory card expansion.
5. Be manufactured with an all-metal body, support operation down to -40°C (-40°F) and be IP66-classified.
6. Utilize a separate power injector allowing the camera and heater/fan functions to be powered over the network cable.

B) Hardware

1. The camera shall:
   - Use a high quality IR-sensitive 1/4" progressive scan CCD sensor.

- Be equipped with an automatically and manually removable IR-cut filter, providing so-called day/night functionality.
- Be equipped with a high quality F1.4 – F4.2 DC-iris lens with 35x optical zoom providing a horizontal angle of view between 55.8° and 1.73°.
- Provide pictures down to 0.5 lux at F1.4 while in day mode (with IR-filter in use) and down to 0.008 lux while in night mode (with IR-filter removed).
- Be equipped with accurate high-speed pan-tilt functionality with 360° endless pan range and a 220° tilt range.
- Provide pan and tilt speed between 0.05° - 450°/sec.
- Support memory expansion by providing an available SD/SDHC card slot.

C) Video

1. RESOLUTION: The camera shall be able to deliver at least three individually configurable full resolution full frame rate video streams over IP networks.

Supported video resolutions shall include:

- 176x120 (NTSC) / 176x144 (PAL)
- 352x240 (NTSC) / 352x288 (PAL)
- 704x480 (NTSC) / 704x576 (PAL)

D) Encoding

1. The camera shall support Motion JPEG encoding in a selectable range from 1 up to 30 frames per second (NTSC) / 25 frames per second (PAL) in all resolutions
2. The camera shall support H.264 encoding in a selectable range from 1 up to 30 frames per second (NTSC) / 25 frames per second (PAL) in all resolutions
3. The camera shall be able to provide independently configured simultaneous H.264 and Motion JPEG streams
4. The camera shall support both Constant Bit Rate (CBR) and Variable Bit Rate (VBR) in H.264
5. The camera shall provide configurable compression levels
6. The camera shall support motion estimation in H.264

E) Transmission

1. The camera shall allow for video to be transported over:
   - HTTP (Unicast)
   - HTTPS (Unicast)
   - RTP (Unicast & Multicast)
   - RTP over RTSP (Unicast)
   - RTP over RTSP over HTTP (Unicast)
   - The camera shall support Quality of Service (QoS) to be able to prioritize traffic.
   - IMAGE CONTROL
   - The camera shall incorporate Automatic and Manual White Balance and an electronic shutter operating in the range 0.5 and 1/30.000 second for NTSC and 1.5 and 1/30.000 seconds for PAL.

- The camera shall provide Wide Dynamic Range, Electronic Image Stabilization and backlight compensation with automatic and definable exposure zones.

860.03 - Functionality

A) Web server

1. The camera shall contain a built-in web server making video and configuration available to multiple clients in a standard operating system and browser environment using HTTP, without the need for additional software.
2. Optional components downloaded from the camera for specific tasks, e.g. Active X, shall be signed by an organization providing digital trust services, such as VeriSign, Inc.

B) IP addresses

1. The camera shall support both fixed IP addresses and dynamically assigned IP addresses provided by a Dynamic Host Control Protocol (DHCP) server.
2. The camera shall allow for automatic detection of the Camera based on UPnP and Bonjour when using a PC with an operating system supporting this feature.
3. The camera shall provide support for both IPv4 and IPv6.

C) PTZ functionality

1. The camera shall provide at least 100 preset positions
2. The camera shall provide e-flip functionality, which will automatically rotate the image 180° electronically when following a moving object passing under the dome
3. The camera shall provide a guard tour functionality which allows the dome to automatically move between selected presets using an individual speed and viewing time for each preset
4. The camera shall be able to detect and automatically follow moving objects in the cameras field of view

D) Event functionality

1. The camera shall be equipped with an integrated event functionality, which can be trigged by:
   - Video Motion Detection
   - Auto Tracking
   - PTZ position
   - Schedule
   - Local storage full
   - Fan malfunction
   - Response to triggers shall include:
   - Notification, using TCP, SMTP or HTTP
   - Image upload, using FTP, SMTP or HTTP
   - Preset call up

- Guard Tour activation
- Recording to local storage

2. The camera shall provide at least 56 MB memory for pre & post alarm recordings.
3. Event functions shall be configurable via the web interface.

E) Protocol support

1. The camera shall incorporate support for at least IP, HTTP, HTTPS, SSL/TLS, TCP, ICMP, SNMPv1/v2c/v3 (MIB-II), RTSP, RTP, UDP, IGMP, RTCP, SMTP, FTP, DHCP, UPnP, ARP, DNS, DynDNS, SOCKS, NTP and Bonjour.
2. The SMTP implementation shall include support for SMTP authentication.

F) Text overlay

1. The Camera shall provide embedded on-screen text with support for date & time, and a customer-specific text, camera name, of at least 45 ASCII characters.
2. To ensure accuracy, the camera shall accept external time synchronization from an NTP (Network Time Protocol) server.
3. The Camera shall provide 8 individually configurable privacy masks to conceal defined areas in the image as non-viewable. These masks shall be dynamically adjusted based on current zoom-factor, and not be able to bypass.
4. The Camera shall allow for the overlay of a graphical image, such as a logotype, into the image.

G) Security

1. The camera shall support the use of HTTPS and SSL/TLS, providing the ability to upload signed certificates to encrypt and secure authentication and communication of both administration data and video streams.
2. The camera shall support IEEE 802.1X authentication.
3. The camera shall provide support for restricting access to pre-defined IP addresses only, so-called IP address filtering.
4. The camera shall restrict access to the built-in web server by usernames and passwords at three different levels.

H) API support

1. The camera shall be fully supported by an open and published API (Application Programmers Interface), which shall provide necessary information for integration of functionality into third party applications.

I) Installation and Maintenance

1. The camera shall be supplied with Windows-based management software, which allows the assignment of IP addresses, upgrade of firmware and backup of the Cameras' configuration.
2. The camera shall support the use of SNMP-based management tools according to SNMP v1, 2c & 3 / MIB-II.
3. The camera shall allow updates of the software (firmware) over the network, using FTP or HTTP.

4. All customer-specific settings shall be stored in a non-volatile memory and shall not be lost during power cuts or soft reset.

J) User logs

1. The camera shall provide a log file, containing information about the 250 latest connections and access attempts since the unit's latest restart. The file shall include information about the connecting IP addresses and the time of connecting.
2. The camera shall provide a connection list of all currently connected viewers. The file shall include information about connecting IP address, time of connecting and the type of stream accessed.

860.04 - Camera diagnostics

A) The camera shall:

- Be equipped with an LED, indicating the camera's functional status.
- Be monitored by a Watchdog functionality, which shall automatically re-initiate processes or restart the unit if a malfunction is detected.

860.05 – Camera Interfaces

A) Network interface

The camera shall be equipped with one 100BASE-TX Fast Ethernet-port, using a standard RJ-45 socket and shall support auto negotiation of network speed (100 MBit/s and 10 MBit/s) and transfer mode (full and half duplex).

860.06 – Camera Enclosure

A) The camera enclosure shall include the following:

- Manufactured with an all-metal body
- Clear transparent cover
- IP66-rating
- Four temperature sensors, two heaters and two fans inside the enclosure
- Removable sunshield

860.07 – Camera Power requirements

A) Power Details

An electrical service of 100-240 VAC / 50-60 Hz, max 60 W – shall be provided to the camera through the network cable by a separate injector, supplied with the camera.

THE POWER INJECTOR SHALL INCLUDE THE FOLLOWING:

Device Type	Power injector - external
Localization	United States

Power Device	
Input Voltage	AC 100-240 V
Frequency Required	50 - 60 Hz
Output Voltage	55 V
Output Connector(s)	RJ-45
Power Provided	30 Watt
Expansion / Connectivity	
Interfaces	1 x network - Ethernet 10Base-T/100Base-TX/1000Base-T - RJ-45
Miscellaneous	
Compliant Standards	Plug and Play, VCCI, cUL, EN 60950, GS, EN55024, EN55022 Class B, FCC Part 15 B, RoHS
Environmental Parameters	
Min Operating Temperature	32 °F
Max Operating Temperature	104 °F
Humidity Range Operating	0 - 90%

860.07 – Camera Communication/Power Cable

A) Cable:

The camera connection shall be wired using CAT5e outdoor rated bulk cable, installed aerial or in conduit, to provide the connectivity and power for communication from the camera to the traffic signal cabinet or CCTV cabinet. The CAT5e cable's communication/data conductors shall be connected to an approved surge suppression device. The CAT5e cable's power conductors shall be connected to an approved surge suppression device.

B) CAT5e Cable Communication/Data Surge Suppression

1. The communication/data conductors shall be connected to a surge suppressor device for protection. The surge suppressor's technology shall be based on the use of high energy Metal Oxide Varistors (MOVs) that are combined with a double network of ultra fast diodes and silicon avalanche diodes to form three distinct stages of protection. The device is required to support the following

   - Circuit Type – 3 Stage Series Hybrid
   - Lines Protected – Eight (8) per port
   - Connecter Type – RJ45 (Pins 1 – 8)
   - Surge Capacity – 1kA per wire
   - Clamp Voltage – 30V @0.5kA, 8/20µs
   - Rated Voltage – 5V
   - Max. Frequency – 155MHz
   - Attenuation – Better than -0.3dB at 100MHz

- Ambient Temperature - -40^0 F to +185 F (working): -40^0 C to +85 C (working)
- Humidity – 95% RH (non-condensing)
- N.E.X.T. – Worst pair, better than -43 dB at 100MHz
- Mounting – Capable of being mounted to a din-rail or flat surface

C) **CAT5e Cable Power Surge Suppression**

1. The power conductors shall be connected to a surge suppressor device for protection. The surge suppressor's technology shall be a hybrid type based on the use of high energy Metal Oxide Varistors (MOVs). The MOVs shall be monitored with a thermal sensitive device that disconnects the MOVs if a failure occurs. The suppressor will indicate a failure when the green LED goes out. The device is required to support the following

- Circuit Type –Hybrid
- Lines Protected – 3 (L, N, G)
- Cage Clamp – Terminal Strip
- Surge Capacity – 13kA 8/20 impulse
- Clamp Voltage – 395V @ 2kA 8/20
- MCOV – 125Vac, 175Vdc
- Max Load Current – 16 Amperes
- Mounting – Capable of being mounted to a din-rail or flat surface

860.08 – Environmental Requirements

- The camera shall operate in a temperature range of -40°C to +50°C (-40°F to +122°F).
- The camera shall operate in a humidity range of 20–80% RH (non-condensing).
- The camera shall be equipped with Arctic Temperature Control, allowing camera start-up at temperatures down to -40°C (-40°F).

860.09 – Installation

The Contractor shall install Closed Circuit Television (CCTV) Cameras as shown on the plans. The Contractor shall provide all necessary mounting and wiring to provide for a fully operational system.

Prior to installation of the CCTV, the contractor shall coordinate delivery of the device with the Project Inspector to the City's Smart Traffic Center for programing. The CCTV shall be delivered at least two weeks prior to the scheduled installation of the device.

The Contractor shall demonstrate the functionality of the provided CCTV system with the digital video system at the Smart Traffic Center for seamless control functionality and operation.

The CCTV shall be capable of delivering high-quality color video transmitted over the fiber optic Ethernet communications network.

860.09 – Measurement and Payment

Method of Measurement – The Video Surveillance System (CCTV) will be measured in units of each (EA) and the Video Surveillance System Conductor Cable Assembly will be measured in units of each (EA).

Basis of Payment - The contract unit price of each per system shall be based on the following work tasks.

Install Video Surveillance System (CCTV) - The unit price to install a Video Surveillance System includes all labor, tools, equipment, and incidentals necessary to complete the work. All camera mounting brackets, mounting hardware (e.g., screws, nuts, bolts, etc.), power cords, transformers, jumper cables and connectors shall be provided by DOT. This price shall include factory and stand-alone testing. The contractor shall submit an acceptance test procedure recommended by the manufacturer for approval by the Engineer.

Furnish and Install Video Surveillance System (CCTV) - The unit price to furnish and Install a Video Surveillance System includes all materials, labor, tools, equipment, and incidentals necessary to complete the work. All camera mounting brackets, mounting hardware (e.g., screws, nuts, bolts, etc.), power cords, transformers, jumper cables and connectors shall be included under this item. This price shall include factory and stand-alone testing, and system documentation including: shop drawings, manuals, wiring diagrams, block diagrams, flow charts, MIB's and other material necessary to document the operation of the units. The contractor shall submit an acceptance test procedure recommended by the manufacturer for approval by the Engineer.

Furnish and Install Video Surveillance System Conductor Cable Assembly – The unit price to Furnish and Install Video Surveillance System Conductor Cable Assembly between the CCTV camera and the controller cabinet will be measured in units of each per given length and paid for at the contract unit price per each. Cable lengths shall be 100 foot, 200 foot, and 300 foot. This price shall include the requirements for power and communication/data surge suppression devices. This price shall include all materials, labor, tools, equipment, and incidentals necessary to complete the work.

End of Section

SECTION 870 - VIDEO OPTICAL MULTIPLEXER (VMUX-TR)

870.01 - Description

This work shall consist of furnishing, installing and testing a video optical multiplexer combination that consists of a transmitter and a receiver pair. This equipment will multiplex up to four NTSC format videos with bi-directional EIA-232/422 data channels and will support the City of Norfolk's Network Management System (NMS). The installation shall include all cables, surge protection, and other accessories as needed in accordance with these specifications and as directed by the Engineer. The VMUX transmitter (VMUX-T) and VMUX receiver (VMUX-R) are used as a pair to connect multiple surveillance cameras to the Norfolk Smart Traffic Center via a fiber-optic link.

870.02 - Materials

Provide VMUXs that consist of a pair of electronic units (transmitter and receiver) that will interface with the existing system platform without further development of any control drivers or integration of any additional hardware or software. The video optical multiplexer approved by the City of Norfolk is the four-channel VILINK, ML4D or approved equivalent. The multiplexer combination shall meet the following minimum specifications:

- Four channel multiplexer pair (transmitter and receiver)
- NTSC color video communications with EIA-232/422 control data communications
- EIA-250C medium haul standards

870.03 – Installation

Mount the VMUX-T (transmitter) on a controller cabinet shelf or in an existing controller cabinet equipment rack (rack mounted using manufacturer provided brackets). Secure the power converter (if stand-alone) along with the VMUX-T (transmitter) in the controller cabinet from which CCTV video and data will be transmitted back to the Smart Traffic Center (STC) or to an intermediary location where the video and data will be multiplexed with additional video and data feeds back to the STC. Secure and neatly stow all cables and power converter(s) in the cabinet with appropriate cable ties and strain relief. Provide a minimum of three feet of slack for each cable. Annotate all electrical cables with the correct connection information and function.

Where installed at intermediary locations in the field the VMUX-R (receiver) shall be labeled with information about the CCTV Video source location. The contractor shall provide all cables, as recommended by the manufacturer, from the VMUX-R (receiver) to the existing VMUX-T (transmitter), where its signal will be combined with other video and data feeds for transmission to the STC. Secure and neatly stow all cables and power converter(s) in the cabinet with appropriate cable ties and strain relief. Provide a minimum of three feet of slack for each cable. Annotate all electrical cables with the correct connection information and function.

Where installed at the Smart Travel Center (STC) the VMUX-R (receiver) shall be rack mounted and secured as specified by the manufacturer. The VMUX-R (receiver) shall be labeled with information about the CCTV Video source location(s). Secure and neatly stow all cables and power converter in the equipment racks with appropriate cable ties and strain relief. Provide a minimum of three feet of slack for each cable. Annotate all electrical cables with the correct connection information and function.

870.04 – Testing

Video Optical Multiplexer Combination pairs (VMUX-T and VMUX-R) shall be tested in accordance with manufacturer's specifications and these special provisions. The contractor shall submit to the City of Norfolk a test procedure recommended by the manufacturer to be executed by the contractor as part of any final acceptance of the installation.

870.05 – Measurement and Payment

Furnish and Install Video Optical Multiplexer Combination Pair (VMUX-T and VMUX-R) will be measured in units of each (EA) and paid for at the contract unit price per each. The price includes all materials, cables, labor, tools, equipment, and incidentals necessary to complete the work. All rack, chassis, mounting brackets, mounting hardware (e.g., screws, nuts, bolts, etc.), power cords, transformers, coaxial cables, jumper cables and connectors shall be included under this item. This price shall include factory and stand-alone testing, and system documentation including: shop drawings, manuals, wiring diagrams, block diagrams, flow charts, MIB's and other material necessary to document the operation of the units.

End of Section

SECTION 875 – SCHOOL ZONE FLASHING BEACON ASSEMBLY

875.01 - Description

This work consists of furnishing and installing mast arm or pedestal pole mounted school zone caution light assemblies, in accordance with the contract documents. Each assembly shall include cabinet with programmable solid state time switch, wiring from the cabinet to the warning beacons, 12" LED warning beacons, indicator beacon and wiring, school speed limit sign, mounting hardware and all incidental fittings necessary for the operation of the unit during the prescribed time periods.

875.02 – Materials and Installation

1. General: The school zone caution light assembly shall operate to alternately flash two 12" LED warning beacons during student arrival and departure periods on days when school is in session. Work shall be performed in accordance with the requirements of the NEC and the standards of Dominion Virginia Power. The assembly and its individual components shall be designed, constructed and assembled to withstand 110 mph wind loading in accordance with current AASHTO design criteria.

2. Sign: School Speed Limit sign and Pedestrian Crossing sign shall conform to Section 701 and to Appendix E.

3. Warning Beacons: shall be 12" cast aluminum traffic signal sections with amber LED lenses. The section shall be mounted to the sign in such a manner as to allow maintenance personnel to access without difficulty, the interior of each housing to replace a lamp and clean the lens and shall conform to Section 708.

4. Cabinet and Interior Wiring: shall be fabricated of 0.125 inch thick sheet aluminum. All exterior seams shall be continuously welded. Cabinet mounting attachments shall be durable, corrosion resistant and of heavy duty construction. The cabinet door shall provide full access to the cabinet interior and shall be gasketed to assure weatherproofing. The cabinet door shall include a standard police lock. Two keys shall be furnished. The cabinet door hinge and hinge pin shall be stainless steel. The nominal outside dimensions of the cabinet shall be 14" H x 14" W x 7" D. The cabinet shall have a natural aluminum finish. All conduit bodies or other cable entry fittings shall be attached to the bottom of the cabinet. Entry through the sides, back or top will not be permitted.

   The cabinet shall be furnished with the components specified below and wired in accordance with the current applicable sections of NEMA Publication TS-1 and its revisions. All components shall be mounted on a removable panel. The removable panel shall be fastened to a minimum of four (4) standoffs mounted on the back wall of the cabinet.

The cabinet shall include a plug-in dual circuit NEMA flasher and base. The flasher shall be solid state construction and shall have a 15 Amp rating over a temperature range of -34 degrees C to +74 degrees C, with a LED indicator for each circuit. The flasher circuit shall include a power transfer relay. The coil side of the relay shall be wired to the output of the activation switch. **The activation switch will be provided by the City**.

The contacts of the relay shall apply power to the NEMA flasher. The power relay shall have contacts rated to 30 Amps.

The cabinet shall include lightning and surge protection. The protection shall consist of a medium duty AC service arrestor to protect the time switch and associated equipment from harmful voltage surges caused by lightning or the power company. The arrestor shall be installed using studs and shall be easily replaceable from the front of the cabinet assembly with the use of simple hand tools. The arrestor shall conform to the following requirements:

a. Repetitive Peak Surge Current – 15000 Amps
b. Peak Surge Voltage (at 10KA) – 680 Volts
c. Energy Handling – 220 Joules
d. Power Dissipation Rate – 15 Watts max
e. Continuous AC Voltage – 50 VAC RMS
f. Peak Voltage (IMA) – 212 Volts
g. Typical Capacitance – 400 Picofarads
h. Operation Temperature – -40 degrees C to +85 degrees C

A fifteen (15) Amp circuit breaker shall be furnished for the incoming AC + line.

Barrier type terminal blocks shall be installed to terminate all wire connections. The terminal blocks shall have a minimum of eight (8) positions to terminate the following functions:

a. Normally open contact of the time clock relay
b. Common Contact of the time clock relay
c. Normally closed contact of the time clock relay
d. Neutral for load – 1
e. Neutral for load – 2
f. Load – 1 from the flasher
g. Load – 2 from the flasher
h. AC-

All of the above functions shall be clearly marked on the panel adjacent to the terminal block by either etching or a silk screen process.

Field wiring shall be accommodated by a copper connector cable of terminating wire sizes ranging from #6 to #14 AWG.

A ground fault convenience receptacle shall be mounted in a readily accessible location within the cabinet. It shall be wired to the load side of the 15 Amp circuit breaker.

Radio frequency interference filter rated at 50 Amps.

A listing indicating all terminal numbers with a description of its use shall be attached to the inside of the cabinet door and overlaid with a clear, plastic covering. All edges of the plastic shall extend one inch beyond the listing and be sealed with a clear weatherproofing compound. Two prints of a complete cabinet circuitry diagram shall be furnished.

5. Electrical Wiring: The control equipment, indicator beacon and warning beacons shall all operate from a single phase two wire 120VAC power source.

   Wiring between the cabinet and the warning beacons shall be continuous and terminations made on terminal blocks. Splices will not be permitted. Wiring to the indicator beacon may be spliced, provided that such splicing is accomplished in accordance with the NEC and is readily accessible for inspection and maintenance.

6. Indicator Beacon: shall be installed on the mast arm on the side opposite the sign face. The indicator beacon shall be wired to one of the beacon circuits to give a flashing indication in operation. This indication shall be visible, under normal conditions, to police, maintenance personnel and school crossing guards for a minimum distance of 500 feet. The indicator beacon shall be furnished with a 90 Watt energy saver type incandescent traffic signal lamp and include a clear protective lens over the lamp.

7. Wireless Interconnect: Control equipment requirements:

   a. ENCOM™ Model COMMPAK™ I/O 8 Spread Spectrum Radio System or equal, for on shelf in traffic cabinet, consisting of:

      i. Shelf mount transceiver with contact closure
      ii. High Gain YAGI antenna
      iii. Antenna bracket
      iv. Antenna surge suppressor with jumper cable (jumper cable to be 6 feet RG-58 with TNC to NM connectors)
      v. Power receptacle
      vi. Antenna coaxial cable

      When an OMNI directional antenna is required, the following shall apply:

      i. ENCOM Antenna cable power splitter with 2 each 6’ cables
      ii. ENCOM 6dB gain OMNI antenna with mounting kit

   b. ENCOM™ Model COMMPAK™ I/O 8 Spread Spectrum Radio System or equal, for self-contained pole mounting, consisting of:

i. Self-contained pole mount transceiver system with contact closure
ii. High Gain YAGI antenna
iii. Antenna surge suppressor
iv. Pole-mount cabinet
v. Circuit breaker
vi. AC surge suppressor

875.03 – Measurement and Payment

1. **Pedestrian Crossing Flashing Beacon Mast Arm Assembly** will be measured in units of Each (EA) for each type of mast arm assembly and paid for at the contract unit price per each. This price shall include cabinets with flashers, flasher relay assemblies, radio frequency interference filters, circuit breakers, lightning and surge protection, terminal blocks, ground fault convenience receptacle, pedestrian crossing sign, warning beacons, indicator beacon, conductors and wiring connections between the cabinet and the warning beacons and the indicator beacon, wireless interconnect (if required), and all hardware, fittings, tools, labor and equipment for mounting and testing. Mast arm pole and pole foundation paid for separately.

2. **School Zone Flashing Beacon Mast Arm Assembly** will be measured in units of Each (EA) for each type of mast arm assembly and paid for at the contract unit price per each. This price shall include cabinets with flashers, flasher relay assemblies, radio frequency interference filters, circuit breakers, lightning and surge protection, terminal blocks, ground fault convenience receptacle, school speed limit sign, warning beacons, indicator beacon, conductors and wiring connections between the cabinet and the warning beacons and the indicator beacon, wireless interconnect (if required), and all hardware, fittings, tools, labor and equipment for mounting and testing. Mast arm pole and pole foundation paid for separately.

3. **School Zone Flashing Beacon Pedestal Assembly** will be measured in units of Each (EA) for each type of pedestal assembly and paid for at the contract unit price per each. This price shall include cabinets with flashers, flasher relay assemblies, radio frequency interference filters, circuit breakers, lightning and surge protection, terminal blocks, ground fault convenience receptacle, school speed limit sign, warning beacons, indicator beacon, conductors and wiring connections between the cabinet and the warning beacons and the indicator beacon, wireless interconnect (if required), and all hardware, fittings, tools, labor and equipment for mounting and testing. Pedestal pole and pole foundation paid for separately.

4. **School Zone Flashing Beacon Wood Pole Assembly** will be measured in units of Each (EA) and paid for at the contract unit price per each. This price shall include cabinets with flashers, flasher relay assemblies, radio frequency interference filters, circuit breakers, lightning and surge protection, terminal blocks, ground fault convenience receptacle, school speed limit sign, warning beacons, indicator beacon, conductors and wiring connections between the cabinet and the warning beacons and the indicator beacon, and all hardware, fittings, tools, labor and equipment for mounting and testing.

SECTION 880 – COUNT-DOWN PEDESTRIAN SIGNAL HEAD (Ped Head)

880.01 – Description

This work shall consist of furnishing, installing and testing a count-down type LED pedestrian signal head assembly. An approved pedestrian head unit shall conform to VDOT standard SP-9 consisting of two 12” top and bottom message bearing surfaces (2- mbs) and VDOT standard SP-8 consisting of side by side message bearing surfaces (2-mbs). For SP-8, the left message bearing surface shall provide the Portland orange LED indication of a hand (filled-in) as well as the white LED indication of man (filled-in). For SP-8, the right message bearing surface shall provide the countdown indication. For SP-9, the upper message bearing surface shall provide the Portland orange LED indication of a hand (filled-in) as well as the white LED indication of man (filled-in). For SP-9, the lower message bearing surface shall provide the countdown indication.

880.02 – Materials

The approved housing unit shall conform to VDOT standard SP-9 consisting of two 12” top and bottom message bearing surfaces. The approved housing unit shall conform to VDOT standard SP-8 consisting of single 18” x 16” signal head. The approved LED walk/don’t walk and countdown indicators shall install into the housing in place of the incandescent fixtures and shall wire directly into the terminal blocks provided. The indicators shall include all necessary hardware and firmware to directly replace the incandescent fixtures normally provided in these housings.

The pedestrian signal head housing for SP-9 shall be 12 inch square incandescent aluminum pedestrian signals. The pedestrian signal head housings for SP-8 shall be 18” x 16” incandescent aluminum pedestrian signals.

The Solar Screen visor is inserted through the back side of the door. The visor overlaps the door by 1/2 inch and is sealed when the door is closed to prevent light from escaping between the visor and the door.

The pedestrian signal indications shall be manufactured by TASSIMCO or an approved equivalent.

All exposed fittings, screws and fasteners shall be stainless steel. All interior screws, fasteners and metal parts shall be stainless steel or non-corrodible metal.

The exterior finish shall be painted Federal Black in color or as specified on plans.

880.03 – Installation

Pedestrian Signals shall be installed in accordance with these specifications and according to manufactures recommendations and the details shown in the Contract Drawings, these Specifications, or as ordered by the Engineer.

880.04 – Measurement and Payment

Method of Measurement – Count-down pedestrian signal assembly will be measured in units of Each (EA) for the lens size, number of sections and per number of directions per assembly.

Basis of Payment - The contract unit price per assembly shall be based on the following work tasks.

A. **Install**: The unit price for an installed count-down pedestrian signal assembly shall consist of all tools, equipment, hardware as required in Section 706, labor and incidentals necessary to wire a pedestrian signal assembly for a complete and accepted installation, in accordance with Section 880 of this specification.

B. **Furnish and Install**: The unit price to furnish and install a count-down pedestrian signal assembly shall consist of a traffic signal head that conforms to Section 880 of this specification, all hardware as required in Section 706, tools, equipment, labor and incidentals necessary for a complete and accepted installation in accordance with Section 880 of this specification. This price shall include factory and stand-alone testing, and system documentation including: manuals, wiring diagrams, and other material necessary to document the operation of the units.

End of Section

SECTION 885 – TEST PITS

885.01 - Description

This item will consist of performing test pits within the project for the purpose of locating underground utilities prior to excavation. Prior to any test pit operation, the Contractor is to review the location, number of test pits and the existing utilities with the Owner. The contractor shall obtain the vertical and horizontal location, measured off of the construction center line or base line, and determine the size of the utility line being test pitted. Test pits performed without prior authorization from the Owner will be at the Contractor's expense.

885.02 - Materials

Materials for backfill and pavement replacement shall meet applicable provision of these supplemental specifications and the 2007 VDOT Road and Bridge Specifications.

885.03 - Method of Measurement

Test Pits will be measured in units of Each (EA).

885.04 - Method of Payment

Test Pits will be paid for at the contract bid price of each. Such price will be full compensation for all tools, labor, materials, survey equipment and incidentals necessary to complete the work.

End of Section

SECTION 890– NORFOLK BATTERY BACKUP ASSEMBLY

890.01 - System Description

The supplier shall provide and install a microprocessor-controlled software driven UPS power system. The primary purpose of the system will be to provide emergency power for the traffic control system and associated equipment in the event of a utility power failure for a minimum of 4 hours, unless noted otherwise or when utility power is outside of the programmable voltage and frequency range of the UPS system. The UPS is equipped with a programmable front panel display to allow for both full programming and monitoring of the UPS via a back lighted LCD display. An additional LCD annunciates the status of real time events occurring in the system. The UPS system shall be capable of full remote access, control and monitoring via RS232 serial interface, USB, and web-based Ethernet access. A Power Management Module/Automatic Transfer Switch (PMM/ATS) is integral to the UPS system to switch between utility power and battery power when required.

Fully compatible with incandescent and LED traffic signal control equipment, pedestrian signals, and camera systems. Compatible with all police panel functions.

Environmental operation: from -40°C (-40°F) to +74°C (165°F) and certified.

This work shall consist of furnishing and installing traffic signal equipment in accordance with these specifications and as shown on the plans or as directed by the Engineer.

890.02 - Equipment

All equipment and materials provided must be included in the City of Norfolk DOT's Approved Equipment list or be an approved equal.

A. Type Battery Backup Assembly:

The purpose of this specification is to describe the minimum acceptable design and operating requirements for a traffic control battery backup assembly. These special provisions define the work and materials necessary to provide traffic control battery backup equipment for the City of Norfolk. Each Traffic Controller Assembly to be furnished shall consist of all necessary quantities from the following items to fulfill, or as specified per bid document:

1. UPS Module
2. Power Management Module/Automatic Transfer Switch (PMM/ATS)
3. Battery Bank
4. Batteries
5. Battery Backup Cabinets

To assure full and complete utilization of all equipment furnished, the Contractor/Manufacturer shall provide support services and materials, which shall include,

but not be limited to, furnishing complete equipment documentation, warranties, and training.

B. Enclosed Equipment:

Related Specifications and Standards

All equipment furnished shall be new and shall conform to the plans, Special Provisions, Specifications, and to the applicable requirements of the Underwriter's Laboratory Incorporated (UL), the Electronics Industries Association (EIA), the National Electric Code (NEC), the American Society for Testing and Materials (ASTM), the American National Standards Institute (ANSI), and the applicable standards, specifications, and regulations of the City of Norfolk.

1. UPS Module

2000W solid-state uninterruptible power supply fully programmable at the front panel, UPS Module Features:

a. True sine wave inverter utilizing high frequency IGBT technology

b. Provides regulated voltage for any power factor load from 0 to 1, capacitive, inductive or non-Linear and handles non-symmetrical loads.

c. UPS input voltage switch-over thresholds adjustable from 85 VAC to 135 VAC and 40 to 70 Hz.

d. Power transfers in 16 milliseconds or less (seamless transfer), from utility power to battery supplied power.

e. UPS Module synchronized to utility power before switching from battery supplied power back to utility power.

f. Event Status LCD: Displays total events recorded, total time on batter, and real-time alarms.

g. P.C. compatible to program flashing mode time delay and to monitor and record system events and status.

h. Connections available to wire remote event monitoring and operation of the UPS system.

i. Programmable advanced charger accommodates various battery types and capacities with up to 3-step charging capability, and charging can be completed in ten hours starting with completely exhausted batteries.

j. Advanced charger minimized input power while charging batteries and proportions charging current based on the sensed traffic signal load; if necessary, priority is given to the traffic signal controller.

k. Utilized advanced heat sink design with smart cooling to minimize cooling fan use and to extend fan life.

2. Power Management Module/Automatic Transfer Switch (PMM/ATS)

a. Contains a series mode design TVSS (Transient Voltage Surge Suppressor) with a non-degrading surge reactor.
  1) TVSS does not shunt current to the ground plane.
  2) TVSS provides conditioned power to UPS power system and the entire traffic control system including, wiring and associated electronics,

b. Equipped with a wrap around maintenance bypass switch to enable removal and replacement of the UPS Module without shutting down the traffic control equipment.

c. Can be programmed to switch from auxiliary generator operation to utility power upon return of normal utility power.

3. Battery Bank

The Battery Bank will be comprised of the Batteries and connection components as described herein. Each Battery Bank will contain four (4) batteries.

a. Batteries are parallel connected providing redundancy should any battery fail and to insure that each battery is equally charged.

b. All battery connections are bolted utilizing stainless steel hardware.

c. Battery cables to connect the batteries in parallel are to be constructed of a flexible 1/0 AWG copper-tin stranded conductor and have terminals that are copper-tin alloy which are factory-crimped and include an insulation cover over the copper core to help provide protection from physical contact and severe conditions.

d. Battery cables to connect the batteries in parallel are to be either 15” or 18” in length as required for physical field conditions or as directed by the Engineer.

e. Battery cables (Battery Hook-up Cable) to connect the battery-bank to the Power Management Module and UPS Module must be 60” long and are to be equipped with Anderson type lug connectors compatible with the receiving end.

f. System can be equipped with Valve regulated, Absorbed Glass Mat (AGM) or Gel cell battery as described in Section 890.02.B.4.

g. System is capable of utilizing any approved “off the shelf” domestic battery.

4. Battery

a. Each individual battery shall be equipped with a high strength outer steel jacket to aid in battery longevity.

b. Battery shall be a 12V; 71Ah, or 101Ah battery, as directed by the Engineer or identified in Project Plans

c. Battery shall be Absorbed Glass Mat (AGM) Valve Regulated, Lead Acid design
d. Battery shall be UL Approved
e. Battery shall be DOT Approved as non hazardous cargo for ground, sea and air transportation. DOT 49CFRI 73.159 (d), I and H
f. Battery Case and Cover shall be manufactured of flame retardant material and meet UL94 VO Standards
g. Battery shall have high cycle capability in excess of 500 cycles to 80% depth of discharge and be compliant with Telcordia ST 4228
h. In compliance with ITC Standard for environmental exposure (negative 40 degrees Celsius to 74 degrees Celsius) the battery shall be fitted with a steel outer jacket for temperature exposures above 55 degrees Celsius
i. At time of shipment the battery shall be tagged with the open cell voltage (OCV) and conductance measured in Siemens
j. Minimum acceptable open cell voltage at time of shipment is 12.85 volts with a maximum voltage deviation between + 0.03 volts
k. The conductance deviation measured at time of shipment can be no greater than + 6% of the mean value
l. At time of shipment, a report will be included certifying voltage and conductance of each individual battery, which is identified by a serial number. In addition, each shipment will contain two (2) copies of the manufacture's Material Safety Data Sheet.

5. Battery Backup Cabinets

The battery backup system (BBS) cabinet is used for housing batteries and / or BBS, which includes UPS module, Power Management Module/Automatic Transfer Switch, any other control panels, and all wiring and harnesses.

All “Caltrans” style stand-alone battery backup cabinets are to include the appropriate 19” rack cage, cabinet shell, built-in transfer switch as specified and the features detailed below:

A) Cabinet Shell, Model 336S

1) Cabinet Finish:

a) TYPE A - The cabinet shall have a standard aluminum finish if not specified on plans or special provisions.

b) TYPE B - Painted finishes shall conform to the requirements as specified in the contract plans and specifications according to the following:

- All components, nuts, bolts, screws shall have shop painted finish coat.
- The color shall be City of Norfolk "Federal Green", Federal Standard Color No. 14062, and Federal Standard 595B.

- The finish coating shall be a six stage chemical treatment for an electrostatic applied fusion bonded polyester powder coating. The polyester protective coating shall be one coat, minimum 4 mils thick, and heat curable, thermosetting powdered coating.

- The polyester coating shall be checked for continuity using 67-1/2 volt wet sponge detector to check for holidays, pinholes and discontinuities. Coating shall be checked and certified.

2) Cabinet Door Locks and Lifting Rings:

a) The cabinet shall have door locks (Corbin Norfolk B4R97849 lock).
b) Lifting eyes attached to the side of cabinet

3) Cabinet Light:

Equivalent to LEOTEK – LED Traffic Cabinet Light CL Series. Each cabinet shall include two (2) LED lighting fixture (one front, one back) mounted horizontally inside the top portion of the cabinet. The fixtures shall include a bright white LED, lamp cover and shall be operated by a normal power factor UL listed ballast. A door-actuated switch shall be installed to turn on the applicable cabinet light when the front door or back door is opened.

4) AC Service Input Terminal

Each controller cabinet shall be provided with a main service block terminal. The terminal shall be installed between the pole mounted service disconnect panel and the cabinet breaker. The terminal shall be mounted on the bottom right hand side of the cabinet. Approximately 5" left of main service block and centered between the bottom of the input file and the bottom of the rack chassis. The terminal shall be used to connect the following:

5) 120 VAC Receptacles

i) Power Strip (non-GCFI)
Each controller cabinet shall be provided with a power strip consisting of eight (8) 15A-125V; 2-Pole, 3-Wire receptacles. The power strip shall be mounted so not to interfere with drop down back panels or other components. The strip can be mounted (bolted or with mounting screws) either on the left or right of the rear of the cabinet where it will not interfere with existing terminal blocks. The power strip shall be wired directly, un-fused, from the AC service input terminal block.

ii) GCFI Protected Receptacle
A two outlet GCFI receptacle shall be mounted within the cabinet.

6) Fans w/ Thermostatic Control

Two (2) electric fans shall be equipped with ball or roller bearings and with a capacity of at least 100 cubic feet of free air delivery per minute. The fans shall be mounted within the housing and vented. (7.2.7.2. TEES)

7) AC Breaker/Switch

The cabinet shall be provided with a main circuit breaker to provide protection equipment and all accessories thereof. The Ampacity rating of this breaker shall be sized in accordance with the total load which will result from the equipment called for in these special provisions and the plans. A separate, 15-ampere circuit breaker shall be provided for AC power to the cabinet light and convenience (GFCI) outlet. This breaker shall be wired parallel to the main breaker.

8) Shelves

The cabinet shall be provided with three adjustable-height shelves. Each shelf shall be capable of supporting 250 pounds. The adjustable mounting for the shelves shall enable the shelves to be removed and/or adjusted to any position within the cabinet.

9) Generator Plug

The cabinet shall be provided with one “Hubbell” type generator plug mounted to the right side of the cabinet that is wired directly into the transfer switch.

10) Fiber Optic Interconnect Center

See Section 711. Note: When Battery Back-up System (BBS) cabinet is installed with a new controller cabinet assembly, the fiber optic interconnect center shall be housed in the BBS.

11) Ethernet Switch

See Section 835. Note: When Battery Back-up System (BBS) cabinet is installed with a new controller cabinet assembly, the Ethernet Switch shall be housed in the BBS.

12) DIN Rail

Din rail shall be furnished to provide mounting of the Ethernet Switch. The rail shall be mounted to the upper right side (facing from the rear door) of the cabinet onto the side panel mounted to the frame. The rail shall be mounted so that the Ethernet Switch does not interfere with any cable connections.

B) Cabinet Shell, Model 332

1) Cabinet Finish: same as Model 336S Cabinet

2) Cabinet Door Locks and Lifting Rings: same as Model 336S Cabinet

3) Cabinet Light: same as Model 336S Cabinet

4) AC Service Input Terminal: same as Model 336S Cabinet

5) 120 VAC Receptacles: same as Model 336S Cabinet

6) Fans w/ Thermostatic Control: same as Model 336S Cabinet

7) AC Breaker/Switch: same as Model 336S Cabinet

8) Shelves: Five (5) shelves capable of supporting 250 pounds shall be mounted upon the provided 19" rack.

9) Generator Plug: same as Model 336S Cabinet

10) Fiber Optic Interconnect Center: same as Model 336S Cabinet

11) Ethernet Switch: same as Model 336S Cabinet

12) DIN Rail: same as Model 336S Cabinet

890.03 - Documentation

Each cabinet drawing shall include the following additional information. The City Division of Transportation shall also be provided with AUTOCAD 2000 drawings file on electronic media.

890.04 - Testing

Prior to installation and intersection cut-on, the equipment will be fully tested using industry standard testing and diagnostic software. The Contractor shall coordinate with the Division of Transportation project representative to schedule the testing. Any equipment that fails these tests will not be approved for installation by the contractor. The following equipment shall be subject to testing:

890.05 - Statement of Warranty and Compliance

A. In these specifications, whenever a specific design or construction has been specified, it is intended to establish a standard of performance, and any design or construction giving strictly equivalent performance may be considered, provided that the vendor brings such exceptions to the attention of the Traffic Engineer in writing, at the time of bid submittal.

B. Each vendor shall include in his proposal all warrants and/or guarantees with respect to materials, parts, workmanship, or performance which are included for equipment covered by this specification.

C. The vendor shall ship only complete controller/cabinet assemblies with complete documentation included. Substandard controller/cabinet assemblies will not be accepted and will be returned to the vendor after the Contractor has notified the vendor both by telephone and by letter.

Within seven (7) days after the vendor first receives notice of rejection of a shipment, the vendor shall remove the shipment, the Contractor will forward the shipment to the vendor by common carrier at the vendor's expense and risk.

890.06 - Warranty

A. The entire UPS system and batteries shall be warranted for a term of two (2) years for parts and labor. Warranty period to begin upon official date of acceptance of work.

B. Each cabinet and controller component shall have a 90-day field burn-in period after the approved testing has been completed.

1. Any controller or controller component failing to meet the specifications or which has repeated malfunctions within 90 days of installation shall be subject to replacement of the defective unit or complete controller at no cost to the City (or to refund of the purchase price of the controller, at the discretion of the City).
2. The full two-year warranty shall be applicable on all replacement UPS and PMM modules. Continued failure and repeated malfunctions of any module/equipment shall be cause to remove that module/equipment from the list of acceptable modules/equipment for future purchasing.

890.07 - Training

The bidder shall provide with each model or series of new models the following training items with the bid.

A. In-house Training

1. "In-House Training" shall consist of three (3) eight (8) hour days, twenty-four (24) hours, of training and instructions, by factory certified personnel, to include but not limited to the following:
2. Training shall take place within thirty (30) days following delivery and acceptance of the products by the City of Norfolk.
3. The training shall take place at City facilities.
4. All training manuals and documentation shall be furnished for a minimum of eight (8) traffic engineering personnel.
5. The instructor shall schedule the training seminar with the Traffic Engineer fourteen days (14) in advance.

B. Factory Training

1. "Factory Training" shall consist of twenty four (24) hours of training by qualified management, engineering and production staff of the manufacturer, to include but not limited to the following:

a. Training shall take place within two (2) months following delivery and acceptance of the products by the City of Norfolk.

b. Training for four (4) traffic engineering personnel shall take place at the manufacturer's facility.

c. Training shall be scheduled at least two (2) months in advance with the Traffic Signal Engineer.

d. The manufacturer shall provide travel expenses for four (4) traffic engineering personnel,

1) Including coach class airfare (if greater than 250 mile radius of Norfolk, Virginia),
2) Lodging (Single occupancy)
3) Meals (Minimum per diem $40.00/day)
4) Ground transportation.

890.08 - Packaging and Shipping

A. All equipment shall be clearly marked with the intersection location, City of Norfolk Service Request# and/or Contract on all packaging.

B. Responsibility for damage to equipment during shipment shall be that of the shipper and supplier. All adjustment for damages to equipment will be the responsibility of the supplier/shipper and the transfer company. All shipping costs shall be the responsibility of the successful bidder.

C. The City of Norfolk will not be responsible for settlement of damages. Packages which appear to be damaged on delivery will be set aside and inspected by a representative of the manufacturer.

890.09 - Installation

Cabinets:

1. The controller assembly shall be securely bolted to a prepared foundation of specified size (See Details of Cabinet foundation). The bolt pattern shall match the bolt pattern of the cabinet.

2. The front door of the battery backup cabinet (in the case of stand-alone cabinets) shall open in the direction which will permit maintenance personnel to view the intersection.

2. The complete assembly shall be effectively weatherproof.

3. A separate 1 ½" conduit shall be installed between controller cabinet foundation and BBS foundation for ruggedized fiber optic jumpers and/or ruggedized Ethernet cables..

4. Each assembly shall be effectively grounded using a #8 copper wire attached to the cabinet by a stainless steel bolt and to the ground rod by a square head clamp.

5. Grouting around the base foundation shall be with "no-shrink" grout.

6. Installation procedure in all cases shall be those as recommended by National Electrical Code.

890.10 - Measurement and Payment

Battery Backup Assembly:

A. Method of Measurement: The unit price for a Battery Backup Assembly shall be measured in units of Each (EA) as the specified work task indicates on the plans.

B. Basis of Payment: The unit price for a Battery Backup Assembly shall be based on the following work tasks.

1. Furnish: The unit price for furnishing a Battery Backup Assembly shall include the UPS Module, Power Management Module/Automatic Transfer Switch (PMM/ATS), Battery Bank and Batteries for the requested cabinet type outfitted as specified herein, incidental fittings necessary to mount the controller cabinet, and training of personnel (if applicable) will be considered full compensation of this work task.

2. Install: The unit price for installing a Battery Backup Assembly shall include tools, equipment, labor and incidentals necessary to install a complete and accepted installation in accordance with Section 890. This shall be full compensation of this work task.

3. Furnish and Install: The unit price for furnishing and installing a Battery Backup Assembly shall include the UPS Module, Power Management Module/Automatic Transfer Switch (PMM/ATS), Battery Bank and Batteries for the requested cabinet type outfitted as specified herein, tools, equipment, labor, incidental fittings necessary to mount the controller cabinet, and training of personnel (if applicable) will be considered full compensation of this work task.

Cabinet Shell:

A. Method of Measurement: The unit price for a Cabinet Shell shall be measured in units of Each (EA) as the specified work task indicates on the plans.

B. Basis of Payment: The unit price for a Cabinet Shell shall be based on the following work tasks.

1. Furnish: The unit price for furnishing a Cabinet Shell (Model 336S or Model 332) shall include all materials and incidentals necessary for full compensation of this work task.

2. Install: The unit price for installing a Cabinet Shell (Model 336S or Model 332) shall include tools, equipment, labor and incidentals necessary to install a complete and accepted installation in accordance with Section 890. This shall be full compensation of this work task.

3. Furnish and Install: The unit price for furnishing and installing a Cabinet Shell (Model 336S or Model 332) shall include all materials, labor, tools, equipment and incidentals necessary for full compensation of this work task.

End of Section

SECTION 895 – PRE-FORMED LOOPS

895.01 - Description

The Contractor shall install pre-formed loops in accordance with the contract documents. This specification describes the minimum acceptable requirements for a prefabricated inductive loop/lead-in assembly. The loop/lead-in assembly shall be suitable for applications in which the loop/lead-in assembly will be overlaid with hot asphalt or embedded in concrete.

895.02 – Materials

The loop cable shall be a four-conductor, double-jacketed cable with a nominal outer diameter of 0.360”. The individual conductors shall be #18 AWG wire (formed from seven strands of #26 AWG copper wire) with a 0.020” thick layer of cross-linked polyethylene (XLPE) insulation. The inner jacket shall be 0.040” thick cross-linked polyethylene (XLPE). The void between the conductors and the inner jacket shall be spiral wrapped with a clear, moisture resistant binder tape and filled with an amorphous water-block compound. The outer jacket shall be 0.035” thick cross-linked polyethylene (XLPE).

The lead-in cable shall be a two-conductor, double-jacketed cable with a nominal outer diameter of 0.275”. The individual conductors shall be #16 AWG wire (formed from nineteen strands of #28 AWG copper wire) with a 0.020” thick layer of cross-linked polyethylene (XLPE) insulation. The inner jacket shall be 0.040” thick cross-linked polyethylene (XLPE). The void between the conductors and the inner jacket shall be spiral wrapped with a clear, moisture resistant binder tape and filled with an amorphous water-block compound. The outer jacket shall be 0.040” thick cross-linked polyethylene (XLPE).

The cross-linked polyethylene (XLPE) insulation used for wire insulation and cable jacketing shall be capable of withstanding temperatures up to 426° Fahrenheit.

SUMMARY:
Loop Cable: Double Jacket, 4-Conductor Cable, 0.360” OD
Conductors: #18 AWG, 7 Strands of 26 AWG copper wire, 0.02” XLPE insulation
Water Block: Cable interior flooded with amorphous material, spiral wrapped with clear moisture resistant binder tape over water block compound
Inner Jacket: 0.040” nominal cross- linked polyethylene jacket
Outer Jacket: 0.035” nominal cross- linked polyethylene jacket

Lead-in Cable: 2-Conductor twisted pair, heavy duty outer jacket, 0.275” OD
Conductors: #16 AWG, 19 Strands of 28 AWG copper wire, 0.02” XLPE insulation
Water Block: Cable interior flooded with amorphous material, spiral wrapped with clear moisture resistant binder tape over water block compound
Outer Jacket: 0.040” nominal cross- linked polyethylene jacket
Splice Container: Constructed of high impact glass impregnated plastic, minimum material thickness 0.24”

The loop / lead-in assembly shall be a Model PLH manufactured by Reno A & E, or an approved equal. Approved equals shall not be allowed unless approved by the City of Norfolk prior to installation.

895.03 – Installation

Splices between the individual loop cable conductors, and the splices between the loop cable conductors and the lead-in cable conductors shall be soldered, sealed, and waterproofed. The enclosure that encapsulates the spliced connections shall be fabricated from a high impact glass impregnated plastic with a minimum thickness of 0.240". The two halves of the splice enclosure shall be sealed with a water resistant gasket material. The interior cavity of the splice enclosure shall be completely filled with an amorphous water block compound. The splice enclosure shall be submerged in a saltwater solution for three (3) days. At the end of this three day period, the electrical integrity of these splices shall be verified by using a 500 Volt DC MegaOhm meter to ensure that the resistance between either lead-in conductor and the saltwater solution is 200 MegaOhms or greater.

895.04 – Measurement and Payment

Method of Measurement – Pre-Formed Loops will be measured in units of Each (EA) per loop/lead-in assembly.

Basis of Payment - The contract unit price per assembly shall be based on the following work tasks.

Install: The unit price for an installed pre-formed loop shall consist of all tools, equipment, hardware, labor and incidentals necessary to build and install a complete and accepted installation, in accordance with Section 895 of this specification.

Furnish and Install: The unit price to furnish and install a pre-formed loop shall consist of a prefabricated inductive loop / lead-in assembly that conforms to Section 895 of this specification, hardware, tools, equipment, labor and incidentals necessary for a complete and accepted installation in accordance with these specifications.

End of Section

SECTION 900 – PAVEMENT PATCH

900.01 - Description

The Contractor shall install pavement patches in accordance with the contract documents.

900.02 – Measurement and Payment

Pavement Patch, Asphalt (Type I, Norfolk Std. HS-301) – payment for the installation of a type S-5 asphalt patch shall be made on a contract unit price basis. Measurement shall be by the square yard (SY) of asphalt installed as well as any base material, if needed. The contract unit price shall include full compensation of the cost of all labor, material, and equipment for the complete installation of the type S-5 asphalt patch in accordance with the contract drawings and specifications.

Pavement Patch, Asphalt over Concrete Pavement (Type II, Norfolk Std. HS-302) – payment for the installation of a type S-5 asphalt patch shall be made on a contract unit price basis. Measurement shall be by the square yard (SY) of asphalt installed over existing concrete pavement. The contract unit price shall include full compensation of the cost of all labor, material, and equipment for the complete installation of the type S-5 asphalt patch in accordance with the contract drawings and specifications.

Pavement Patch, Concrete (Type III, Norfolk Std. HS-303) – Payment for the installation of concrete patch shall be made on a contract unit price basis. Measurement shall be by the square yard (SY) of concrete installed including any base preparation and compaction. The contract unit price shall include full compensation of the cost of all labor, material, and equipment for the complete installation of the concrete pavement patch in accordance with the contract documents.

End of Section

SECTION 901 – RECORD DRAWINGS

901.01 - Description

The Contractor shall furnish the City with two (2) sets of reproducible "record drawings" within 10 days after final inspection. The record drawings shall indicate all changes from the original drawings as bid, including all change orders, alignment changes, depth of underground conduits and utilities installed, and all other items that are not the same as they were originally drawn. The contractor shall prepare the record drawings as the project progresses, by clearly and legibly marking a set of prints that at the end of the project can be turned over to the City as reproducible. The two sets shall be clearly stamped as "RECORD DRAWINGS" on each sheet.

901.02 – Measurement and Payment

Record Drawings will not be measured for separate payment, but will be considered incidental to other signal bid items.

End of Section

APPENDIX A
CITY OF NORFOLK
DEPARTMENT OF PUBLIC WORKS
DESIGN STANDARDS

HAMPTON ROADS
PLANNING DISTRICT COMMISSION
REGIONAL
CONSTRUCTION STANDARDS

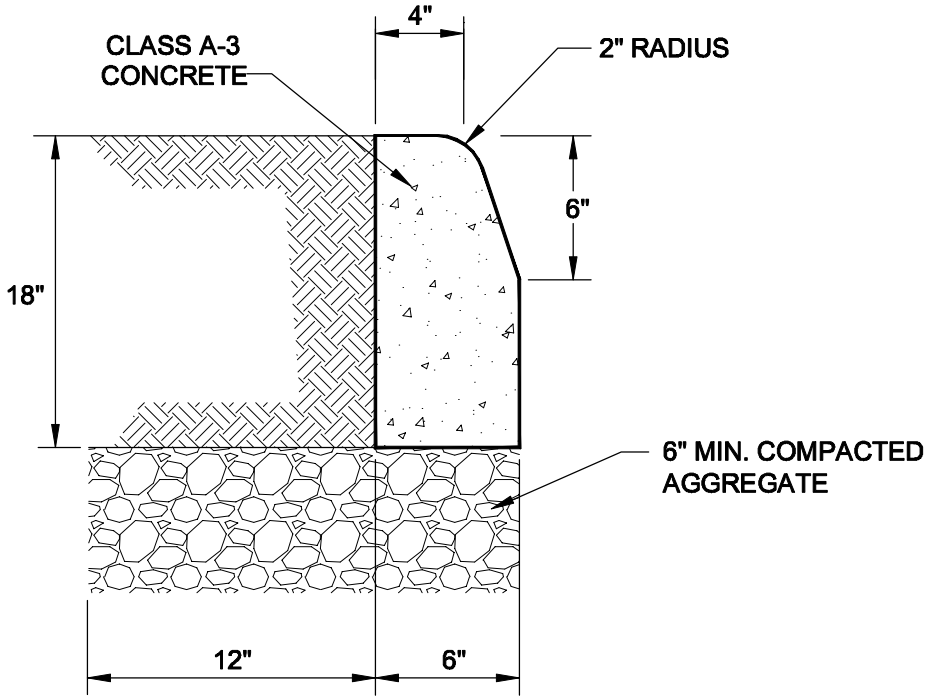

NOTES:

1. CRACK CONTROL JOINTS TO BE PROVIDED AT 10 FT. INTERVALS BY SAWING, SCORING, "LEAVE-IN" INSERTS, OR CUTTER PLATES TO 1-1/2 INCH DEPTH.

2. EXPANSION JOINTS TO BE INSTALLED PER SPECIFICATIONS SECTION 502.

3. AS SOON AS CONCRETE WILL NOT SLUMP, FACE FORMS ARE TO BE REMOVED, IRREGULARITIES REMOVED, A LIGHT BROOM FINISH GIVEN, AND LIQUID MEMBRANE SEAL OR OTHER APPROVED CURING MEDIUM APPLIED.

4. THE CONTRACTOR SHALL PREVENT THE TEMPERATURE AT THE SURFACE OF THE CONCRETE FROM FALLING BELOW 40°F DURING THE FIRST 72 HOURS IMMEDIATELY FOLLOWING CONCRETE PLACEMENT. PROTECTIVE MATERIAL SHALL BE LEFT IN PLACE FOR AN ADDITIONAL 48 HOURS IF FREEZING AIR TEMPERATURES ARE EXPECTED TO CONTINUE.

STANDARD MEDIAN CURB

NOT TO SCALE

REFERENCE	CATEGORY	DATE	SHEET No.	DETAIL No.
200,502	CONCRETE ITEMS	12/10	1 OF 1	CI_03

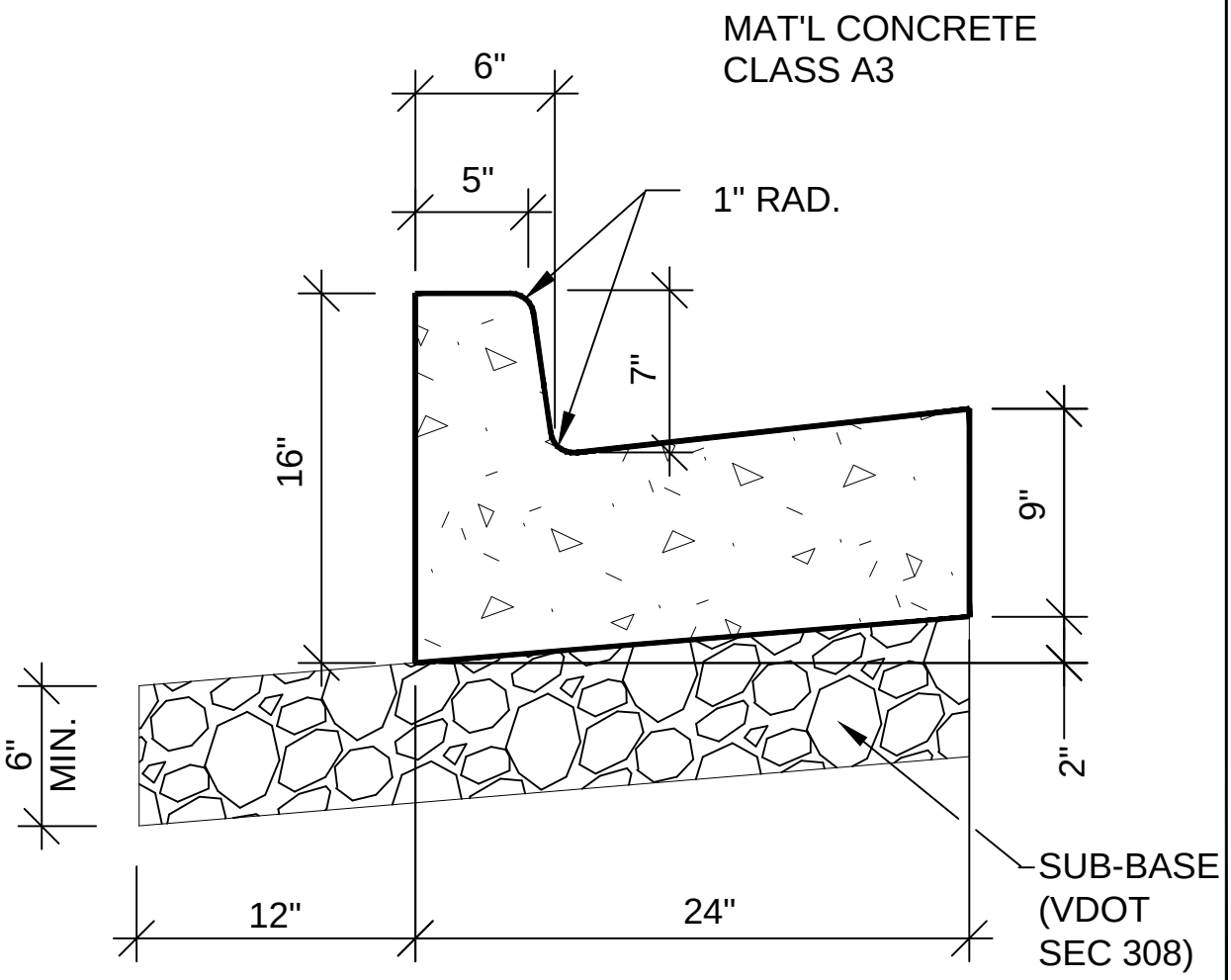

CITY OF NORFOLK DEPT. OF PUBLIC WORKS	DESCRIPTION			DESIGNATION
	7" CURB AND GUTTER			HS-202
	SCALE NOT TO SCALE	EDITION NCDS2014.06	REVISED JUN. 2014	

NOTES:

1. FOR SIDEWALK REPAIR, REPLACE CONCRETE TO THE NEAREST CONSTRUCTION JOINT.
2. AT DRIVEWAY APRONS SIDEWALKS ARE TO MATCH APRON THICKNESS.
3. PROVIDE 2% MAX. CROSS-SLOPE FOR DRAINAGE TOWARD ROADWAY.

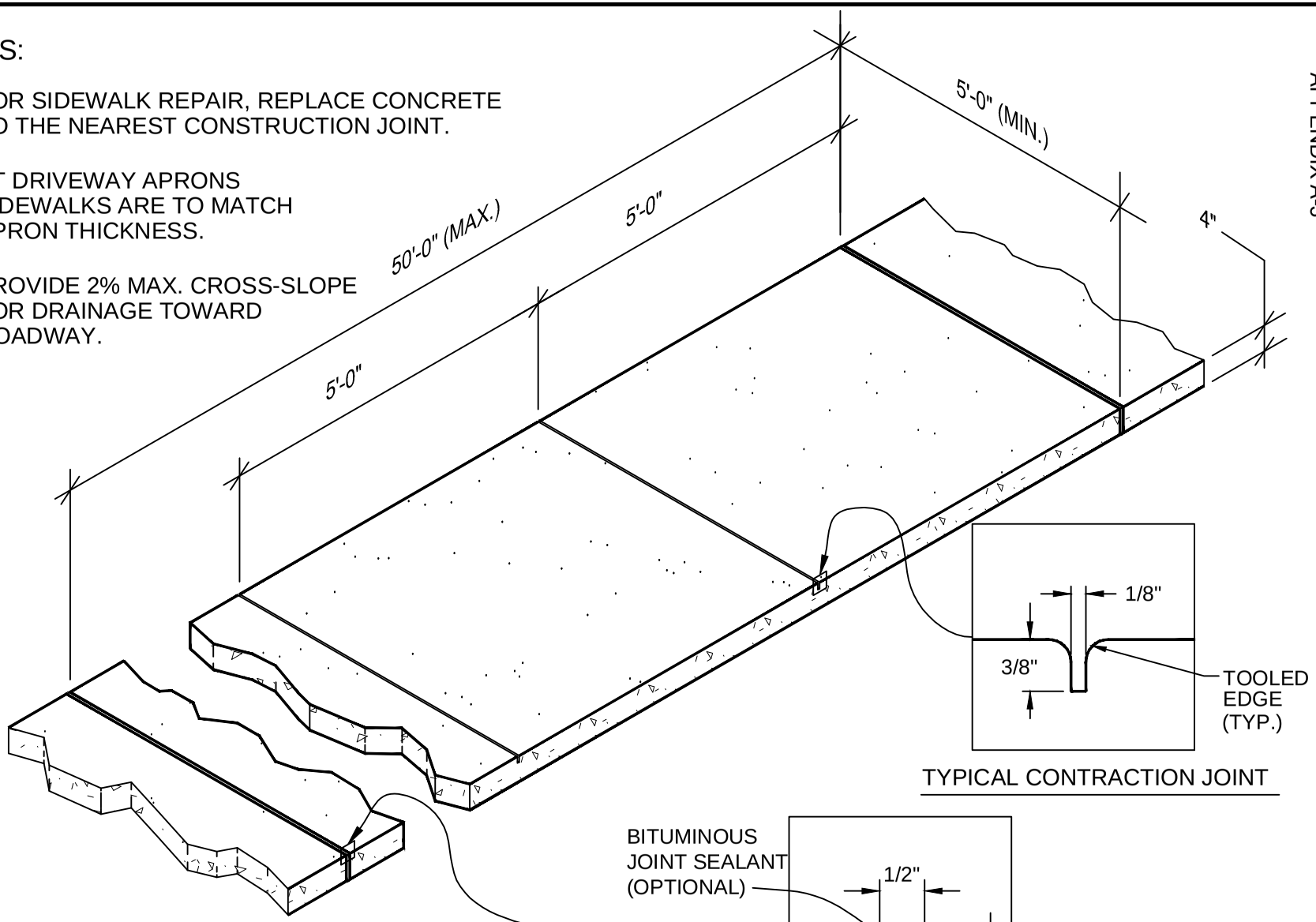

TYPICAL CONTRACTION JOINT

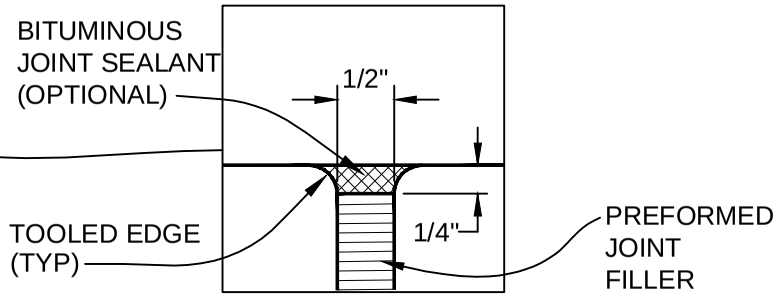

TYPICAL EXPANSION JOINT

CITY OF NORFOLK
DEPT. OF PUBLIC WORKS

DESCRIPTION: STANDARD SIDEWALK DETAIL

SCALE: NOT TO SCALE

EDITION: NCDS2014.06

REVISED: JUN.2014

DESIGNATION: HS-206

NOTES

1. APRONS SHALL BE CONSTRUCTED AT LEAST 3 FT. FROM ALL UTILITY POLES, FIRE HYDRANTS, TELEPHONE PEDESTALS, ETC.
2. APRON FLARES AND ANY OTHER PART OF THE DRIVEWAY SHALL NOT ENCROACH ONTO THE ADJACENT PROPERTY.
3. APRON SLOPES;
   RECOMMENDED: 1/2" : 1'
   NOT TO EXCEED: 1-1/4":1'
   NOT TO EXCEED: 1/4":1' ACROSS PEDESTRIAN CROSSING
4. ALL EXISTING CONCRETE TO BE SAW-CUT PRIOR TO DEMOLITION OR REMOVED TO NEAREST JOINT.
5. RESIDENTIAL DRIVEWAY APRONS SHALL BE 6" THICK OF CLASS A3 CONCRETE WITH 6" OF AGGREGATE BASE MATERIAL.
6. WHERE PROPOSED DRIVEWAY APRON ABUTS CONCRETE PAVEMENT, INSTALL 1/2" EXPANSION JOINTS. APRON SHALL BE MONOLITHIC POUR.

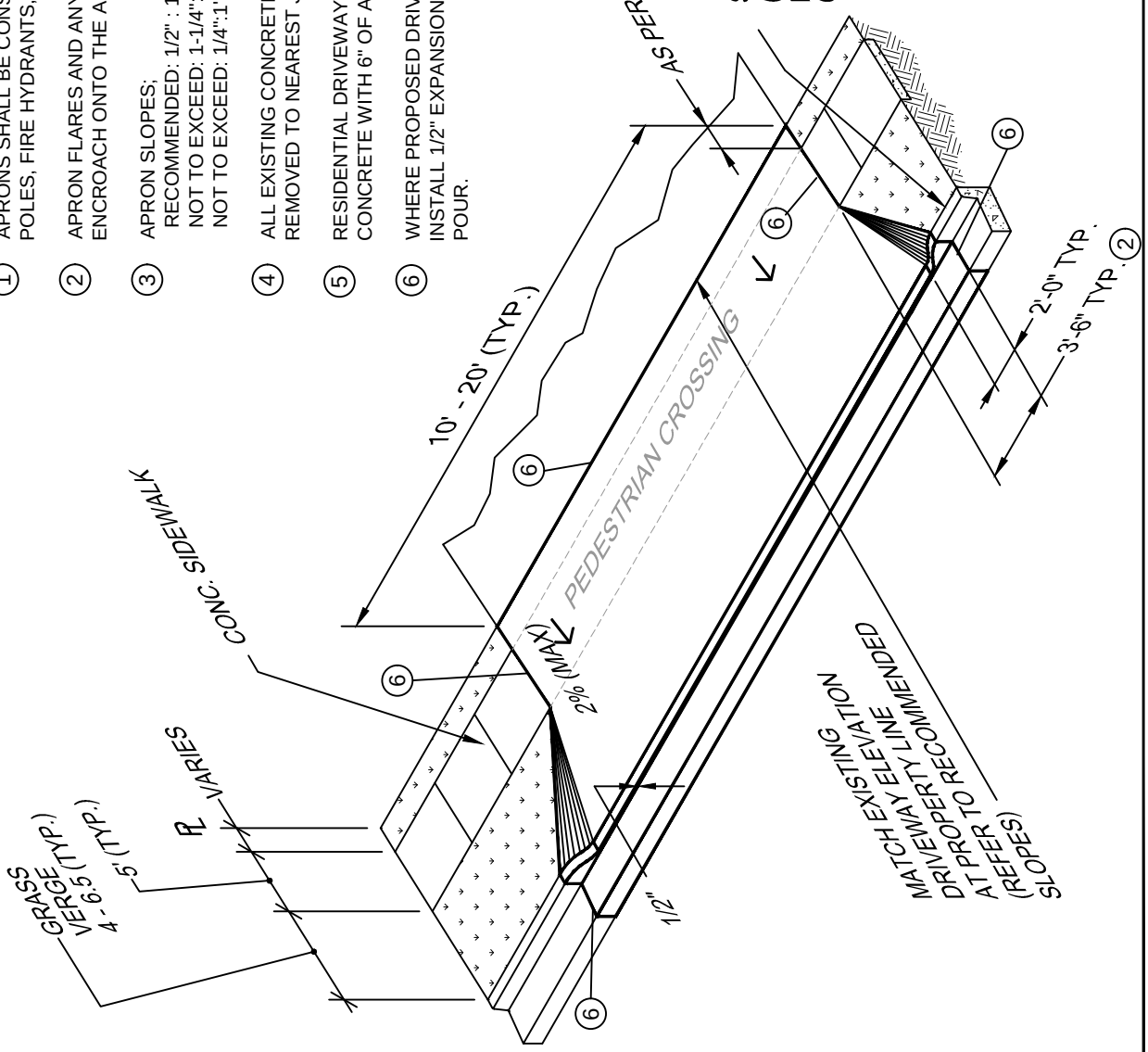

CITY OF NORFOLK	DESCRIPTION			DESIGNATION
DEPT. OF PUBLIC WORKS	STANDARD RESIDENTIAL DRIVEWAY APRON			HS-207
	SCALE: NOT TO SCALE	EDITION: NCDS2014.06	REVISED: JUNE 2014	

NOTES

1. TACK COAT: CRS-1 OR RC-250 @ 0.10 GAL. PER SQUARE YARD ALL VERTICAL SURFACES.
2. REFER TO UTILITY PIPE BEDDING SPECIFICATIONS.

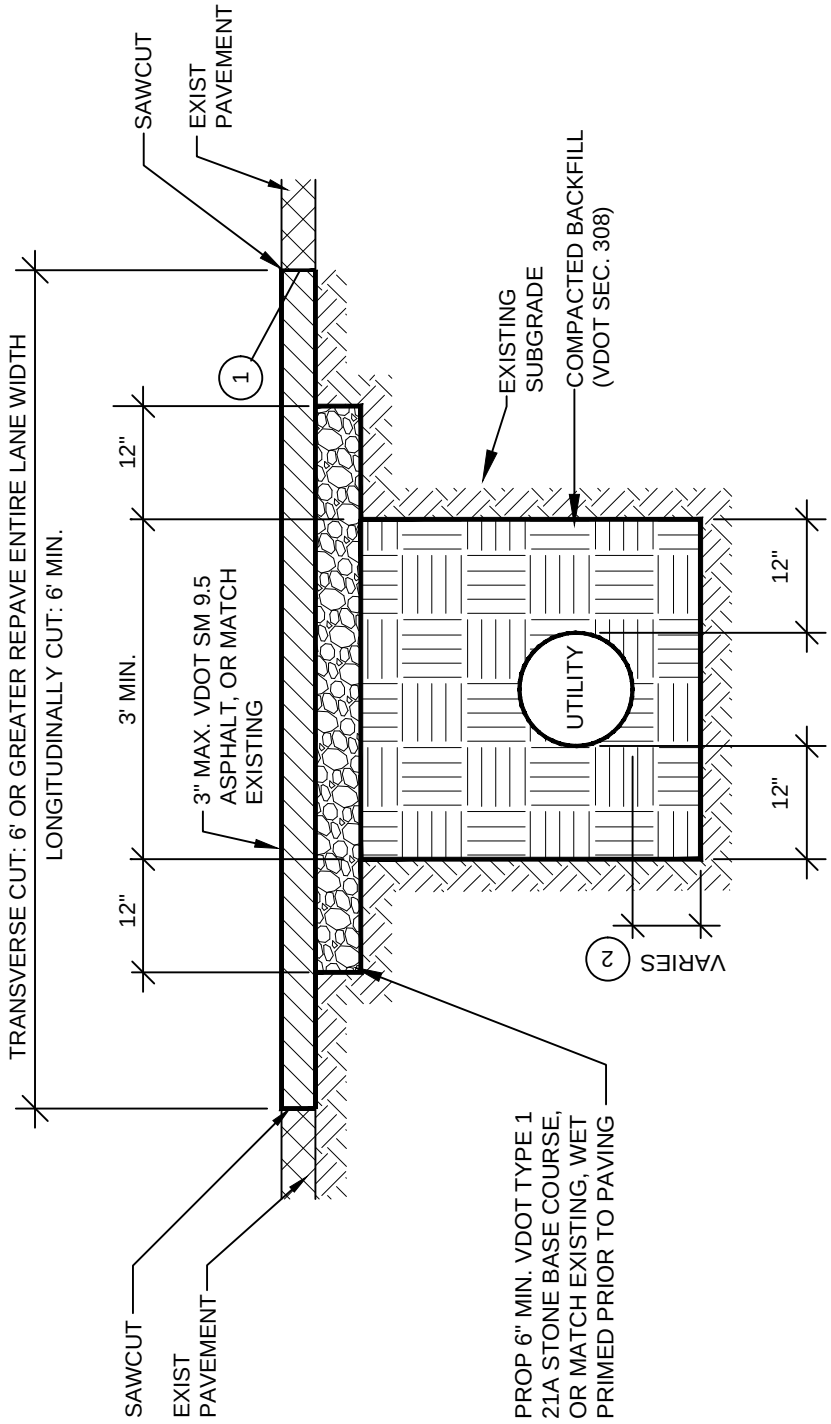

TYPE I
(BITUMINOUS ASPHALT OVER STONE)

CITY OF NORFOLK DEPT. OF PUBLIC WORKS	DESCRIPTION STANDARD PAVEMENT REPLACEMENT ASPHALT OVER STONE			DESIGNATION HS-301
	SCALE NOT TO SCALE	EDITION NCDS2014.06	REVISED JUNE 2014	

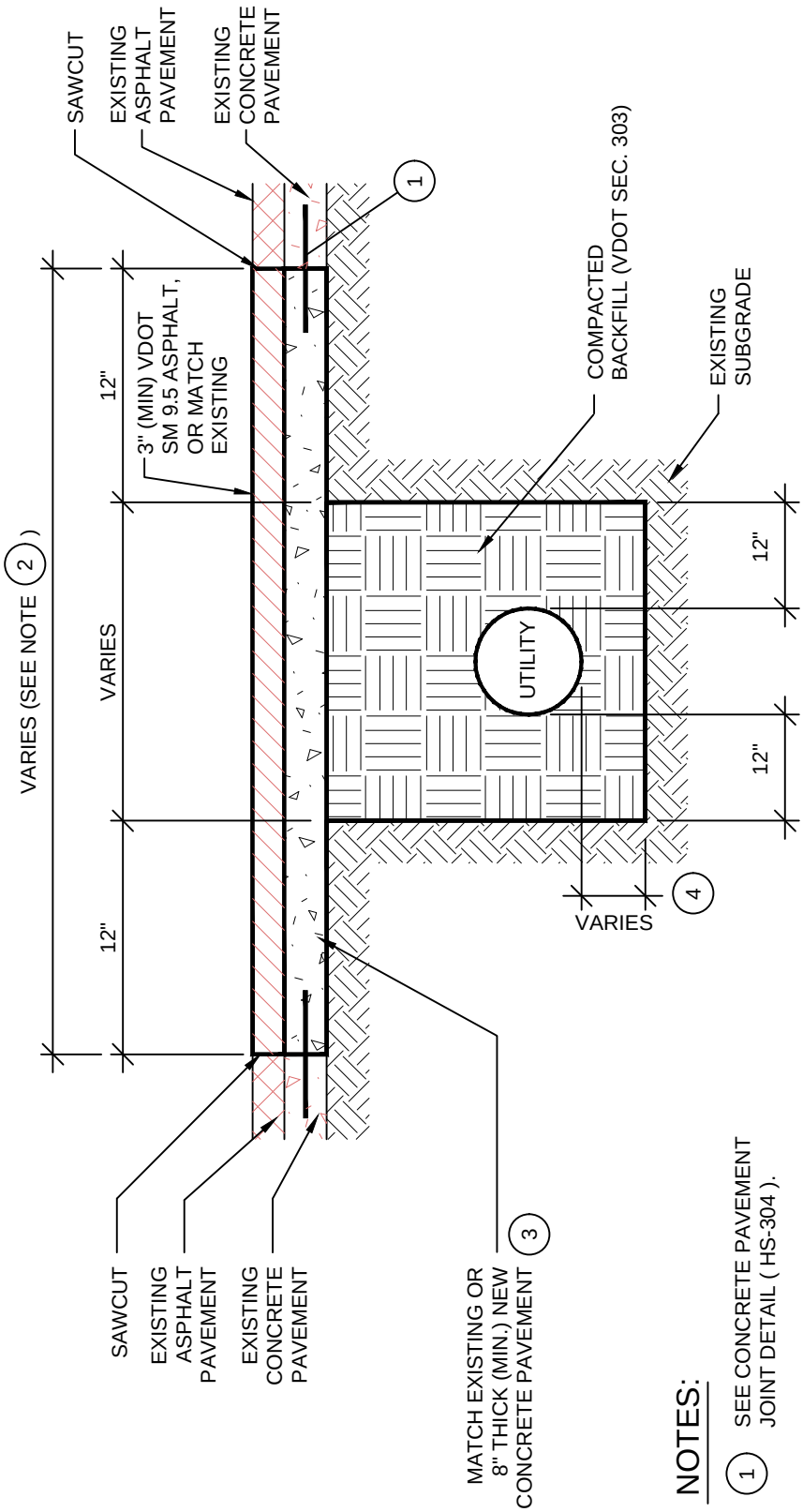

TYPE II
(BITUMINOUS ASPHALT OVER CONCRETE)

NOTES:

1. SEE CONCRETE PAVEMENT JOINT DETAIL (HS-304).
2. LIMITS OF RESTORATION ARE DEFINED IN THE RIGHT-OF WAY EXCAVATION AND RESTORATION MANUAL.
3. CONCRETE SHALL BE CLASS A3 OR CLASS A5 EARLY STRENGTH CONCRETE.
4. REFER TO UTILITY PIPE BEDDING SPECIFICATIONS.

CITY OF NORFOLK DEPT. OF PUBLIC WORKS	DESCRIPTION STANDARD PAVEMENT REPLACEMENT ASPHALT OVER CONCRETE			DESIGNATION HS-302
	SCALE NOT TO SCALE	EDITION NCDS2014.06	REVISED JUNE 2014	

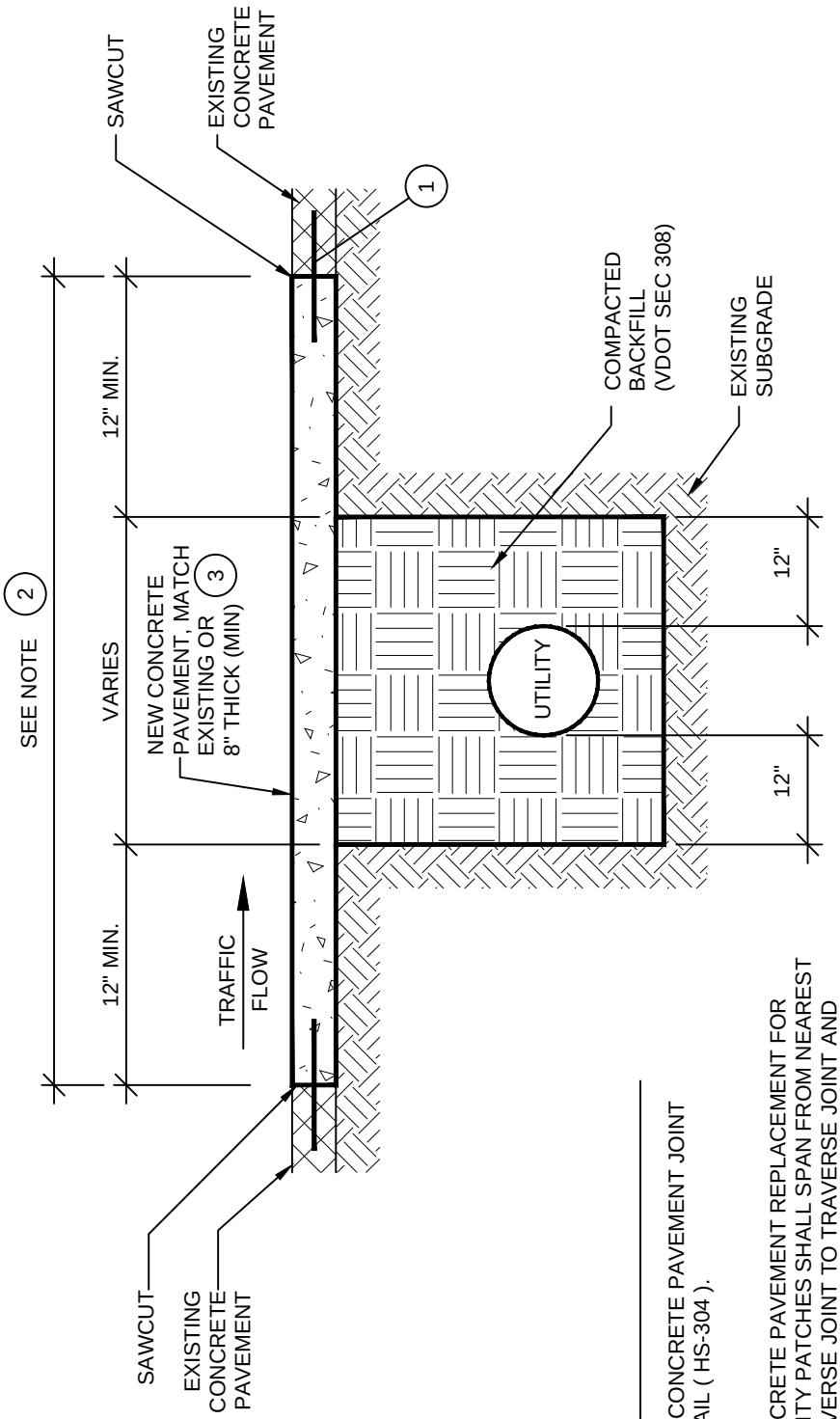

TYPE III
(CONCRETE)

NOTES

1. SEE CONCRETE PAVEMENT JOINT DETAIL (HS-304).
2. CONCRETE PAVEMENT REPLACEMENT FOR UTILITY PATCHES SHALL SPAN FROM NEAREST TRAVERSE JOINT TO TRAVERSE JOINT AND FROM LONGITUDINAL JOINT TO LONGITUDINAL JOINT. DEFINED IN THE RIGHT-OF-WAY EXCAVATION AND RESTORATION MANUAL.
3. CONCRETE SHALL BE CLASS A3 OR CLASS A5 EARLY STRENGTH CONCRETE.

CITY OF NORFOLK DEPT. OF PUBLIC WORKS	DESCRIPTION STANDARD PAVEMENT REPLACEMENT CONCRETE			DESIGNATION HS-303
	SCALE NOT TO SCALE	EDITION NCDS2014.06	REVISED JUNE 2014	

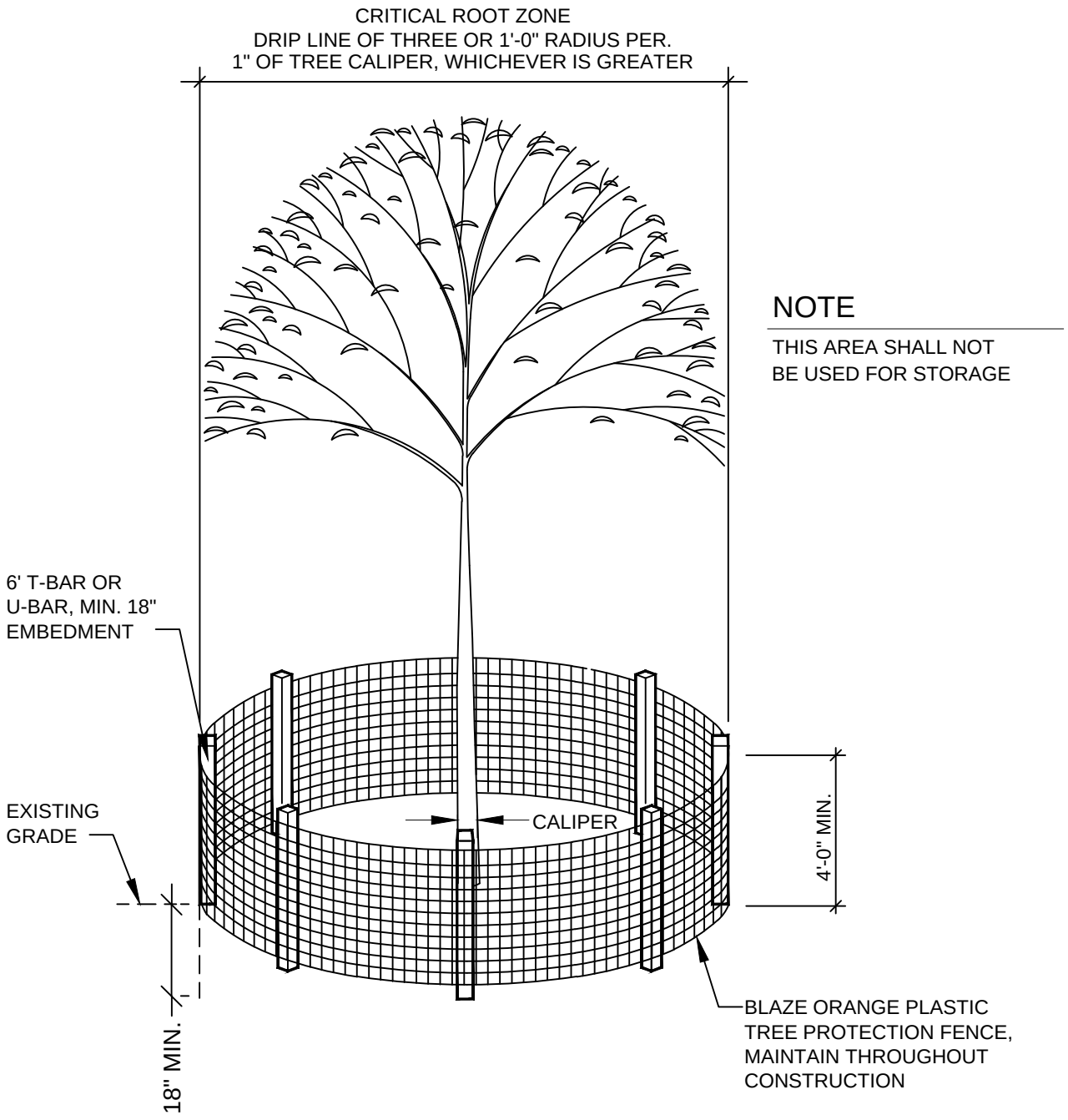

NOTE

THIS AREA SHALL NOT BE USED FOR STORAGE

CITY OF NORFOLK DEPT. OF PUBLIC WORKS	DESCRIPTION STANDARD TREE PROTECTION DETAIL			DESIGNATION HS-602
	SCALE NOT TO SCALE	EDITION NCDS2014.06	REVISED JUNE 2014	

APPENDIX B
METRO STREET NAME SIGN DETAIL

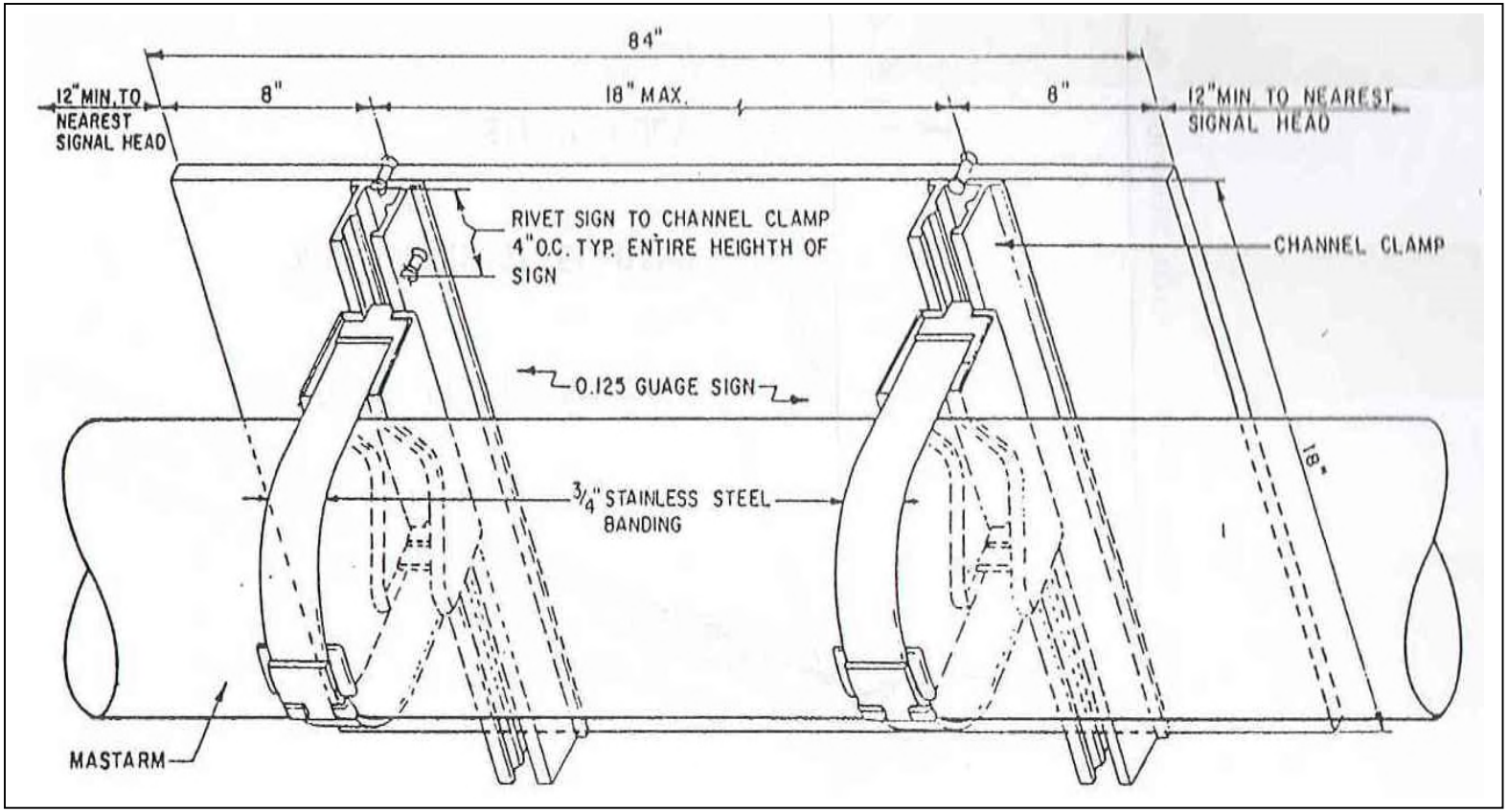

METRO STREET NAME SIGN DETAIL

APPENDIX B-1

APPENDIX C
CCTV POLE DETAIL

APPENDIX C-1

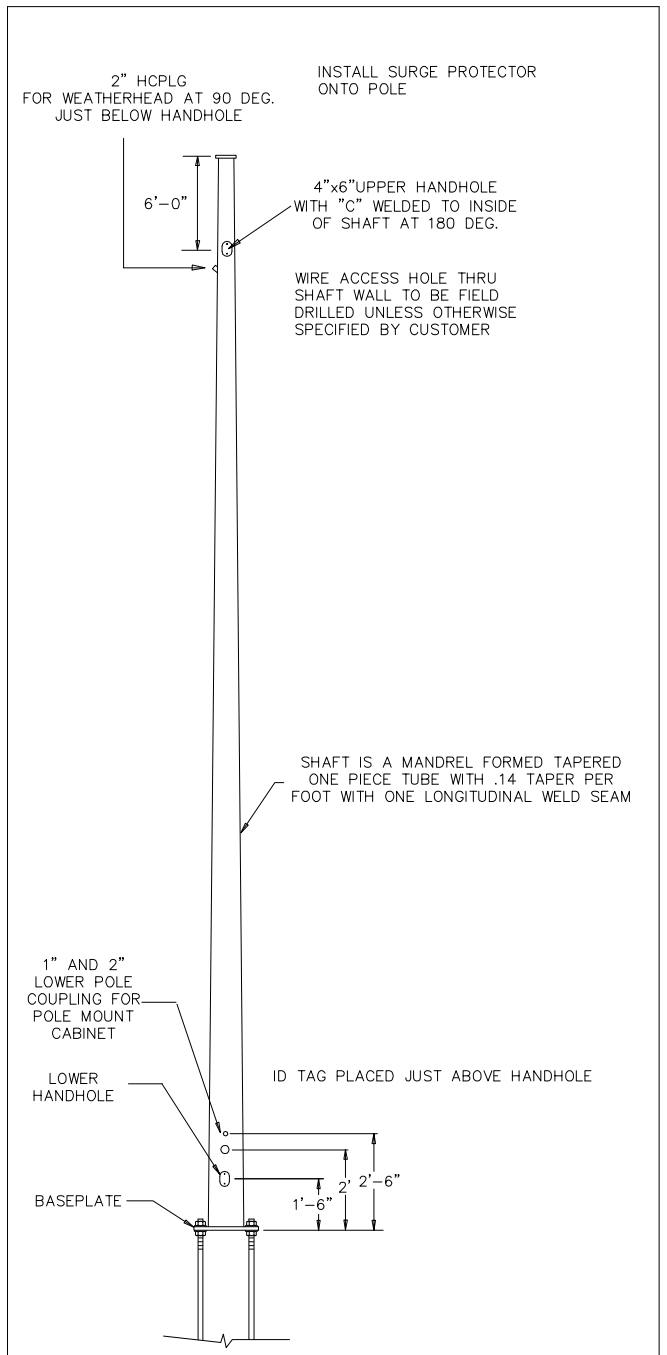

LOADING AND ALLOWABLE STRESS CRITERIA:
4th Edition AASHTO "STANDARD SPECIFICATIONS FOR STRUCTURAL SUPPORTS FOR HIGHWAY SIGNS, LUMINAIRES AND TRAFFIC SIGNALS".

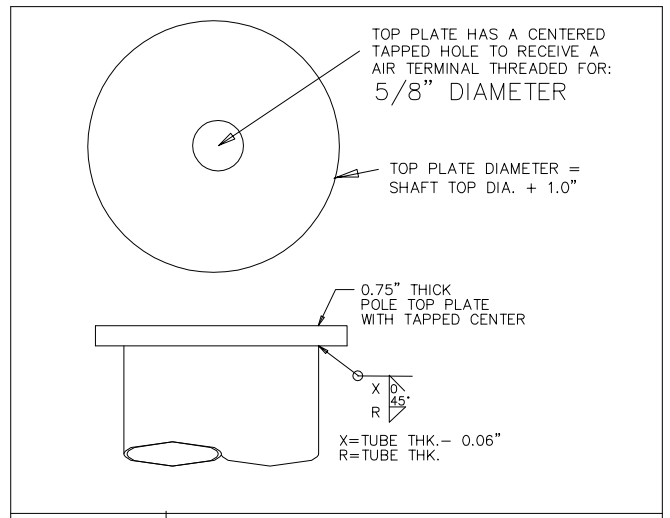

DETAIL — POLE TOP PLATE

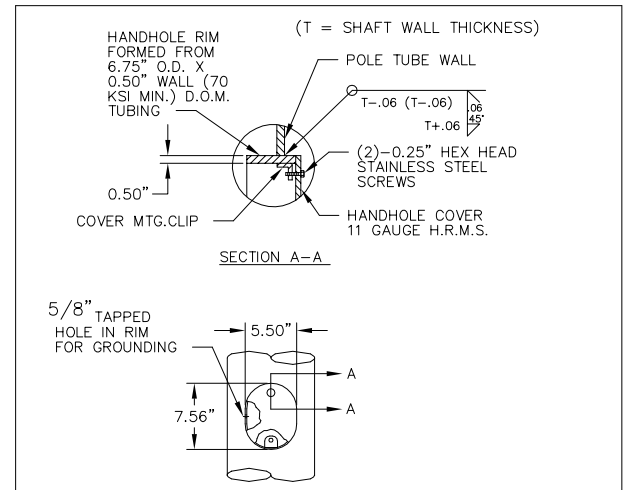

HANDHOLE

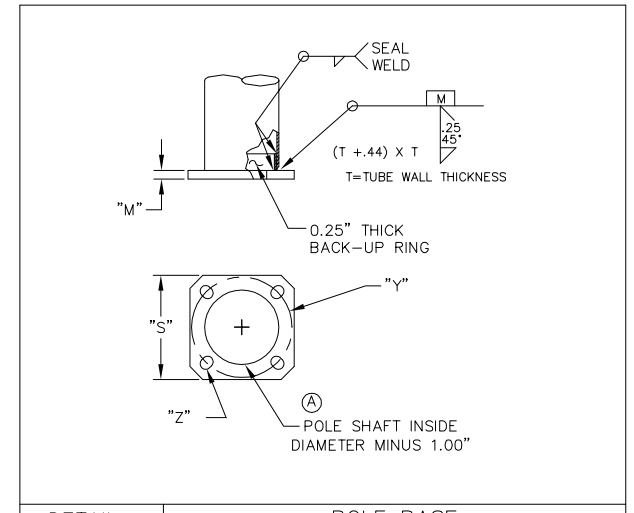

DETAIL — POLE BASE

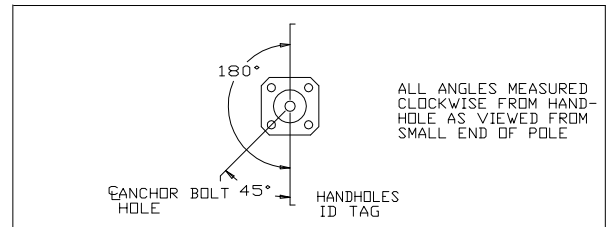

RADIAL INDEX

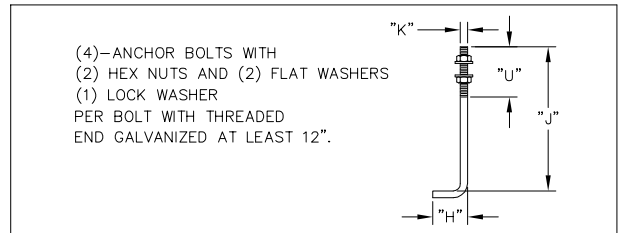

DETAIL — ANCHOR BOLT

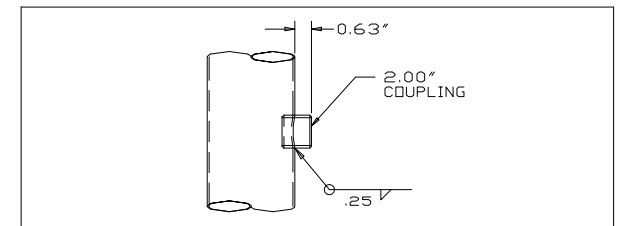

2' LOWER POLE COUPLING

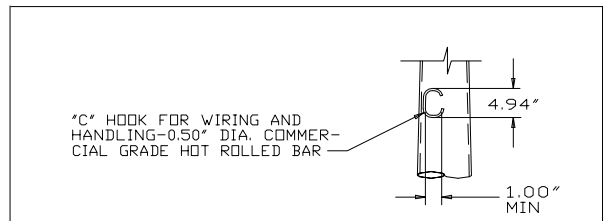

DETAIL — WIRING HOOK OPPOSITE HANDHOLE

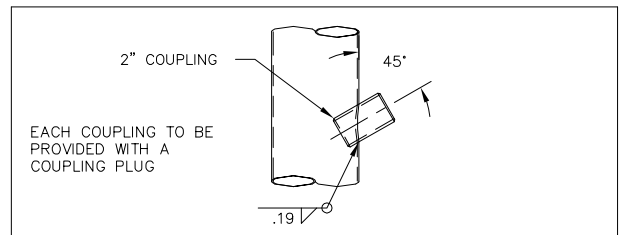

DETAIL X — UPPER POLE COUPLING

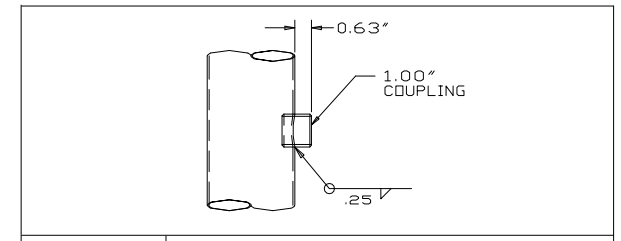

1 ' LOWER POLE COUPLING

POLE DATA

ITEM NO.	QTY.	POLE HEIGHT (FT)	NO. L.D. ARMS REQD	TUBE					POLE BASE				ANCHOR BOLT				
					BASE DIAMETER (IN)	TOP DIAMETER (IN)	LENGTH (FT)	GAUGE OR THICK (IN)	SQUARE "S" (IN)	BOLT CIRCLE "Y"(IN)	THICK "M" (IN)	BOLT HOLE, DIA. "Z" (IN)	DIA. "K" (IN)	LENGTH "J" (IN)	HOOK "H" (IN)	THREAD LENGTH "U" (IN)	NUM. REQ'D
		45.00	–		13.00	6.70	45.00	.1793	18.50	18.00	1.5	1.75	1.50	54.0	6	10	4

MATERIAL DATA

COMPONENT	ASTM DESIGNATION	MIN. YIELD <KSI>	COMPONENT	ASTM DESIGNATION	MIN. YIELD <KSI>
POLE SHAFT- 3,5,7,11 GA.	A595 GR.A	55	ARM CONN. BOLTS	A325	
POLE SHAFT- ALL OTHERS	A572 GR.65	65	GALVANIZING – STRUCTURE	A123	
POLE PLATE	A572	42	GALVANIZING- HARDWARE	A153	
TENON – C.D.S. TUBING	----	42	ANCHOR BOLTS✳	F1554 GR.55	55

✳ BOLTS TO BE WELDABLE GRADE WITH A194-2H NUTS

REV.	DATE	REVISION

City of Norfolk

SOLD TO

DATE: DRWN:

CCTV CAMERA
POLE STANDARD

DRAWING # REV.

CCTV CAMERA POLE
DETAIL

APPENDIX D
SCHOOL ZONE FLASHING BEACON ASSEMBLY DETAILS

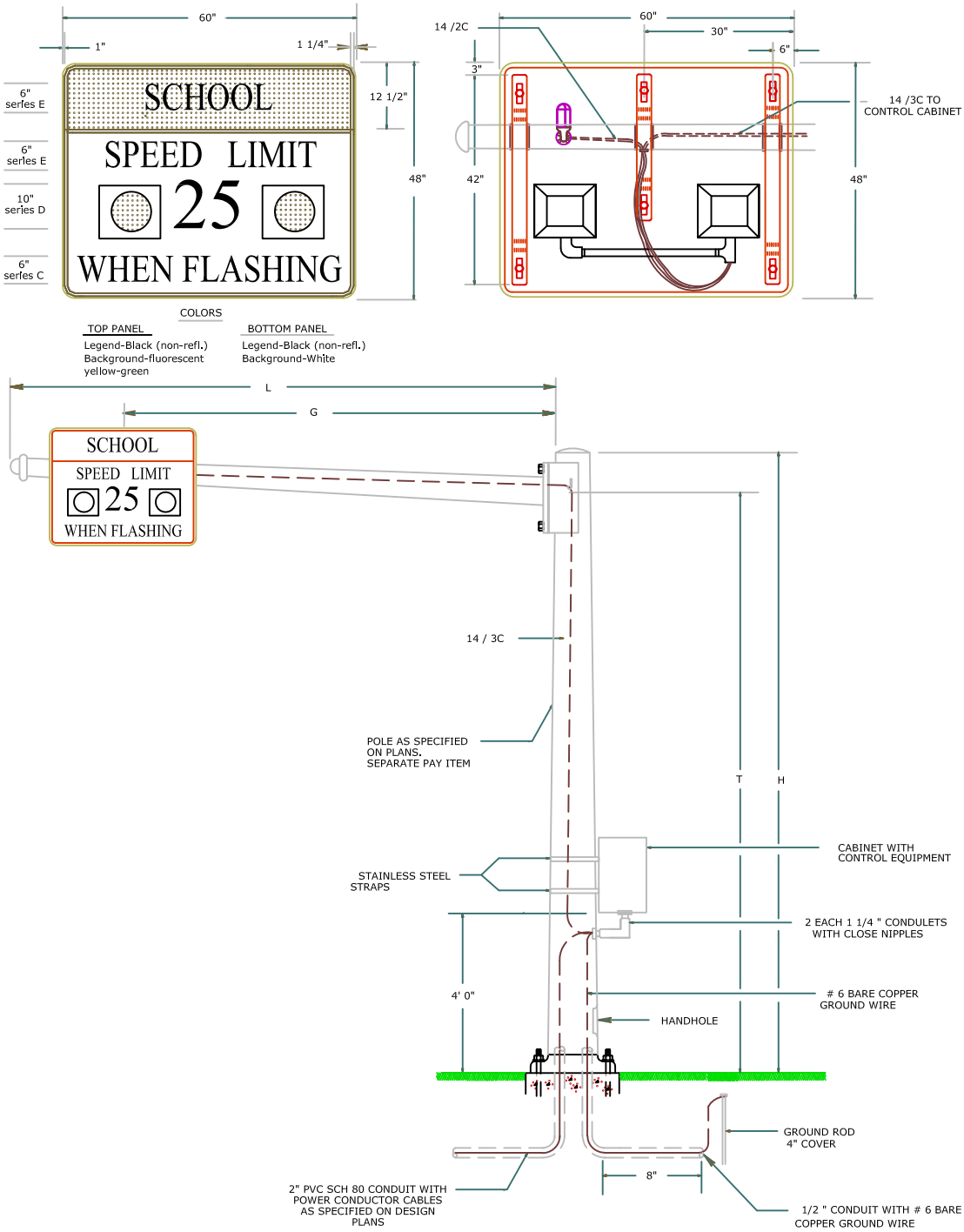

School Zone Flashing Beacon Mast Arm Assembly

Traffic Signal IDQ D-1

City of Norfolk
Department of Public Works

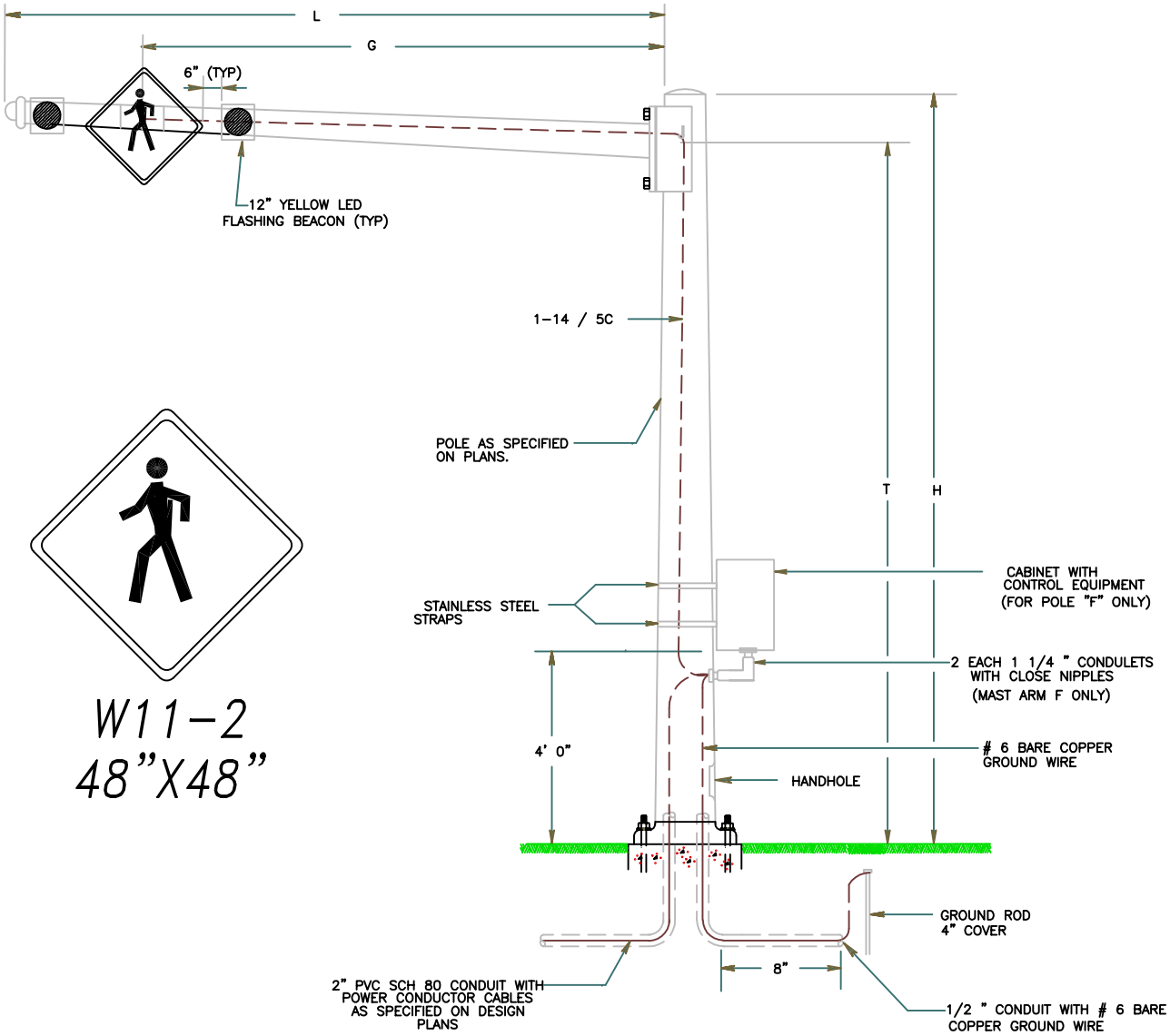

CITY OF NORFOLK, VIRGINIA - DEPARTMENT OF PUBLIC WORKS - 810 UNION STREET 23510 - SUITE 200 - PHONE 757-664-7300

Pedestrian Crossing Flashing Beacon Mast Arm Assembly

Traffic Signal IDQ D-2

City of Norfolk
Department of Public Works

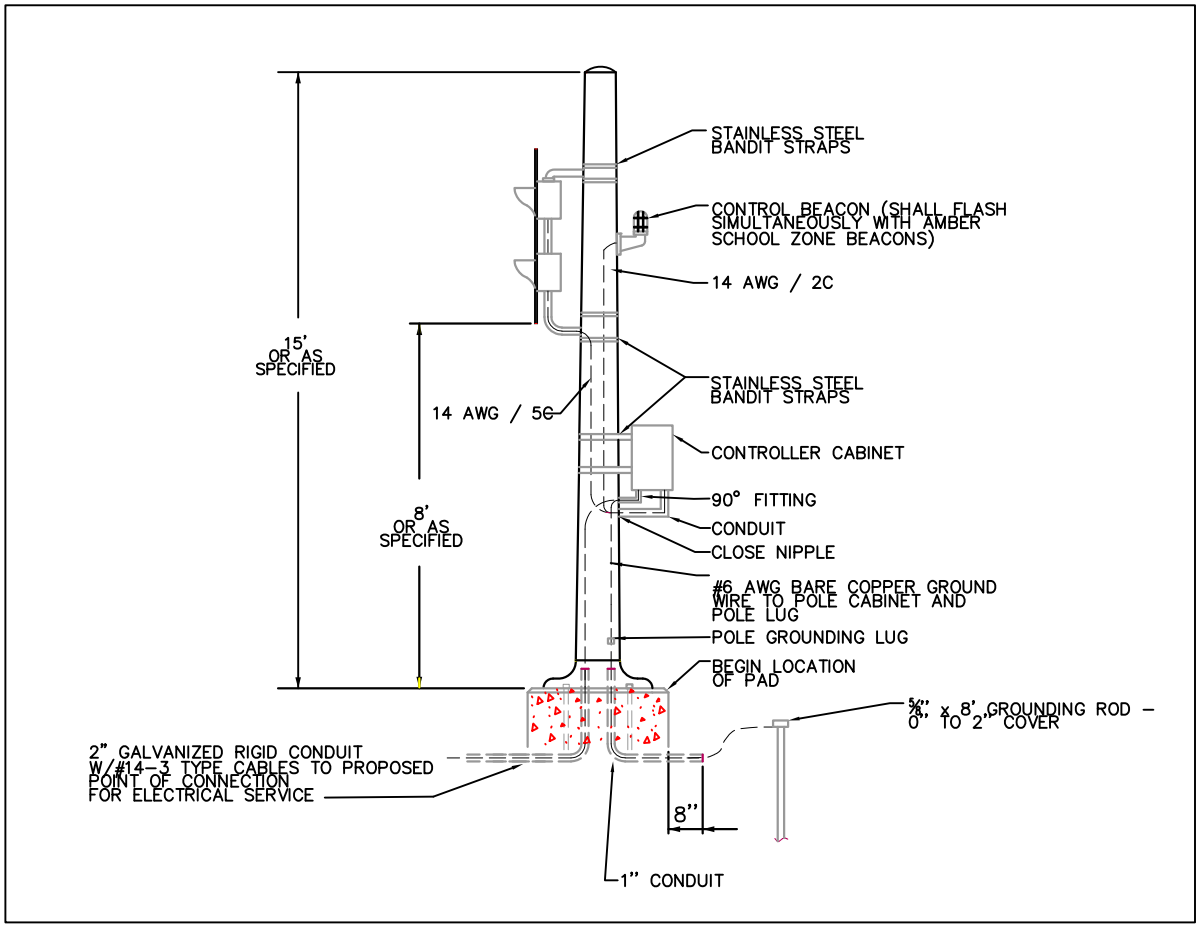

Proposed Signs

S-2
12" Yellow LED
30" x 72"

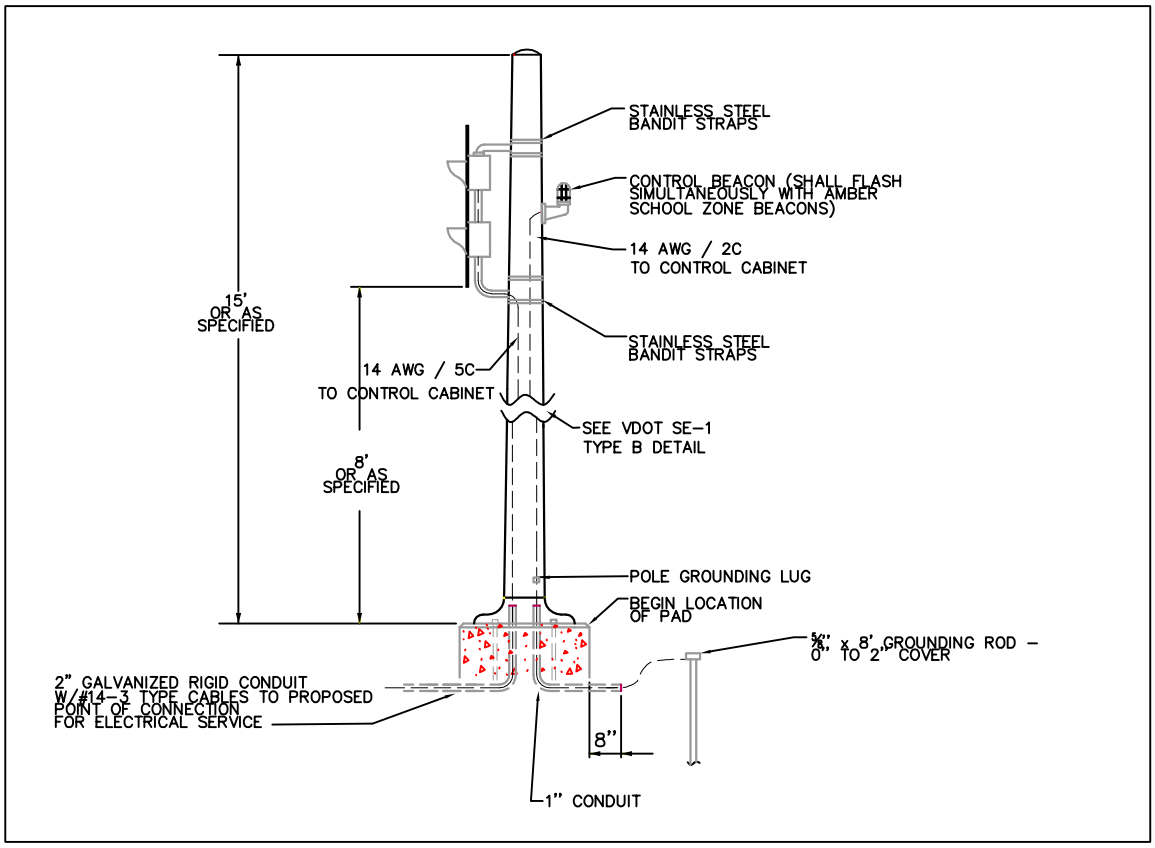

Proposed Signs

S-2
MUTCD S5-1
12" Yellow LED
30" x 72"

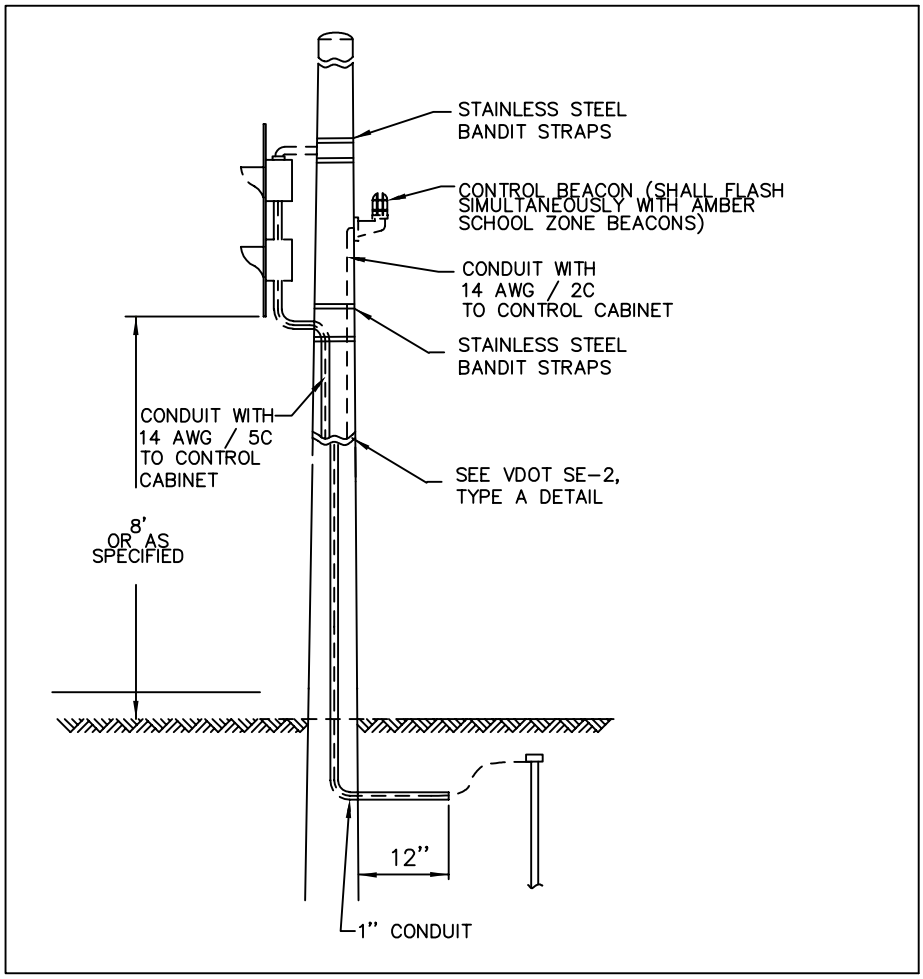

Existing Wood Pole Mounted School Flashing Beacon Detail

Proposed Signs

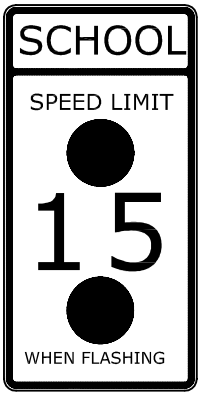

S-2
12" Yellow LED
30" x 72"

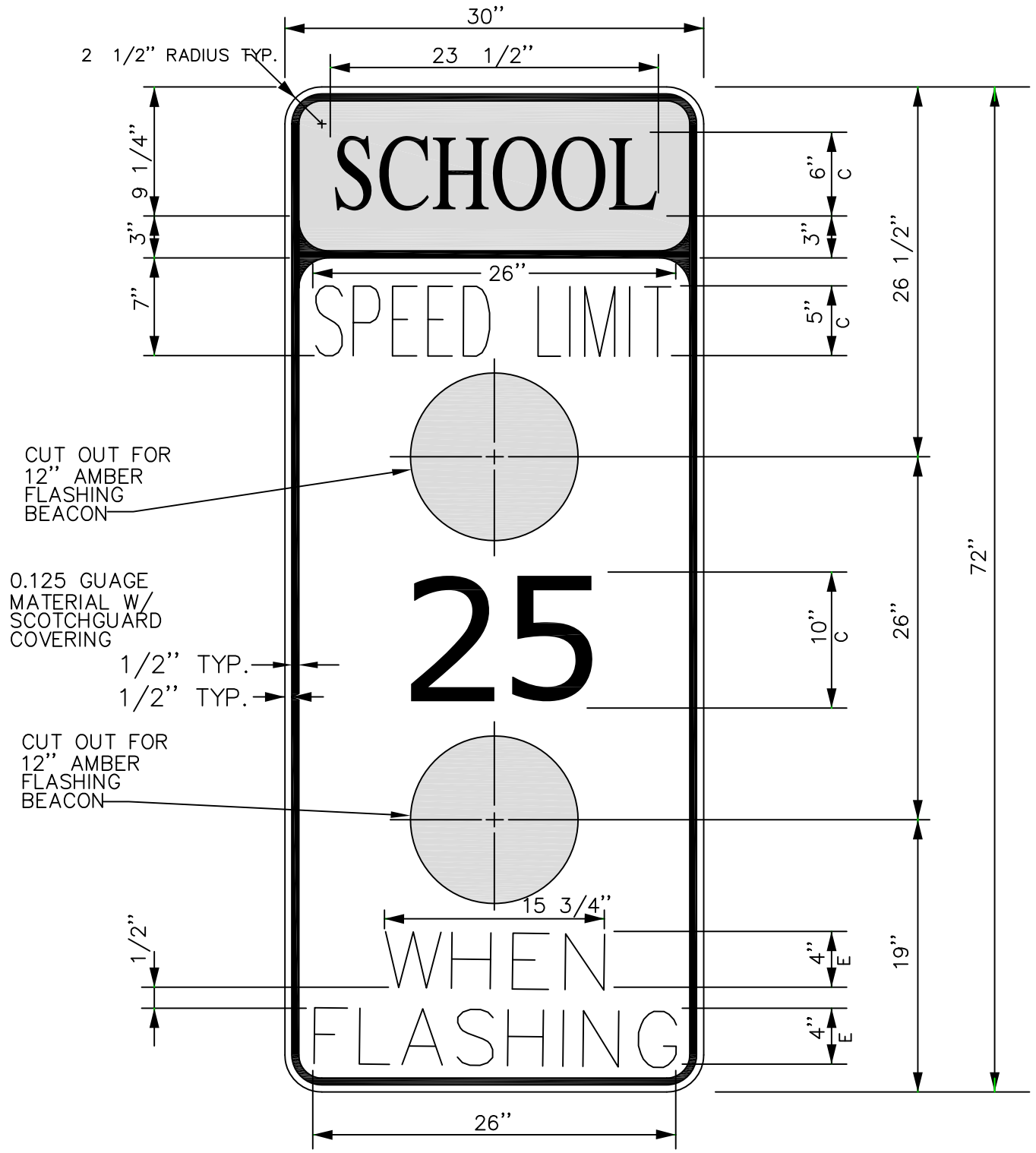

COLORS

TOP PANEL
LEGEND – BLACK (NON–REFL.)
BACKGROUND – FLUORESCENT YELLOW–GREEN

BOTTOM PANEL
LEGENDS – BLACK (NON–REFL.)
BACKGROUND – WHITE

Proposed Signs

S-2

12" Yellow LED

City of Norfolk
Department of Public Works

Date	Description	Inits
	REVISIONS	

CITY OF NORFOLK, VIRGINIA - DEPARTMENT OF PUBLIC WORKS - 810 UNION STREET 23510 - SUIT 200 - PHONE 757-664-7300

School Flashing Beacon - School signals D6

APPENDIX E
DOWNTOWN STANDARD POLE DETAILS

APPENDIX E-1

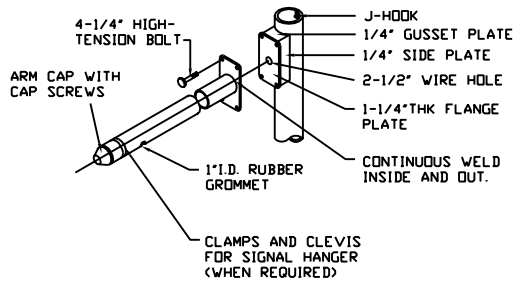

ARM AND SIGNAL ATTACHMENT

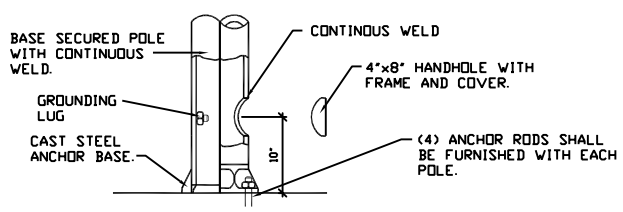

HANDHOLE DETAIL

A. POLE SHAFT LENGTH AND MAST ARM MOUNTING HEIGHT SHALL BE AS REQUIRED TO OBTAIN SPECIFIED MOUNTING HEIGHT OF TRAFFIC SIGNAL HEADS AND LUMINAIRES.

B. AS REQUIRED BY PLANS.

C. AS REQUIRED BY PLANS.

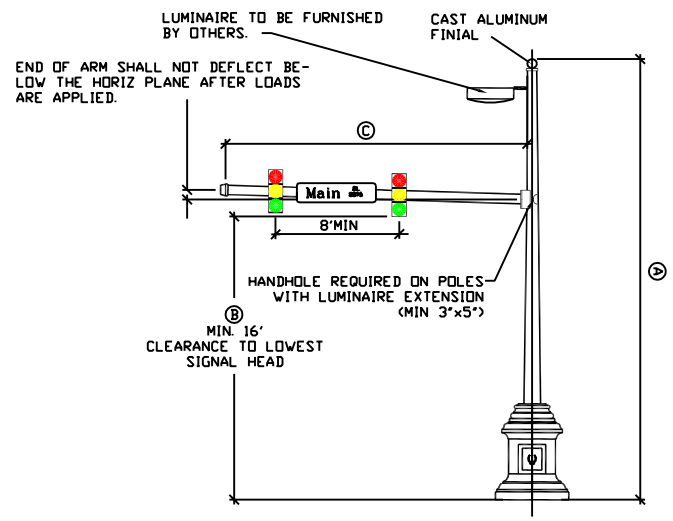

MAST ARM POLE DETAILS
NO SCALE

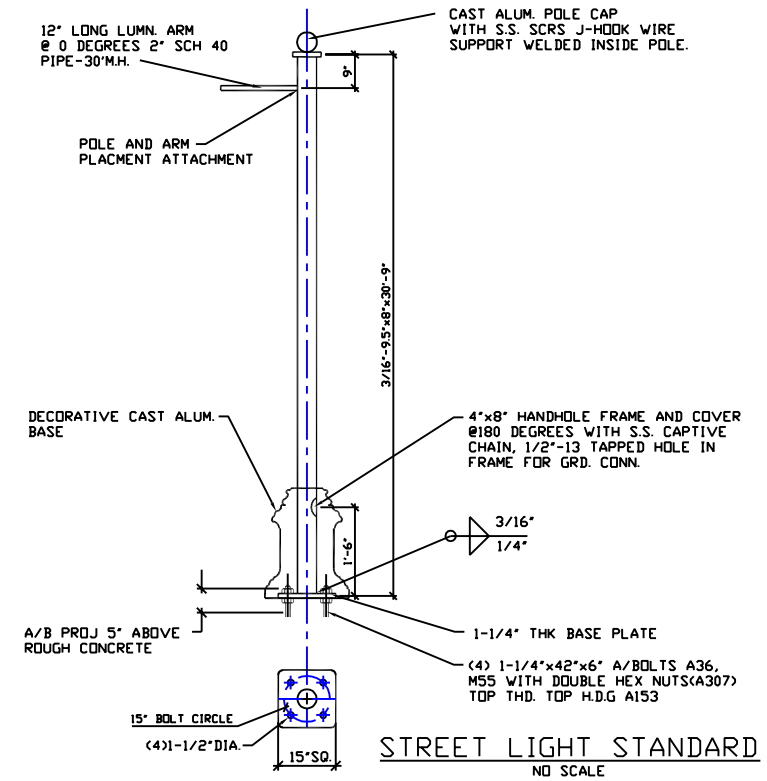

STREET LIGHT STANDARD
NO SCALE

GENERAL NOTES

FINISH

The finish shall conform to the requirements as specified in the contract plans and specifications according to the following:

1. All steel components, nuts, bolts, screes shall have shop painted finish coat.
2. The color shall be City of Norfolk Green, Federal Green number 14062.
3. Paint shall be Amerlock 400, high build, high solids (minimum 76% solids), self-priming epoxy, polyamide, semi-gloss finish with a one to one mixing ratio. The paint shall be applied to a dry film thickness of 5 mils or more.
4. A final coat of Amershield aliphatic polyurethane, number 51067, shall be applied to a thickness of 3 mils or more.

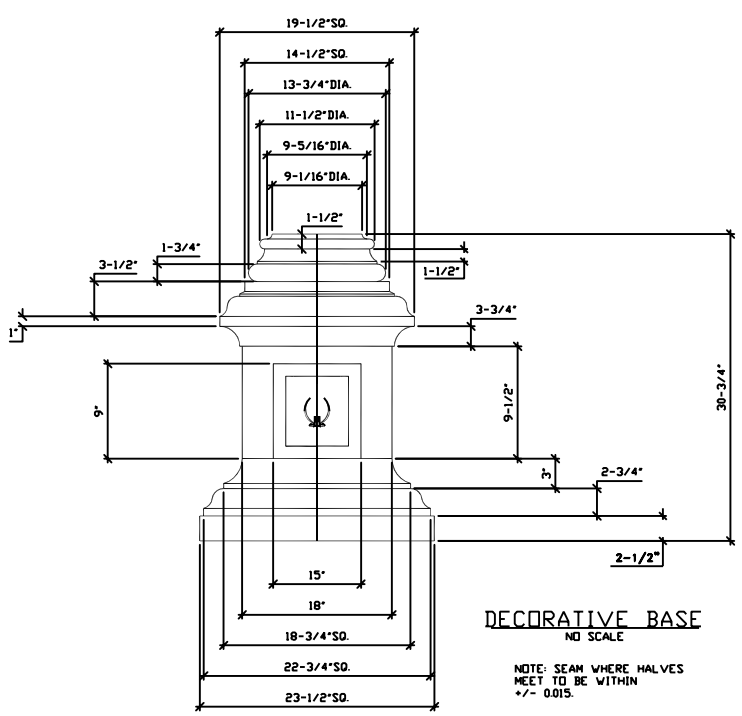

DECORATIVE BASE
NO SCALE

NOTE: SEAM WHERE HALVES MEET TO BE WITHIN +/- 0.015.

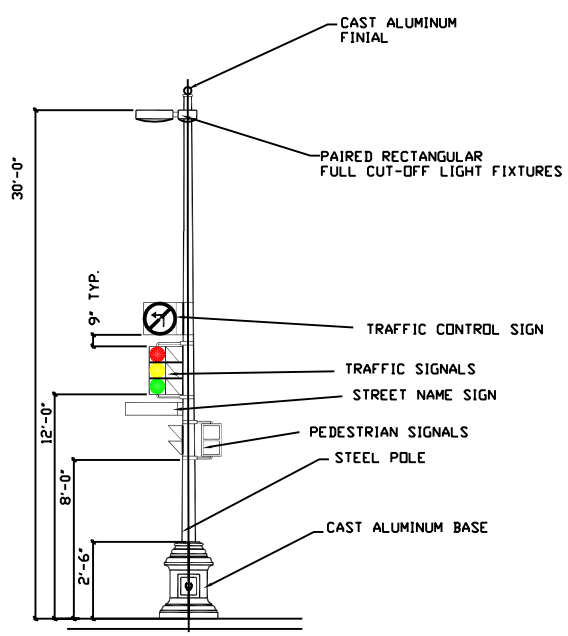

SIGNALS, SIGNAGE AND LIGHTING AT MAJOR INTERSECTION.

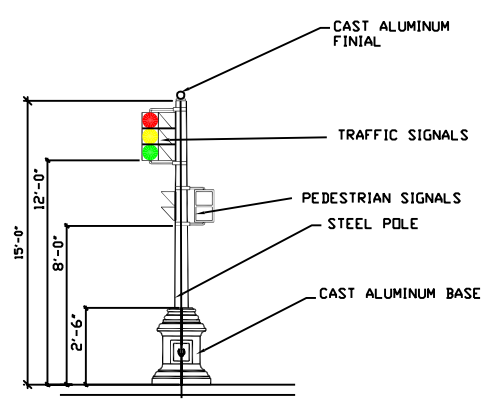

PEDESTAL POLE

POLE #	LENGTHS		
	Ⓐ	Ⓑ	Ⓒ
1	30'-9"	16'-0"	46'-0"
2	15'-0" (NO LUMINAIRE)	12'-0"	0'-0"
3	30'-9"	16'-0"	30'-0"
4	30'-9"	16'-0"	48'-0"
5	A 30'-9" B 30'-9"	16'-0" 16'-0"	20'-0" 14'-0" } @ 180°

EXAMPLE

REVISIONS		
Date	Description	Inits
12/07	Changed Pole type to steel	rdb

City of Norfolk
Department of Public Works
Division of Traffic Engineering

STANDARD DOWNTOWN TRAFFIC DETAILS

Drawn by: B. STEWART	Designed by: C. VIDRINE
Checked by:	Date: 5/5/92
Scale: NONE	Sheet 1 of 1

APPENDIX F
LOOP DETAIL

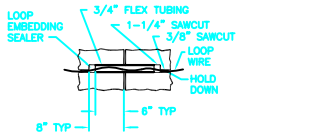

TOP VIEW

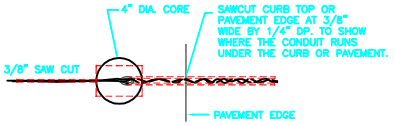

NOTE: CURB DETAIL IS SHOWN BY THE DASHED LINES RUN THE CONDUIT UNDER THE CURB.

TOP VIEW

TYPICAL LOOP CONFIGURATIONS

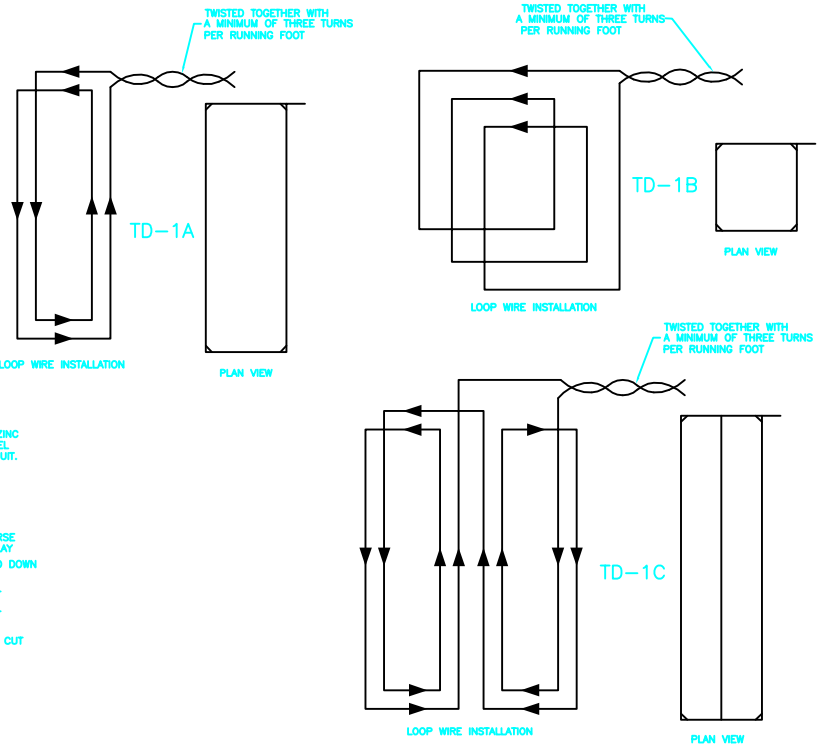

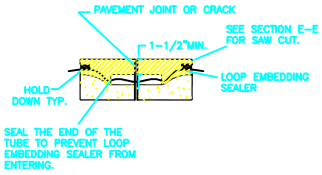

DETAIL A–CROSSING PAVEMENT JOINTS OR CRACKS

(NO SCALE)

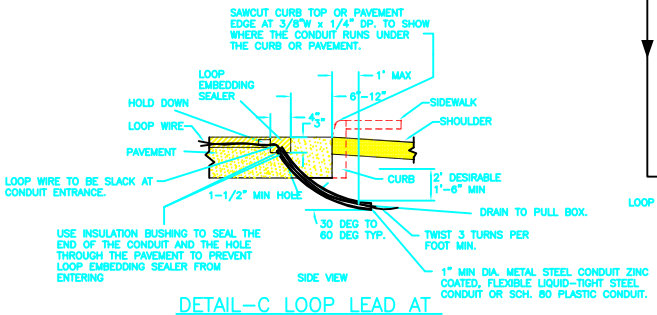

DETAIL–C LOOP LEAD AT PAVEMENT EDGE

(NO SCALE)

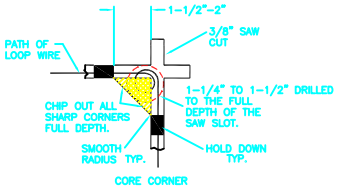

NOTE: ON BOTH CORNER DETAILS PLACE THE LOOP NEAR THE CENTER OF THE CORNER TO ALLOW THE SEALANT TO FLOW ON BOTH SIDES OF THE WIRE.

DETAIL–B CORNER DETAILS

(NO SCALE)

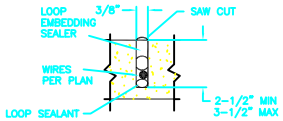

SECTION: E–E

CONCRETE OR ASPHALT

(NO SCALE)

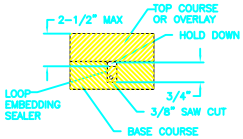

SECTION: E–E

ASPHALT OVERLAY

(NO SCALE)

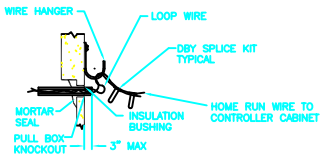

DETAIL F

(NO SCALE)

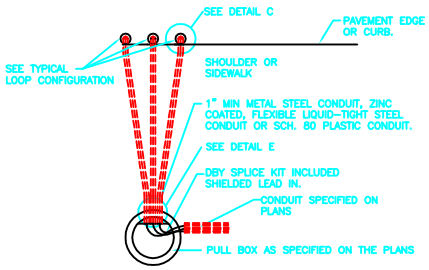

LOOP INSTALLATION DETAILS

(NO SCALE)

NOTES:

1. LOOP WIRE MUST BE IN ACCORDANCE WITH SPECIFICATIONS AND SPECIAL PROVISIONS.
2. EACH LOOP SHALL BE IDENTIFIED BY LANE AND PERMANENTLY TAGGED IN EACH JUNCTION BOX AND IN THE CONTROLLER CABINET.
3. ADD ONE TURN TO ANY LOOP OVER THREE INCHES DEEP.
4. SAWCUTS SHALL BE DEEP ENOUGH TO ALLOW A MINIMUM OF ONE INCH OF SEALANT OVER WIRES.
5. MULTIPLE LOOPS CONNECTED TO THE SAME DETECTOR CHANNEL SHALL HAVE REVERSED POLARITIES AND BE CONNECTED IN SERIES.
6. ALL LOOPS TO BE GUARANTEED TO REGISTER 500M OHMS (AT 500 VOLTS) MINIMUM FOR A PERIOD OF ONE YEAR AFTER INSTALLATION.

REVISIONS		
Date	Description	Inits
	G	

City of Norfolk
Department of Public Works
Division of Transportation Engineering

TYPICAL LOOP DETAIL

Drawn by: B.STEWART	Designed by: C.VIDRINE
Checked by:	Date: 9/19/1999
Scale: NONE	Sheet 6 of 8