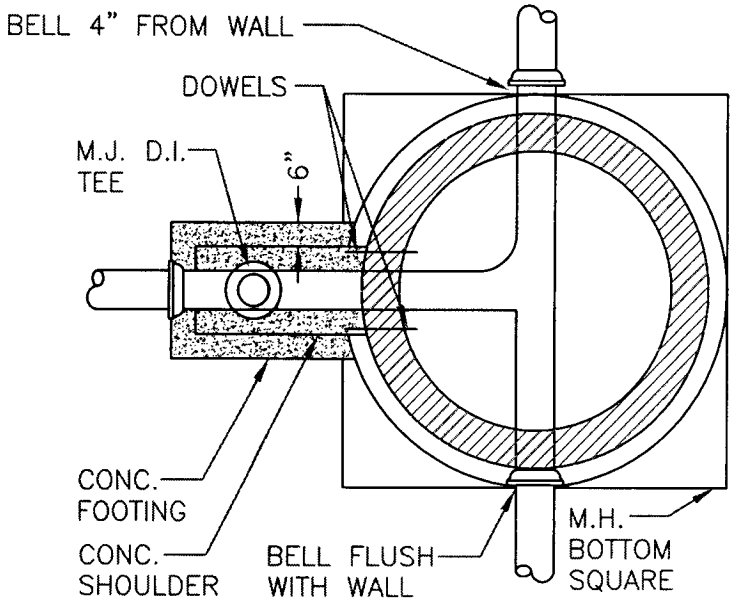

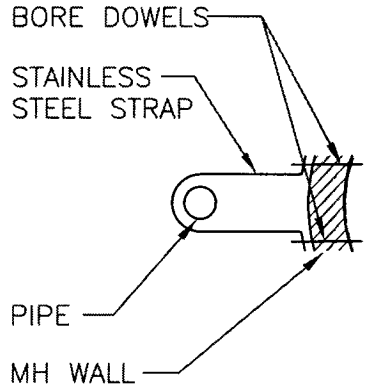

SECTION A–A

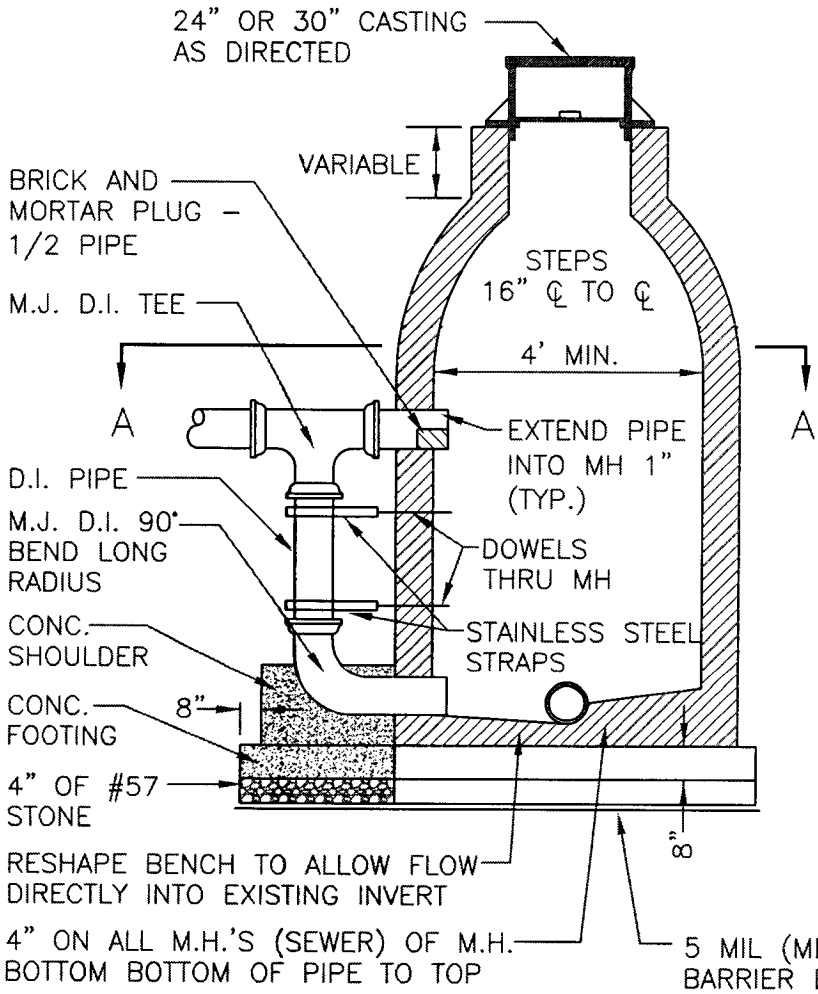

NOTES:

1. DI PIPE AND FITTINGS FOR DROP TO BE LINED WITH SEWPERCOAT, PROTECTO 401 OR APPROVED EQUAL.
2. ALL PIPE ENTRANCES INTO THE MANHOLES SHALL BE CORE BORED, MANHOLE BOOT AS PER ASTM C 923 ON EACH PIPE. VOIDS TO BE REPAIRED WIHT NON–SHRINK GROUT. GROUTED AREAS SHALL BE PAINTED WITH BITUMINOUS COATING.
3. DOWEL HOLES SHALL BE BORED, VOIDS SHALL BE REPAIRED WITH NON–SHRINK GROUT. GROUTED AREAS ON THE OUTSIDE OF THE MH WALL SHALL BE PAINTED WITH BITUMINOUS COATING.
4. ONE STAINLESS STEEL STRAP SHALL BE LOCATED 4" BELOW THE BELL OF THE TEE, ADDITIONAL STRAPS WILL BE PLACED AT 18" ON CENTER ON THE VERTICAL PIPE.

	CITY OF NORFOLK – DEPARTMENT OF UTILITIES STANDARD DETAILS	SCALE: NOT TO SCALE
DATE: 11/05	STANDARD D.I. DROP CONNECTION FOR BRICK EXISTING MANHOLE	DRAWING NO. CS 1