REQUIREMENTS:

1. MANHOLE SHALL MEET ALL REQUIREMENTS OF ASTM C478.

2. CONCRETE SHALL BE 4000 PSI COMPRESSIVE STRENGTH MINIMUM.

3. REINFORCING FABRIC SHALL MEET ASTM A185.

4. BASES SHALL BE EXTENDED MONOLITHIC TYPE.

5. MAX. HEIGHT FOR 48" M.H. SHALL NOT EXCEED 12'. WHEN THE MANHOLE IS OVER 12' DEEP, THE BOTTOM 6' (MINIMUM) SHALL BE 60" IN DIAMETER.

6. ALL MANHOLE WALLS SHALL RECEIVE INSIDE APPLICATION OF SIKAGARD HI-BILT OR APPROVED EQUAL APPLIED IN ACCORDANCE WITH MANUFACTURERS SPEC.

7. JOINTS, LIFT HOLES & CHIPS TO BE POINTED WITH NONSHRINK GROUT AND COATED WITH SIKAGARD HI-BILT OR APPROVED EQUAL ON INSIDE WALL, AND PAINTED WITH BITUMINOUS COATING ON OUTSIDE WALL.

8. USE NEOPRENE SEAL MFG. TO ASTM C443, (AS MFG. BY N.P.S.C. NASHUA, N.H.) OR APPROVED EQUAL.

9. BUTYL-TITE JOINT SEALANT SHALL MEET ALL REQUIREMENTS OF ASTM C443 OR APPROVED EQUAL.

10. MANHOLE STEPS SHALL BE AS PER CITY STANDARD CS 8A

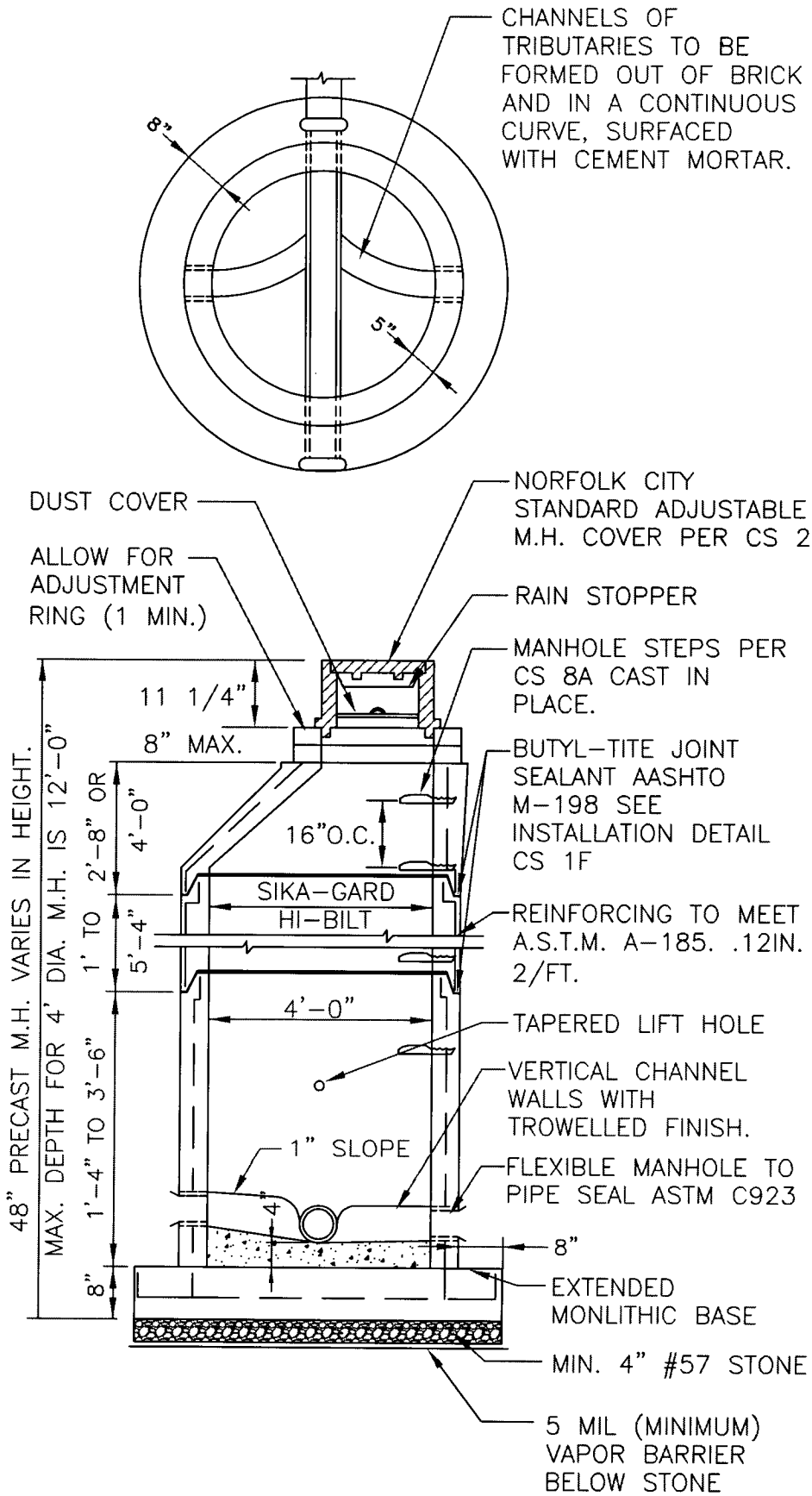

	CITY OF NORFOLK – DEPARTMENT OF UTILITIES STANDARD DETAILS	SCALE: NOT TO SCALE
DATE: 05/06	STANDARD PRECAST SEWER MANHOLE	DRAWING NO. CS 1E