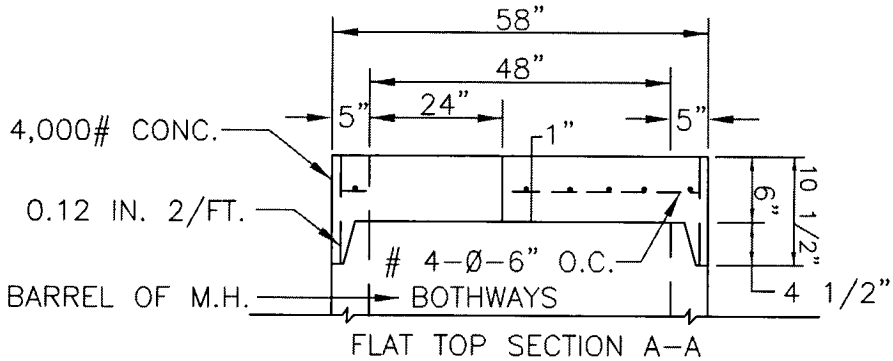

FLAT TOP SECTION A-A

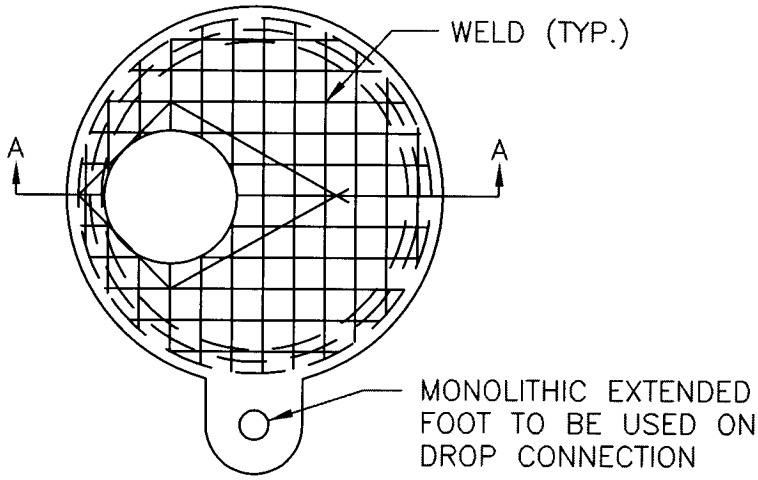

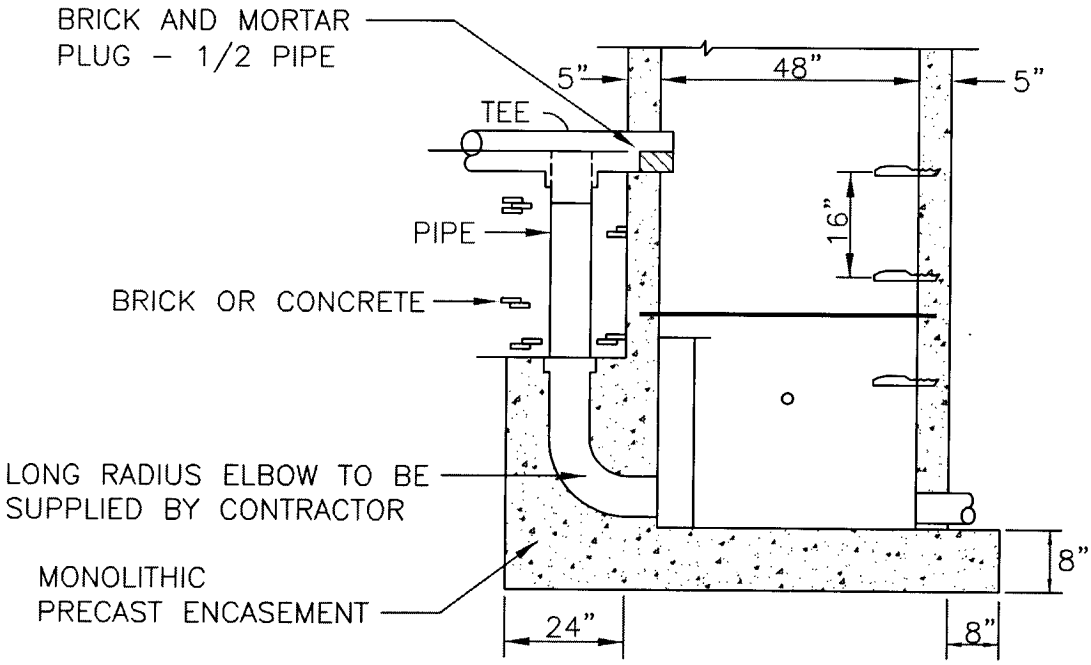

	CITY OF NORFOLK - DEPARTMENT OF UTILITIES STANDARD DETAILS	SCALE: NOT TO SCALE
DATE: 07/06	STANDARD PRECAST DROP MANHOLE	DRAWING NO. CS 1G