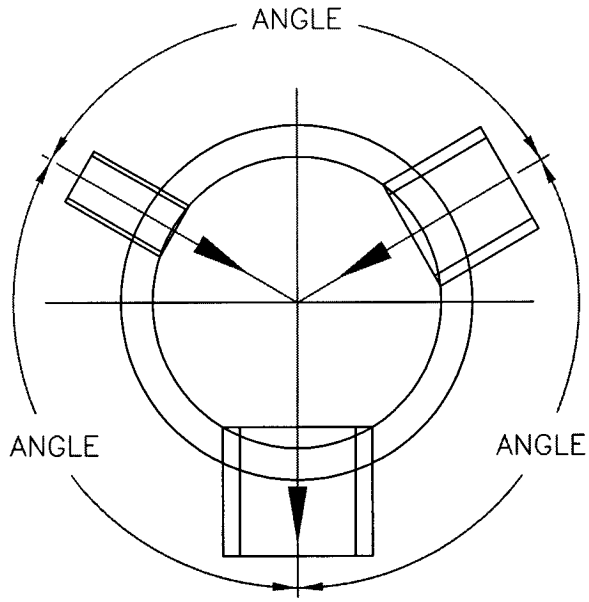

NOMINAL PIPE SIZE	48" DIAMETER MANHOLE					
	12"	15"	18"	21"	24"	27"
12"	59°	55°	70°	76°	80°	87°
15"		70°	75°	80°	85°	92°
18"			81°	87°	90°	98°
21"				93°	96°	105°
24"					100°	107°
27"						114°

NOMINAL PIPE SIZE	60" DIAMETER MANHOLE									
	12"	15"	18"	21"	24"	27"	30"	33"	36"	42"
12"	47°	50°	55°	60°	62°	66°	72°	78°	82°	105°
15"		55°	60°	63°	66°	71°	76°	81°	85°	110°
18"			63°	68°	70°	75°	80°	85°	90°	112°
21"				72°	75°	80°	85°	90°	95°	115°
24"					77°	81°	87°	95°	100°	118°
27"						85°	91°	97°	102°	125°
30"							95°	102°	105°	128°
33"								108°	110°	133°
36"									115°	140°
42"										160°

NOTES:

1. THE ABOVE ANGLES ARE TO BE MAINTAINED FOR THE STRUCTURAL INTEGRITY OF THE MANHOLES. SMALLER ANGLES MAY BE ALLOWED WITH PRIOR APPROVAL FROM THE DEPARTMENT.

2. FOR LARGER PIPE SIZES AND LARGER MANHOLES, SUBMIT DESIGN CALCULATIONS AND CERTIFICATION FROM THE PRECAST MANHOLE MANUFACTURER.

	CITY OF NORFOLK – DEPARTMENT OF UTILITIES STANDARD DETAILS	SCALE: NOT TO SCALE
DATE: 11/05	ALLOWABLE ANGLES FOR PRECAST MANHOLES	DRAWING NO. CS 50