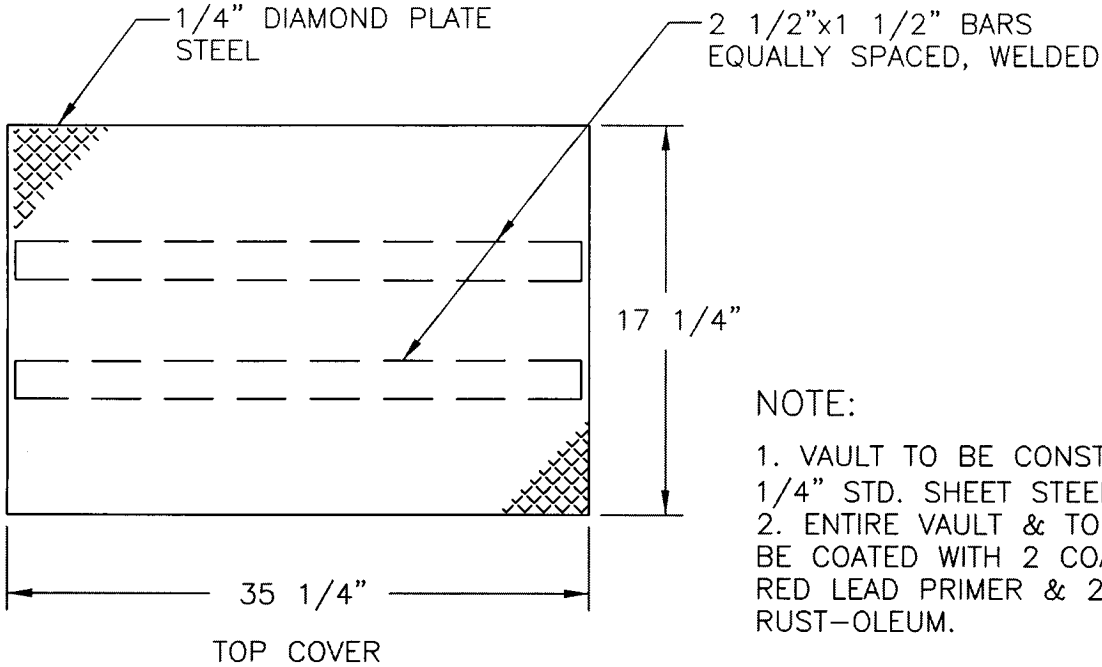

TOP COVER

NOTE:

1. VAULT TO BE CONSTRUCTED OF 1/4" STD. SHEET STEEL.
2. ENTIRE VAULT & TOP TO BE COATED WITH 2 COATS RED LEAD PRIMER & 2 COATS RUST-OLEUM.

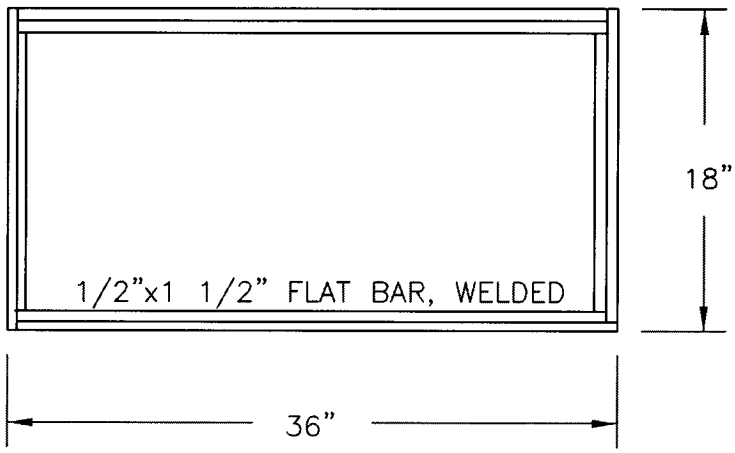

TOP VIEW

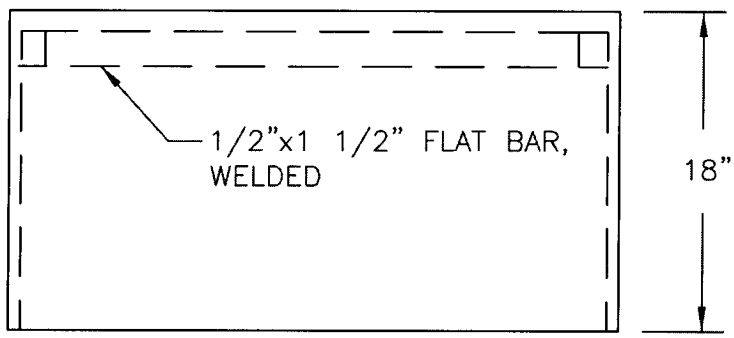

SIDE VIEW

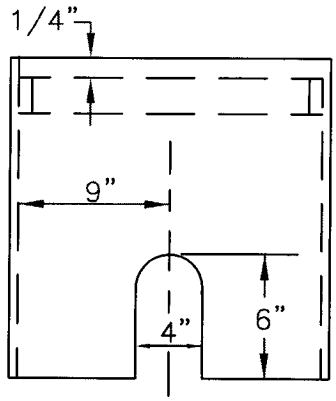

END VIEW

	CITY OF NORFOLK – DEPARTMENT OF UTILITIES STANDARD DETAILS	SCALE: NOT TO SCALE
DATE: 07/06	METER VAULT & TOP, SMALL	DRAWING NO. CS 7G