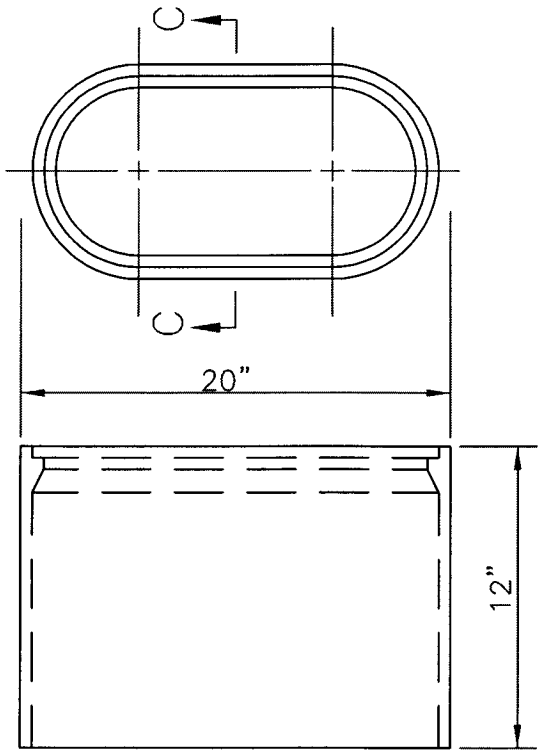

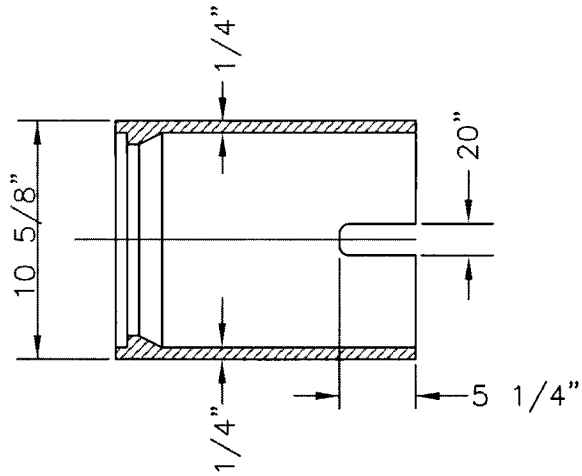

SECTION C–C

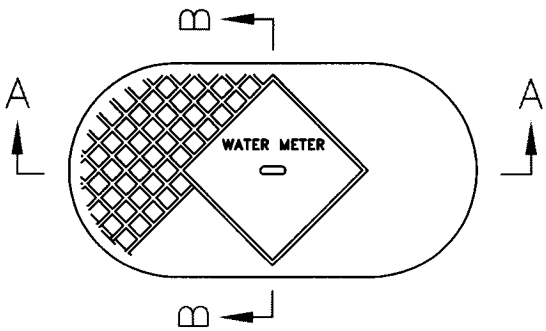

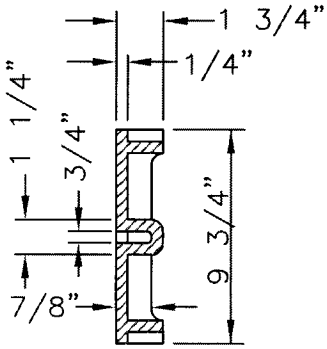

SECTION B–B

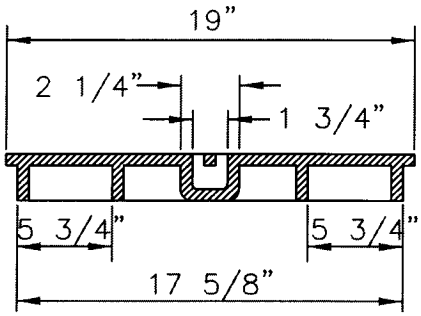

SECTION A–A

GENERAL SPECIFICATIONS:

1. CAST IRON SHALL BE 35,000 P.S.I.
2. ASTM A–48 CLASS 35B

	CITY OF NORFOLK – DEPARTMENT OF UTILITIES STANDARD DETAILS	SCALE: NOT TO SCALE
DATE: 05/06	WATER METER BOX & COVER DETAIL	DRAWING NO. CS 7H