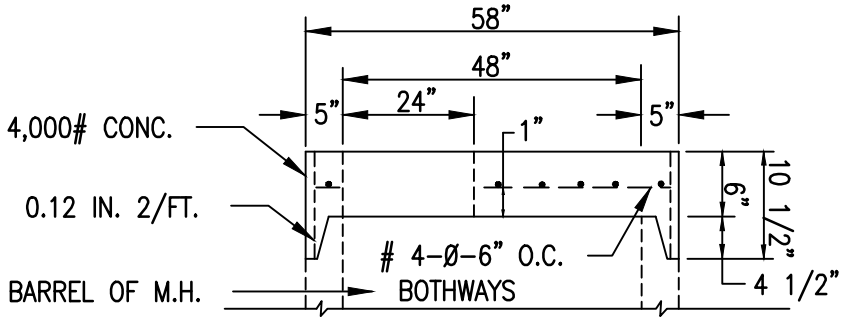

FLAT TOP SECTION A-A

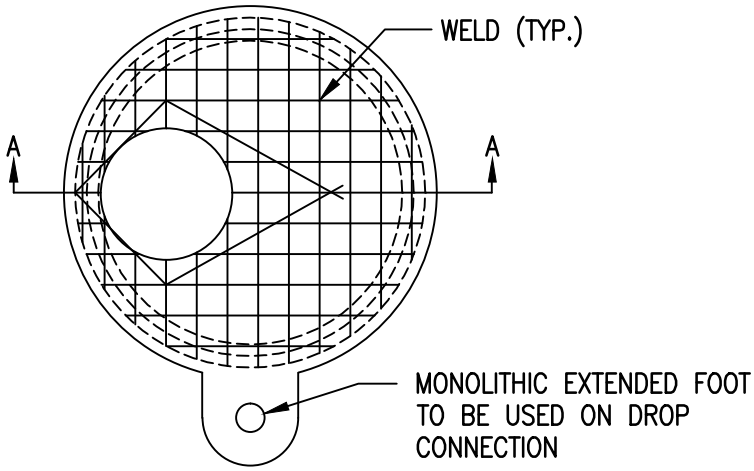

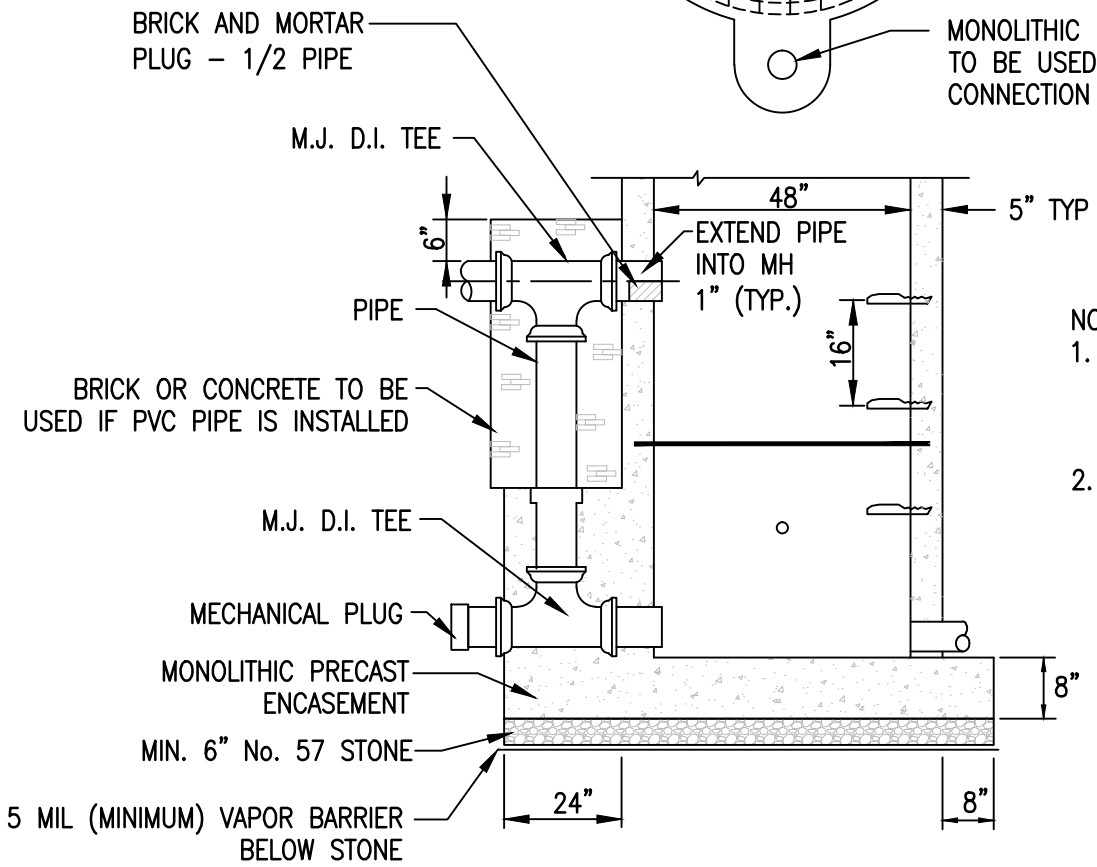

NOTES:

1. PLACEMENT OF DROP NOT TO CONFLICT WITH MANHOLE STEPS.
2. PROVIDE FLEXIBLE BOOT CONNECTION.

	CITY OF NORFOLK - DEPARTMENT OF UTILITIES STANDARD DETAILS	SCALE: NOT TO SCALE
DATE: 06/12	MODIFIED PRECAST SEWER DROP MANHOLE	DRAWING NO. CS 05A