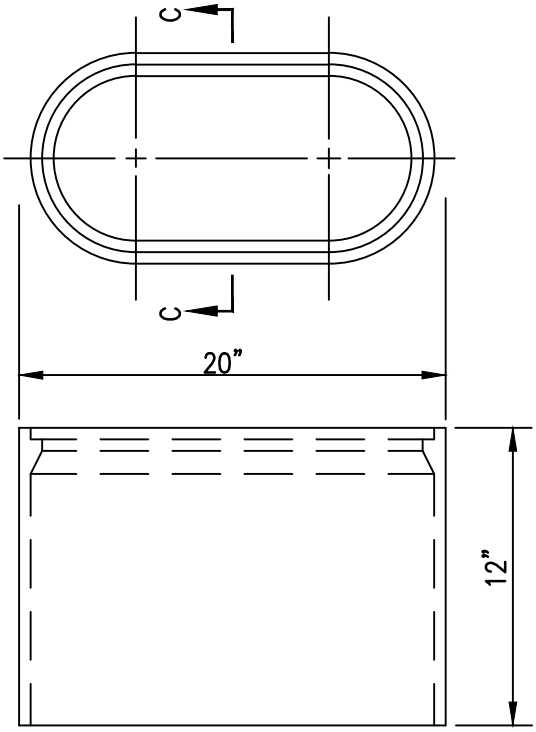


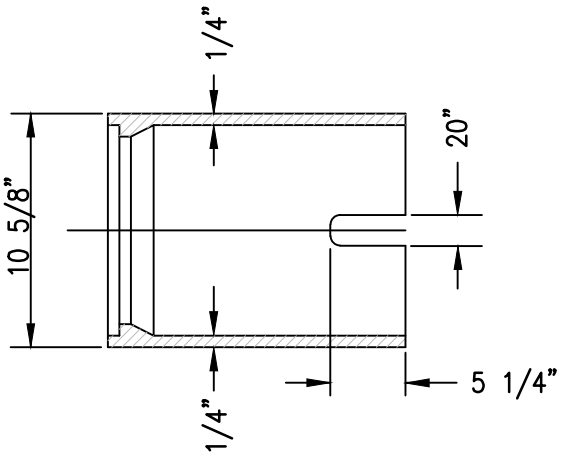


SECTION C–C

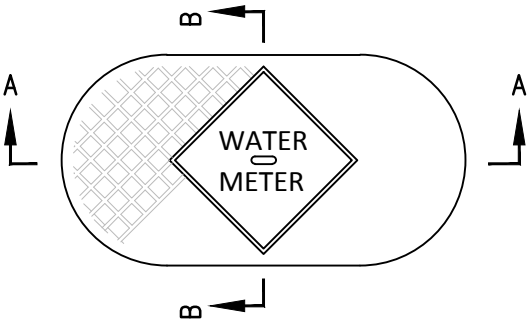


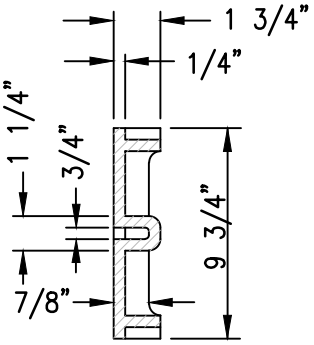


SECTION B–B

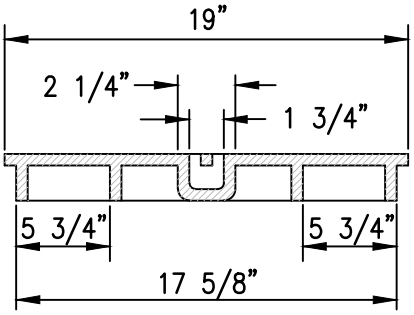


SECTION A–A

## GENERAL SPECIFICATIONS:

1. CAST IRON SHALL BE 35,000 P.S.I.
2. ASTM A–48 CLASS 35B

| | | |
|---|---|---|
| | CITY OF NORFOLK – DEPARTMENT OF UTILITIES<br>STANDARD DETAILS | SCALE:<br>NOT TO SCALE |
| DATE: 03/07 | WATER METER BOX & COVER | DRAWING NO.<br>CW 02 |