NOTES:

1. LETTER ON COVER SHALL BE "S" WHEN USED IN SAN. SEWER SYSTEM AND "W" WHEN USED IN WATER SYSTEM.

2. RISER FOR VALVE BOX SHALL MATCH TYPE OF PIPE USED FOR MAIN.

GENERAL SPECIFICATIONS

1. CAST IRON SHALL BE 35,000 PSI

2. ASTM A48 CLASS 35B

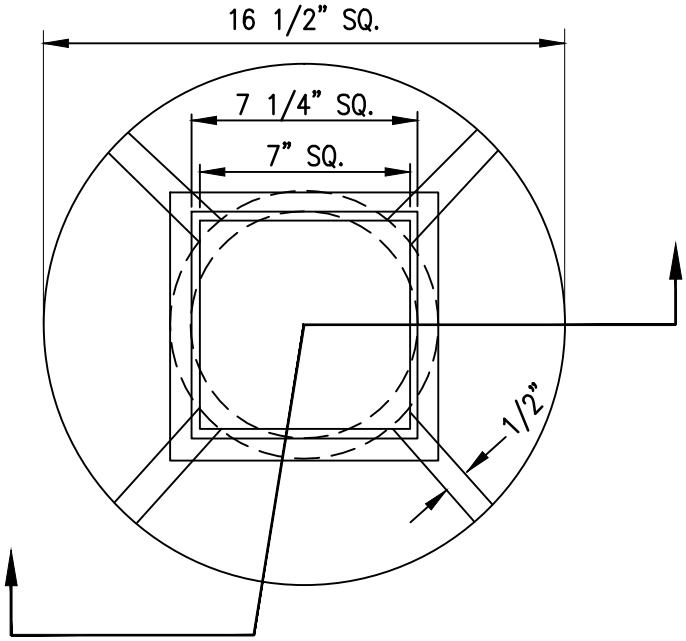

PLAN VIEW

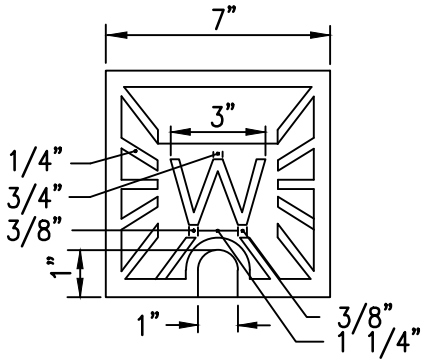

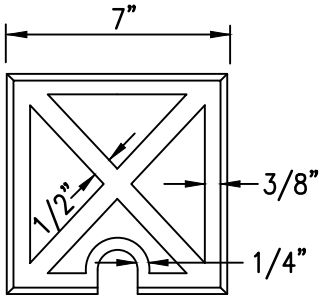

PLAN VIEW VALVE LID

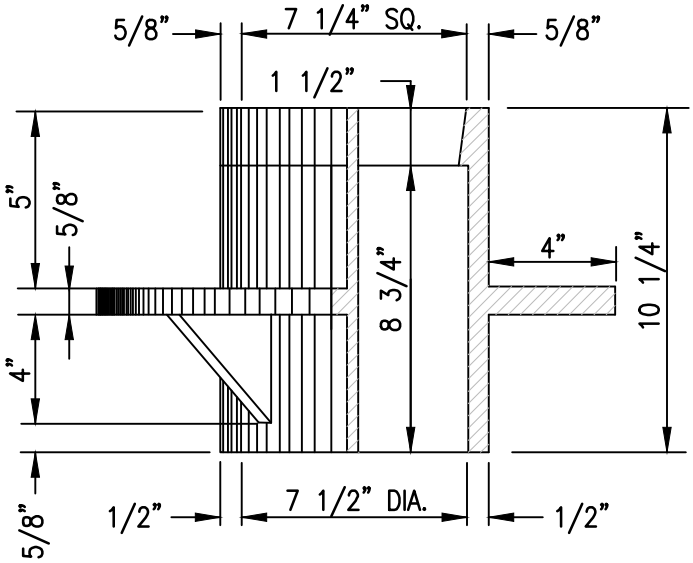

PROFILE VALVE BOX

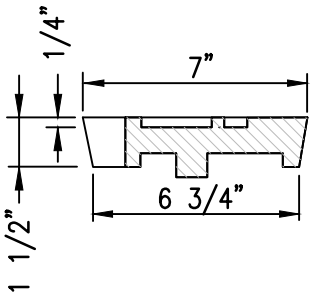

PROFILE VALVE LID

	CITY OF NORFOLK – DEPARTMENT OF UTILITIES STANDARD DETAILS	SCALE: NOT TO SCALE
DATE: 03/07	SMALL GATE VALVE BOX FOR MAINS UP TO 6 INCHES	DRAWING NO. CWS 02