NCDS2014.06

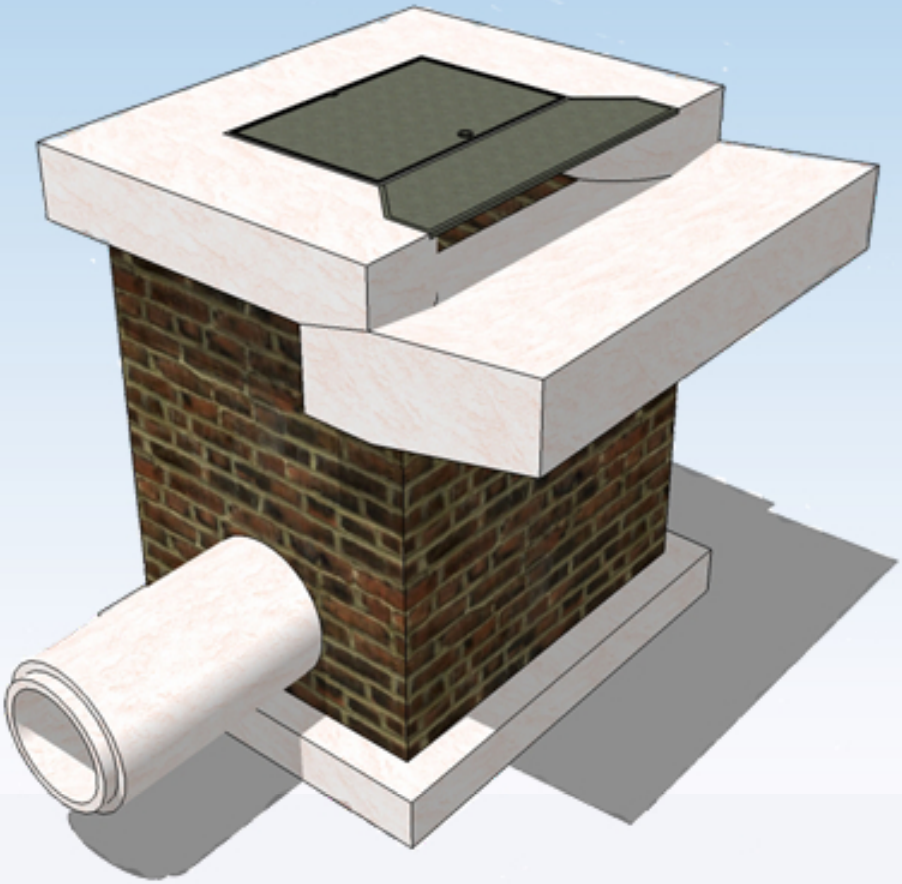

Norfolk City Design Standards

http://www.norfolk.gov/index.aspx?NID=819

The City of Norfolk, Department of Public Works, provides a copy of this AutoCAD 2013 drawing file of the City's design standards, as a public service. It is, therefore, strictly prohibited to sell or use this file for profit or personal enrichment.

This compilation of the Norfolk City Design Standards is subject to improvements and updates. A current copy is on file and maintained by the Department of Public Works, Design Division, Engineering Bureau. If you are not certain whether or not this copy is current, you may access the Pubic Works web site at http://www.norfolk.gov/publicworks/design.asp. You may contact the Design Division at 664-4602 between 8:30 a.m. and 5:00 p.m., Monday through Friday.

Because copies of this file exist in the public domain and may have a wide and varied circulation, the City of Norfolk or its agent(s) does not imply nor guarantee the integrity of this file. By the acceptance and/or use of this file, the end user absolves the City of Norfolk and/or its agent(s) of all liability for any harm or damage resulting from its use or the application of its contents.

DESIGN STANDARDS INDEX

City of Norfolk Department of Public Works

(Sheet 1 of 2)

NORFOLK DESIGN STANDARDS (NCSD 2014.06)

Designation	Description
HS-101	NOT USED
HS-102	NOT USED
HS-103	STANDARD GRATE INLET
HS-104	STANDARD MANHOLE
HS-105	NOT USED
HS-106	FABRIC JOINT WRAP
HS-107	NOT USED
HS-201	NOT USED
HS-202	7" CURB AND GUTTER
HS-203	METHOD OF SETTING GRANITE CURB
HS-204	NOT USED
HS-205	STANDARD VALLEY GUTTER
HS-206	NOT USED
HS-207	STANDARD RESIDENTIAL DRIVEWAY APRON
HS-208	ADA VARIATION OF DRIVEWAY APRON
HS-209	STANDARD RESIDENTIAL DRIVEWAY W/O CURB AND GUTTER
HS-210	COMMERCIAL BRICK DRIVEWAY
HS-211	NOT USED
HS-212	STANDARD COMMERCIAL DRIVEWAY APRON
HS-301	STANDARD PAVEMENT REPLACEMENT - ASPHALT OVER STONE
HS-302	STANDARD PAVEMENT REPLACEMENT - ASPHALT OVER CONCRETE
HS-303	STANDARD PAVEMENT REPLACEMENT CONCRETE
HS-304	CONCRETE PAVEMENT JOINT DETAIL
HS-601	STANDARD GRASS PLANTING DETAIL
HS-602	STANDARD TREE PROTECTION DETAIL
HS-603	RECYCLED RUBBER WHEEL STOP
HS-604	STANDARD CITY CONSTRUCTION SIGN - SMALL
HS-605	CONSTRUCTION SIGN INSTALLATION - SMALL
HS-606	STANDARD CITY CONSTRUCTION SIGN - LARGE
HS-607	CONSTRUCTION SIGN INSTALLATION - LARGE

DESIGN STANDARDS INDEX

City of Norfolk Department of Public Works

(Sheet 2 of 2)

HRPDC REGIONAL CONSTRUCTION STANDARDS

Designation	Description
CI_01	24" CURB & GUTTER
CI_03	STANDARD MEDIAN CURB
CI_04	MOUNTABLE CURB
CI_09	SIDEWALK DETAIL WITH MINIMUM 5ft WIDTH
CI_10	ROLL TOP CURB AND CUTTER
DS_01	STORM DRAIN CASTING & COVER (30")
DS_03	CURB INLET/CATCH BASIN FRAME AND COVER
DS_04	CURB INLET/CATCH BASIN
EW_01	PIPE BEDDING DETAILS
EW_01_2	PIPE BEDDING DETAILS
EW_02_1	PAYMENT LIMITS TRENCH EXCAVATION AND BACKFILL
EW_02_2	PAYMENT LIMITS TRENCH EXCAVATION AND BACKFILL
EW_03_1	TRENCH WIDTH DETAIL FOR PAYMENT OF CONTINGENT ITEMS
EW_03_2	TRENCH WIDTH DETAIL FOR PAYMENT OF CONTINGENT ITEMS
EW_04_1	TYPICAL TRENCH DETAIL FOR HDPE (TYPE S) STORM DRAIN PIPE
EW_04_2	TYPICAL TRENCH DETAIL FOR HDPE (TYPE S) STORM DRAIN PIPE

CITY OF NORFOLK

DEPT. OF PUBLIC WORKS

DESCRIPTION

STANDARD GRATE INLET

SCALE: NOT TO SCALE

EDITION: NCDS2014.06

REVISED: JUNE 2014

DESIGNATION: HS-103

CAST IRON GRATE

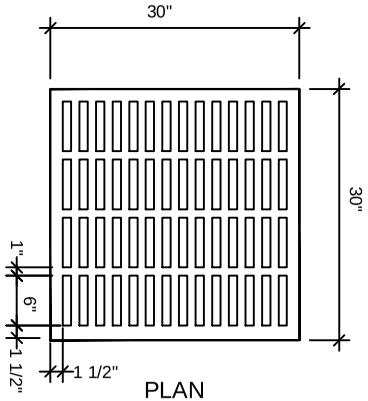

PLAN

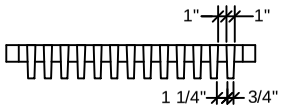

SECTION

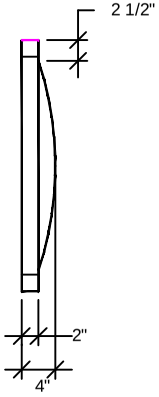

ELEVATION

NOTES:

1. MORTAR PARGE BRICK INSIDE AND OUT (MIN. 1/2" THICK). (ASTM C270, TYPE N)
2. WRAP CONNECTION BETWEEN PIPE AND STRUCTURE WITH GEOTEXTILE FABRIC, AS PER HS-106.
3. INVERT OF STRUCTURE TO BE SHAPED IN ACCORDANCE WITH VDOT STANDARD IS-1.
4. CONCRETE COVER AND GRATE ARE TO BE FURNISHED AS A SINGLE UNIT.
5. GRATE BARS SHALL BE INSTALLED PARALLEL TO DITCH FLOW.
6. PRECAST STRUCTURE MAY BE USED UPON APPROVAL OF THE ENGINEER.

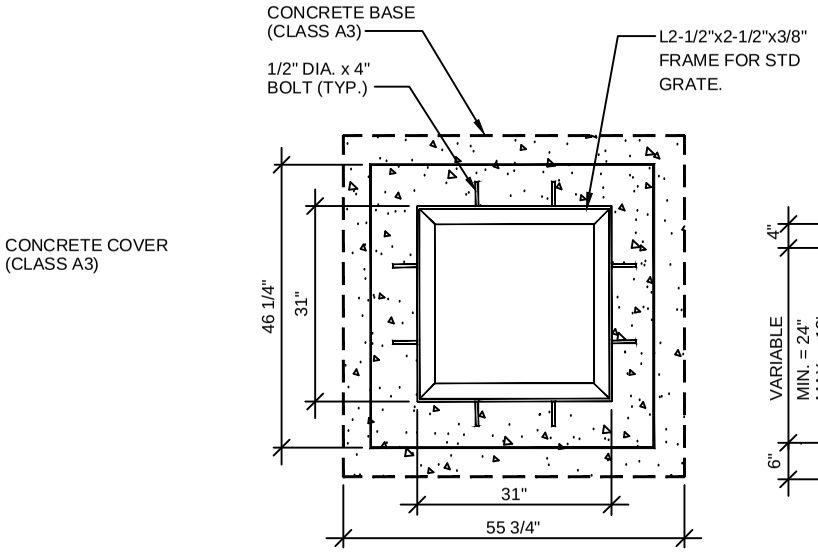

PLAN

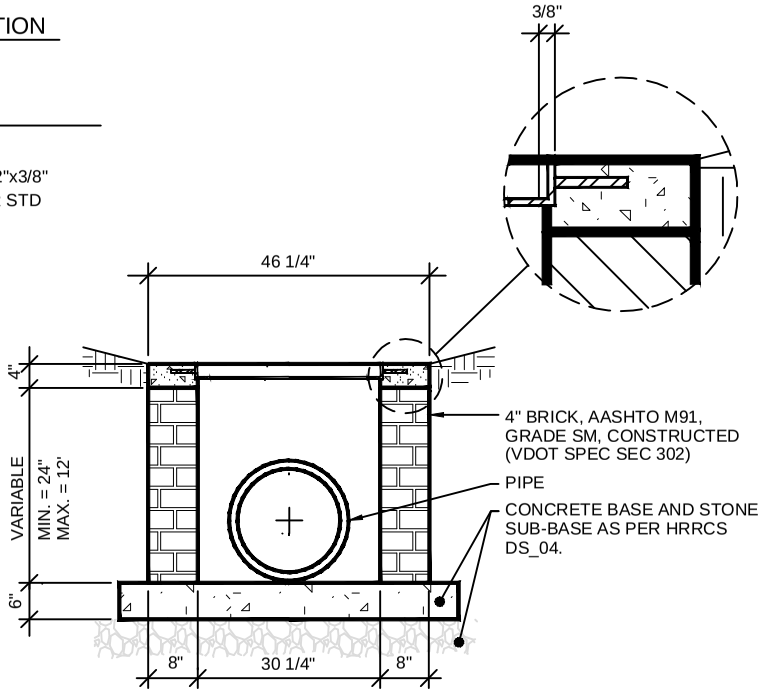

SECTION

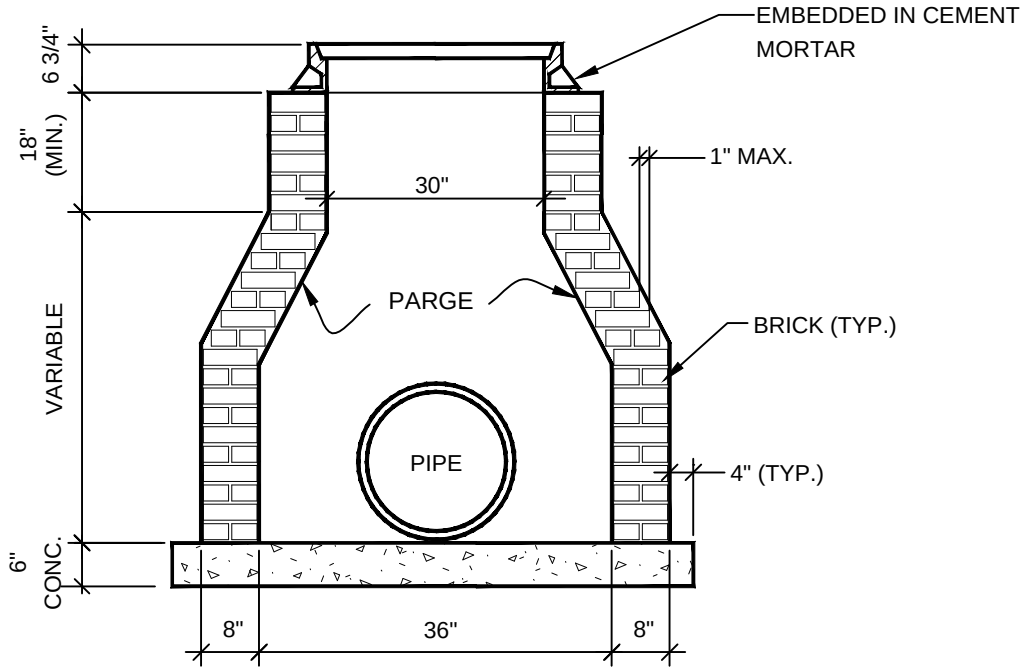

SECTION A - A

NOTES:

1. 4" BRICK, AASHTO M91, GRADE SM, SHALL BE LAID IN CEMENT MORTAR WITH SHOVED JOINTS NOT TO EXCEED 3/8" THICK. INTERIOR FACE SHALL BE PLASTERED WITH MIN. 1/2" THICK CEMENT MORTAR, TYPE N.

2. INVERT SHALL BE SHAPED IN ACCORDANCE WITH VDOT STANDARD IS-1

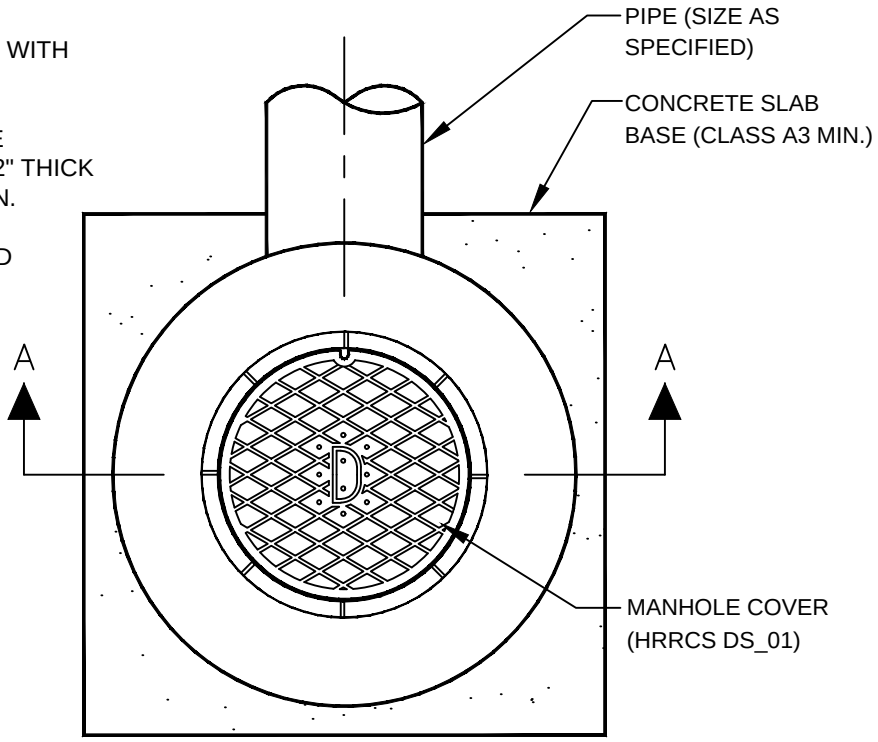

PLAN

CITY OF NORFOLK DEPT. OF PUBLIC WORKS	DESCRIPTION			DESIGNATION
	STANDARD MANHOLE			HS-104
	SCALE NOT TO SCALE	EDITION NCDS2014.06	REVISED JUNE 2014	

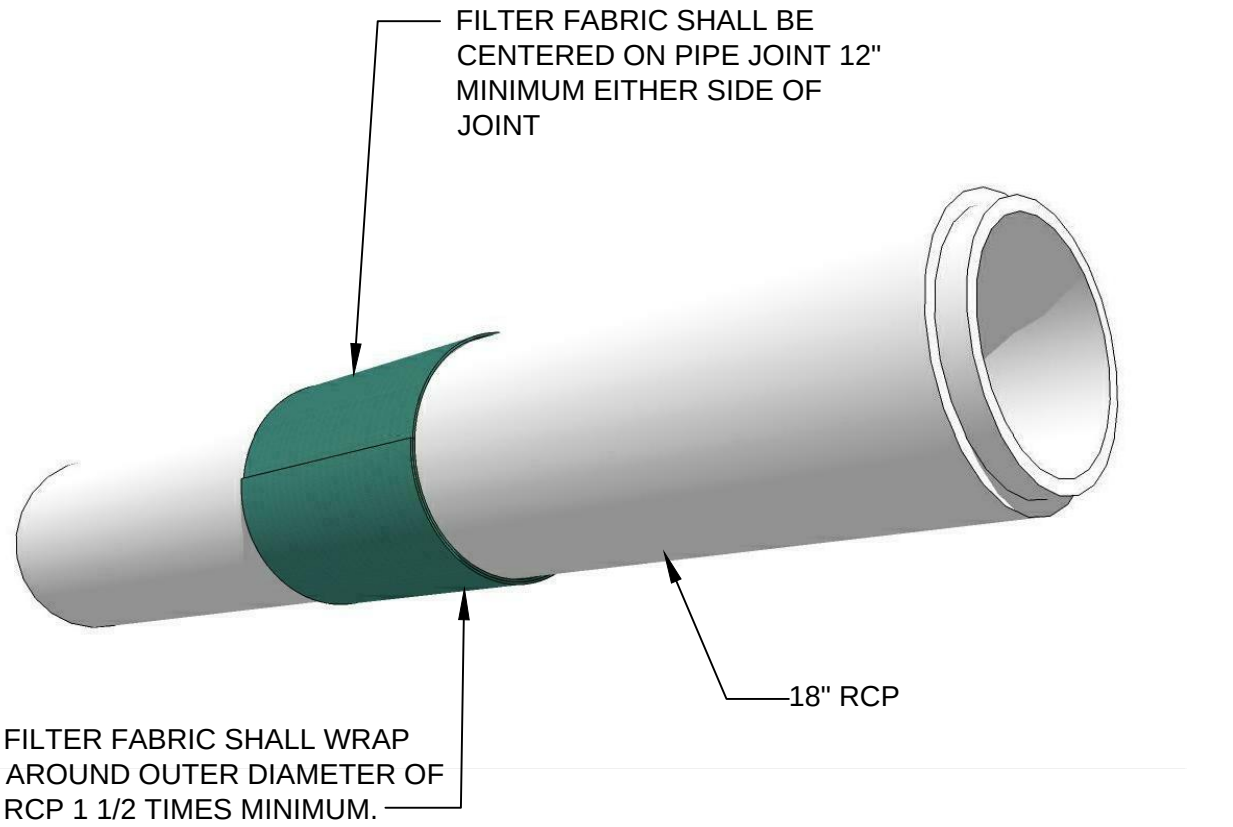

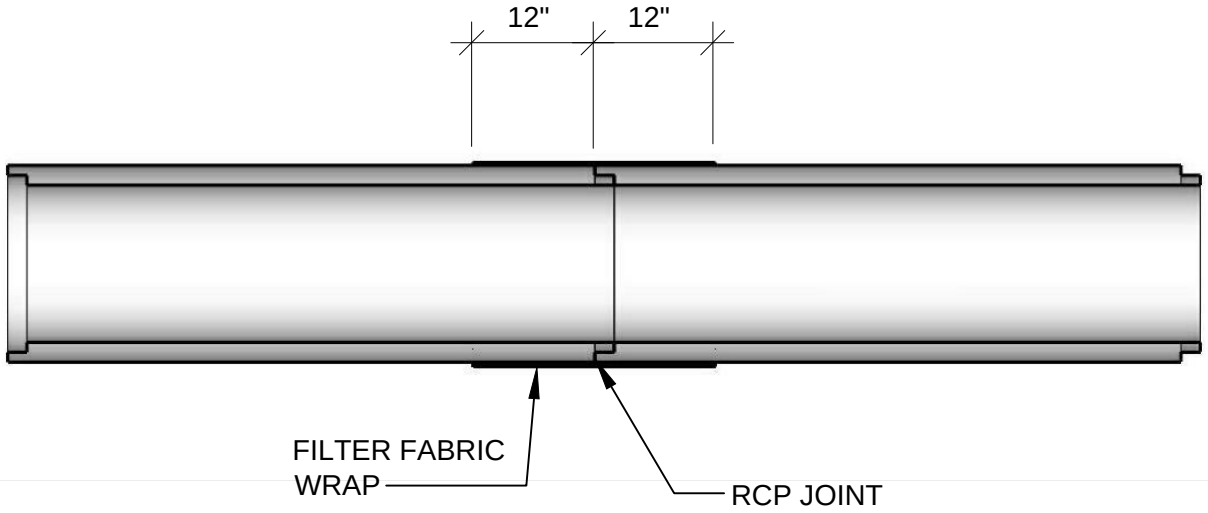

SECTION

NOTE

FILTER FABRIC SHALL BE NONWOVEN GEOTEXTILE CONSTRUCTION FABRIC (ACF ENVIRONMENTAL #35)

CITY OF NORFOLK DEPT. OF PUBLIC WORKS	DESCRIPTION FABRIC JOINT WRAP			DESIGNATION HS-106
	SCALE NOT TO SCALE	EDITION NCDS2014.06	REVISED MARCH 2013	

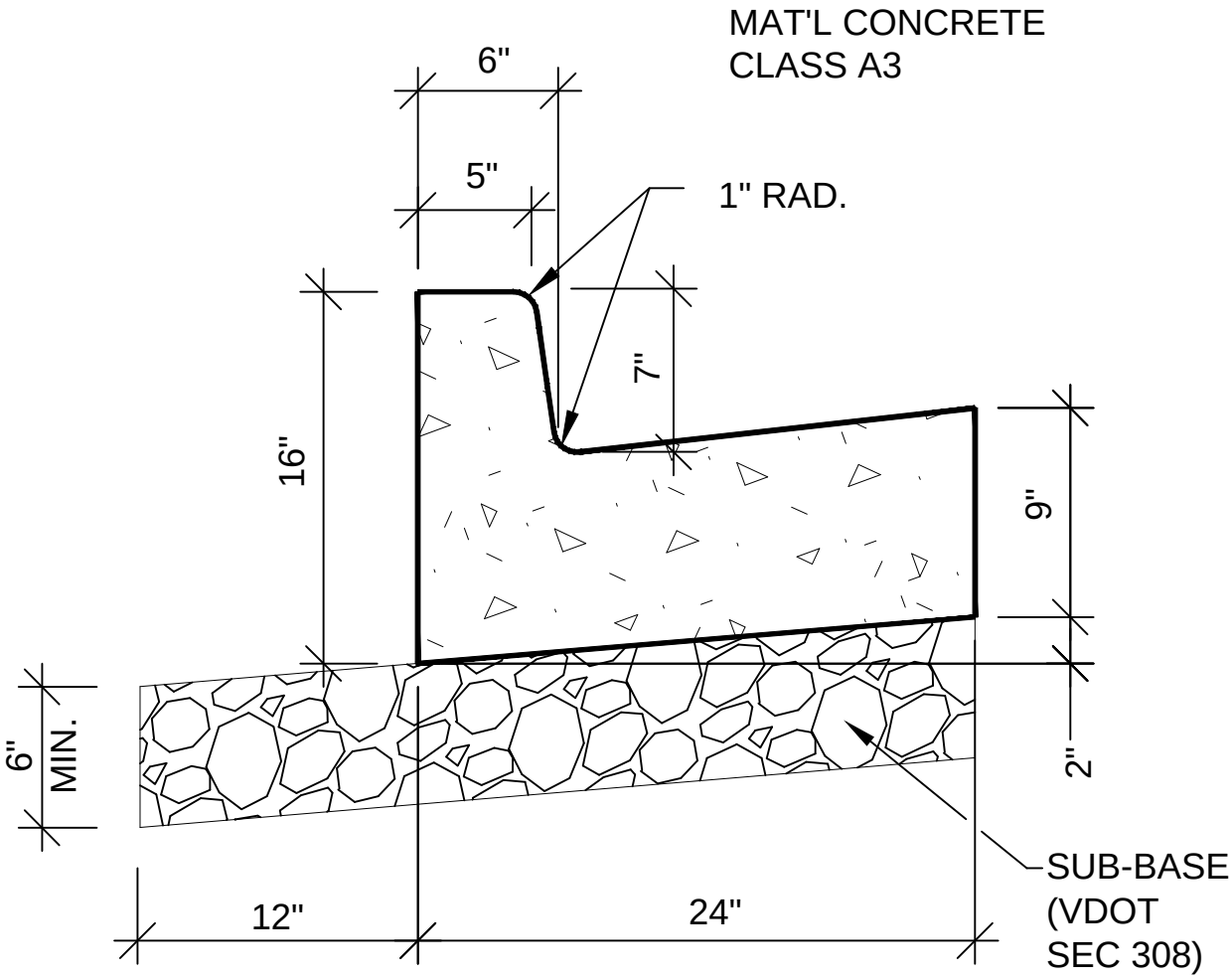

CITY OF NORFOLK DEPT. OF PUBLIC WORKS	DESCRIPTION			DESIGNATION
	7" CURB AND GUTTER			HS-202
	SCALE NOT TO SCALE	EDITION NCDS2014.06	REVISED JUN. 2014	

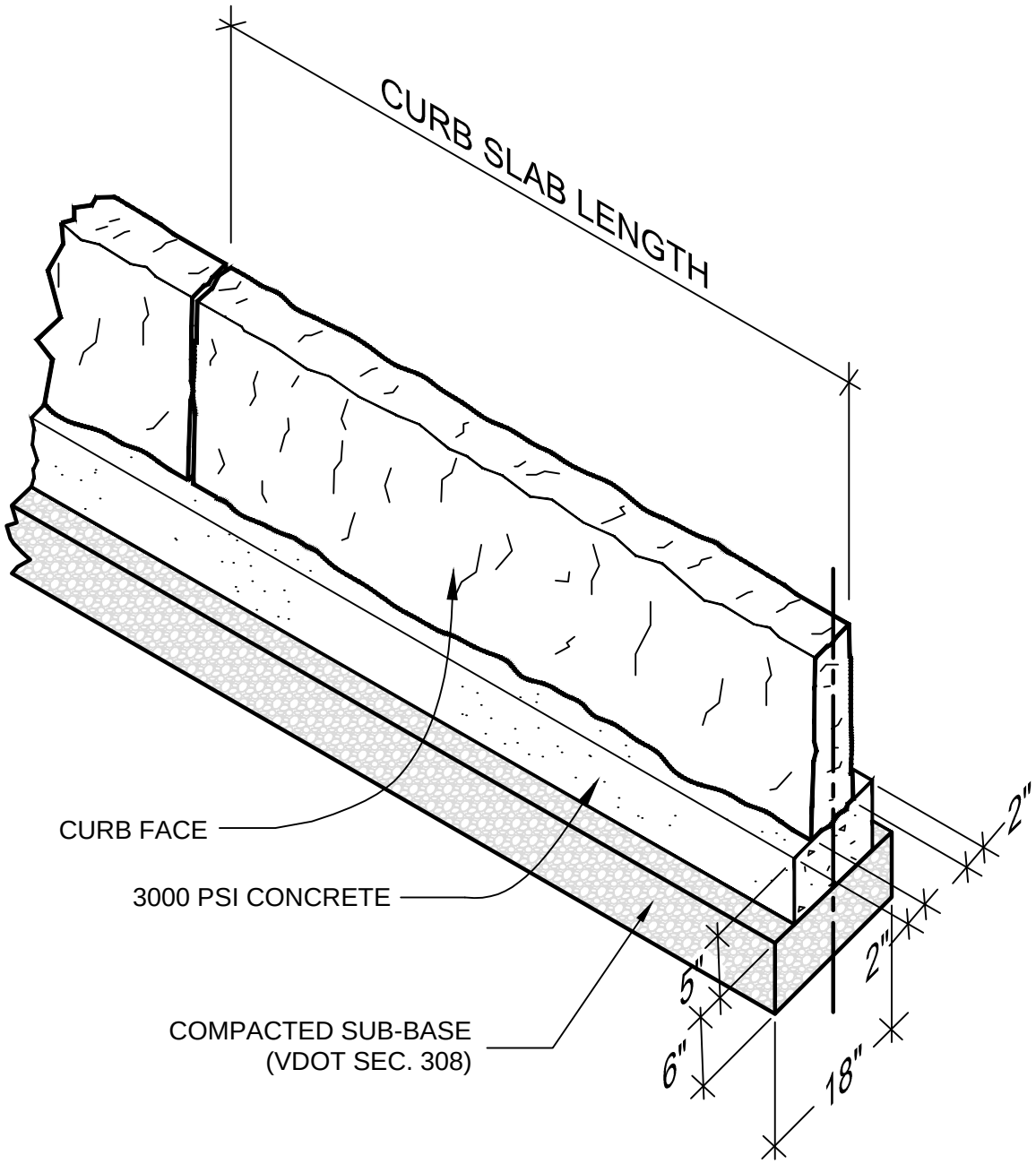

CITY OF NORFOLK DEPT. OF PUBLIC WORKS	DESCRIPTION			DESIGNATION
	METHOD OF SETTING GRANITE CURB			HS-203
	SCALE NOT TO SCALE	EDITION NCDS2014.06	REVISED JUNE 2014	

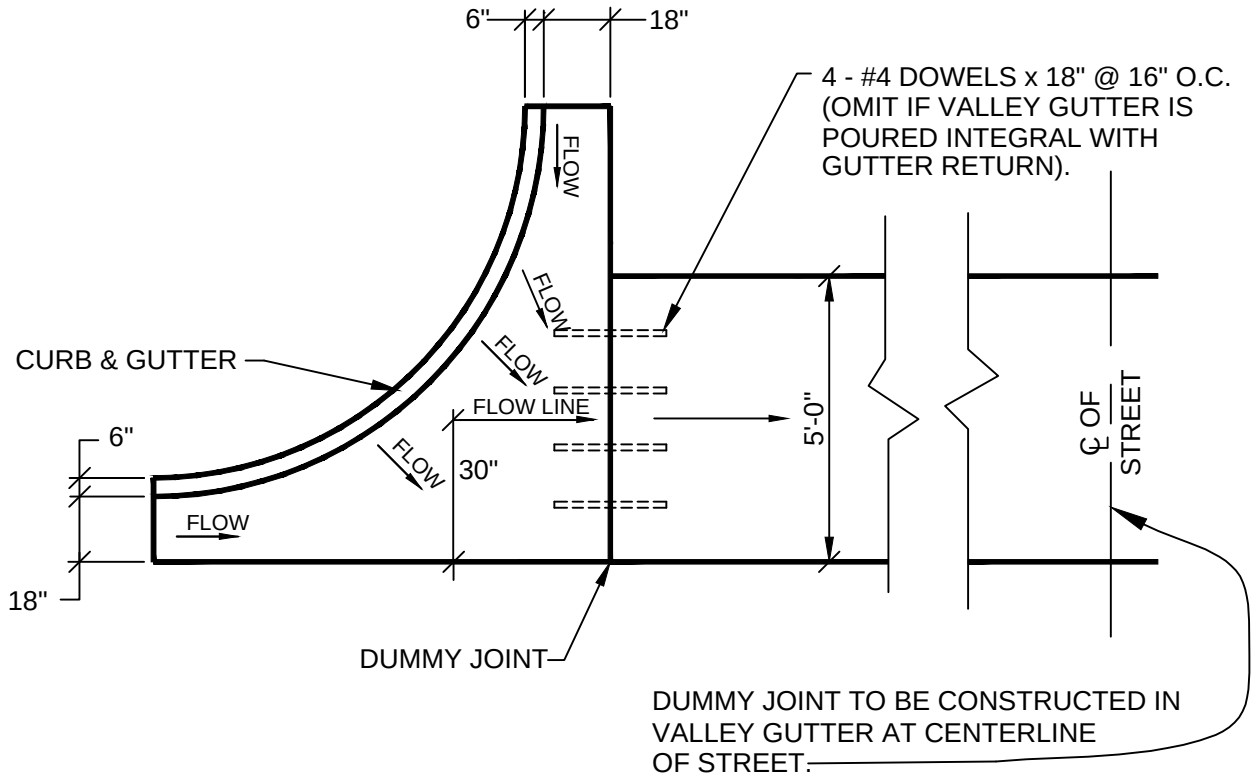

PLAN VIEW

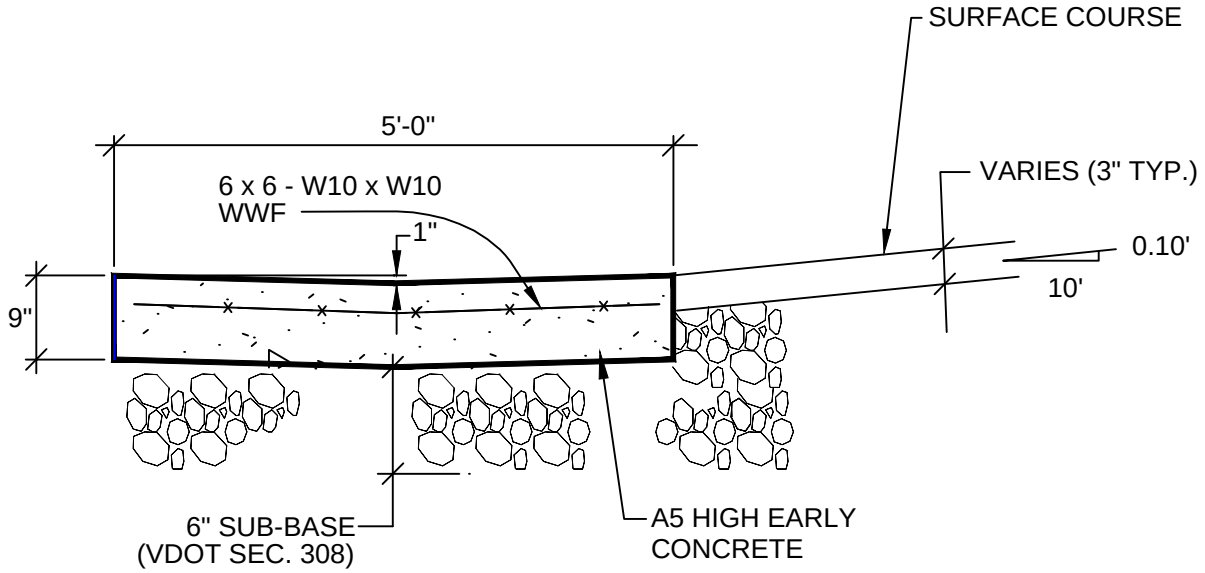

SECTION AT ℄

CITY OF NORFOLK DEPT. OF PUBLIC WORKS	DESCRIPTION STANDARD VALLEY GUTTER			DESIGNATION HS-205
	SCALE NOT TO SCALE	EDITION NCDS2014.06	REVISED JUNE 2014	

NOTES

1. APRONS SHALL BE CONSTRUCTED AT LEAST 3 FT. FROM ALL UTILITY POLES, FIRE HYDRANTS, TELEPHONE PEDESTALS, ETC.
2. APRON FLARES AND ANY OTHER PART OF THE DRIVEWAY SHALL NOT ENCROACH ONTO THE ADJACENT PROPERTY.
3. APRON SLOPES;
   RECOMMENDED: 1/2" : 1'
   NOT TO EXCEED: 1-1/4":1'
   NOT TO EXCEED: 1/4":1' ACROSS PEDESTRIAN CROSSING
4. ALL EXISTING CONCRETE TO BE SAW-CUT PRIOR TO DEMOLITION OR REMOVED TO NEAREST JOINT.
5. RESIDENTIAL DRIVEWAY APRONS SHALL BE 6" THICK OF CLASS A3 CONCRETE WITH 6" OF AGGREGATE BASE MATERIAL.
6. WHERE PROPOSED DRIVEWAY APRON ABUTS CONCRETE PAVEMENT, INSTALL 1/2" EXPANSION JOINTS. APRON SHALL BE MONOLITHIC POUR.

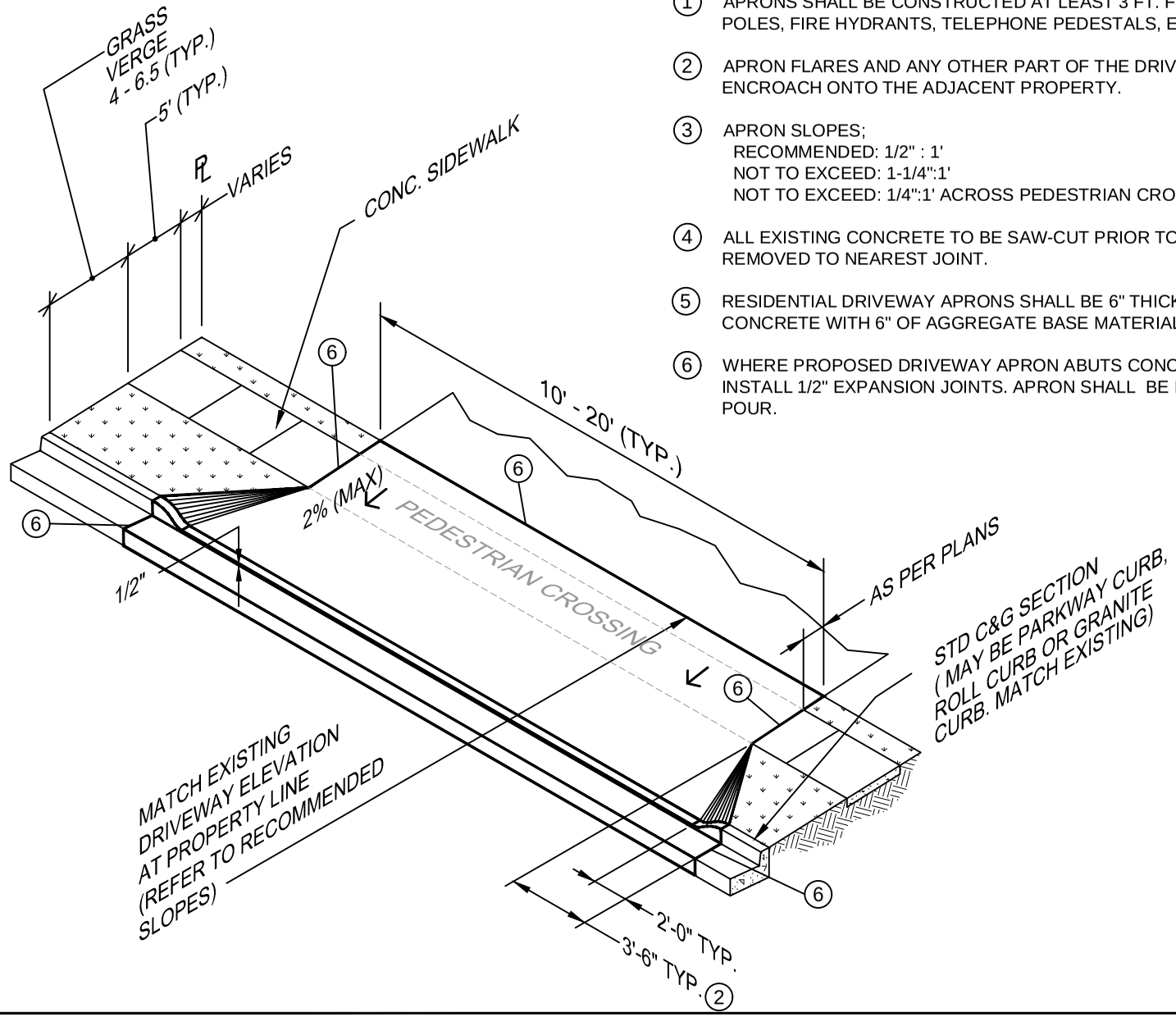

CITY OF NORFOLK
DEPT. OF PUBLIC WORKS

DESCRIPTION
STANDARD RESIDENTIAL DRIVEWAY APRON

SCALE
NOT TO SCALE

EDITION
NCDS2014.06

REVISED
JUNE 2014

DESIGNATION
HS-207

NOTES

1. APRONS SHALL BE CONSTRUCTED AT LEAST 3 FT. FROM ALL UTILITY POLES, FIRE HYDRANTS, TELEPHONE PEDESTALS, ETC.
2. PERMISSION FROM PROPERTY OWNER SHALL BE ACQUIRED BEFORE CONSTRUCTING THIS PORTION OF DRIVEWAY APRON.
3. APRON SLOPES; 1/4":1' THROUGH FIRST 3' (MIN.) AND 1.5":1' (MAX.) BEYOND TO SIDEWALK.
4. ALL EXISTING CONCRETE TO BE SAW-CUT PRIOR TO DEMOLITION OR REMOVED TO NEAREST JOINT.
5. RESIDENTIAL DRIVEWAY APRONS SHALL BE 6" THICK OF CLASS A3 CONCRETE WITH 6" OF AGGREGATE 6" THICK OF CLASS A3 .
6. WHERE PROPOSED DRIVEWAY APRON ABUTS CONCRETE PAVEMENT INSTALL 1/2" EXPANSION JOINTS. APRON SHALL BE A MONOLITHIC POUR.

CITY OF NORFOLK	DESCRIPTION			DESIGNATION
DEPT. OF PUBLIC WORKS	ADA VARIATION OF DRIVEWAY APRON			HS-208
	SCALE: NOT TO SCALE	EDITION: NCDS2014.06	REVISED: JUNE 2014	

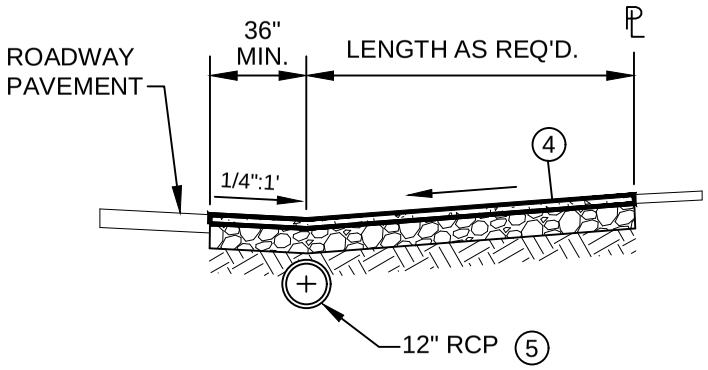

SECTION A - A

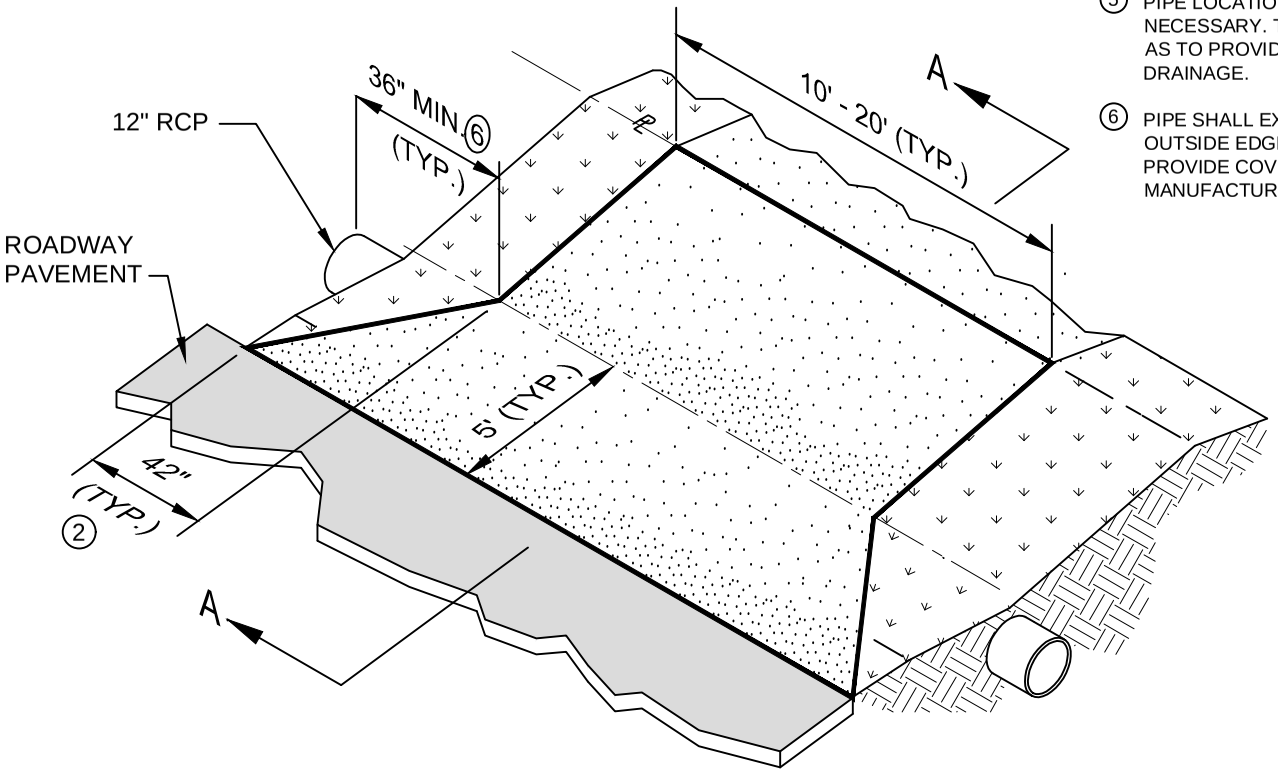

NOTES

1. APRONS SHALL BE CONSTRUCTED AT LEAST 3 FT. FROM ALL UTILITY POLES, FIRE HYDRANTS, TELEPHONE PEDESTALS, ETC.
2. APRON FLARES OR ANY OTHER PART OF THE DRIVEWAY APRON SHALL NOT ENCROACH ONTO THE ADJACENT PROPERTY.
3. APRON SLOPES:
   RECOMMENDED: 1/2": 1'
   NOT TO EXCEED: 1-1/4":1'
   NOT TO EXCEED: 1/4":1' ACROSS PEDESTRIAN CROSSING (WHERE APPLICABLE)
4. RESIDENTIAL DRIVEWAY APRONS SHALL BE 2" BITUMINOUS CONCRETE SURFACE MIX OVER 8" COMPACTED AGGREGATE BASE OR 6" OF CLASS A3 CONCRETE, MONOLITHICALLY POURED.
5. PIPE LOCATION MAY VARY WITHIN THE R.O.W. AS NECESSARY. THE PIPE SHALL BE INSTALLED SO AS TO PROVIDE AND MAINTAIN POSITIVE DRAINAGE.
6. PIPE SHALL EXTEND 3' (MIN.) BEYOND FARTHEST OUTSIDE EDGE OF ENTRANCE AT CROSSING. PROVIDE COVER AS SPECIFIED BY MANUFACTURER.

CITY OF NORFOLK
DEPT. OF PUBLIC WORKS

DESCRIPTION
STANDARD RESIDENTIAL DRIVEWAY APRON
WITHOUT CURB AND GUTTER

SCALE
NOT TO SCALE

EDITION
NCDS2014.06

REVISED
DECEMBER 2007

DESIGNATION
HS-209

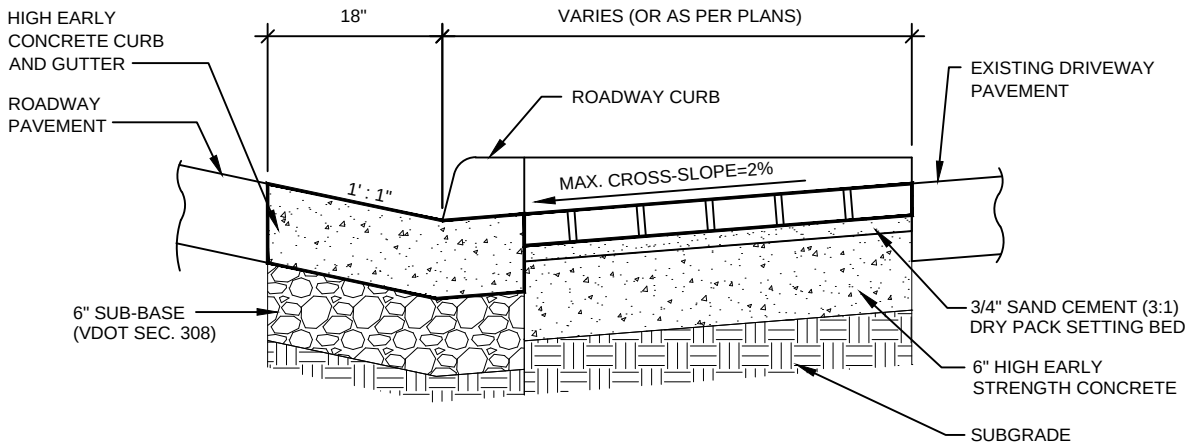

SECTION A - A

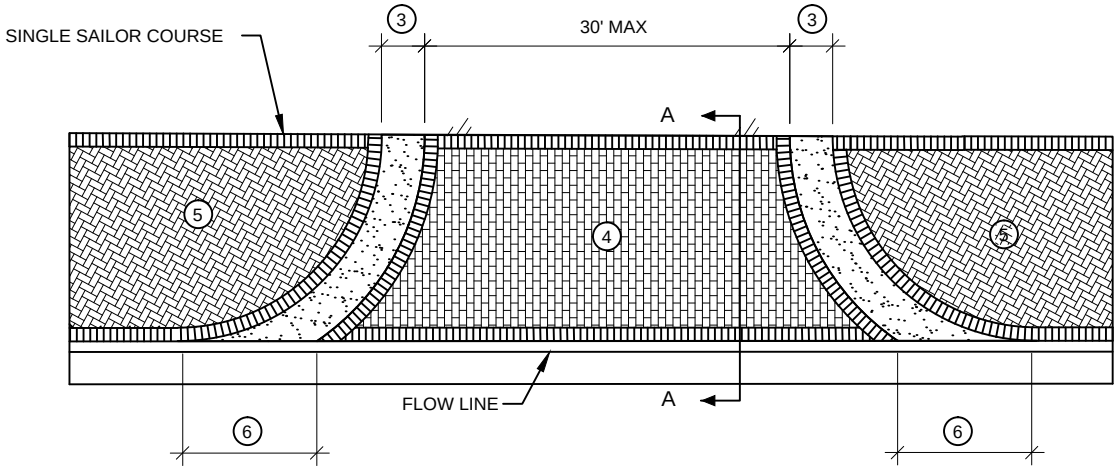

NOTES

1. APRONS SHALL BE CONSTRUCTED AT LEAST 3 FEET FROM ALL UTILITY POLES, FIRE HYDRANTS, TELEPHONE PEDESTALS, ETC.
2. APRON FLARES AND ANY OTHER PART OF THE DRIVEWAY, SHALL NOT ENCROACH ONTO ADJACENT PROPERTY.
3. 24" WIDE CONCRETE TRANSITION STRIP; RADIUS AS PER PLANS.
4. HEAVY VEHICULAR PAVERS
   SIZE: 4" X 8' X 2 3/4", TYPE F
   COLOR: ENGLISH EDGE DARK ACCENT
   PATTERN: RUNNING BOND
   MANUFACTURED BY: PINE HALL BRICK COMPANY, WINSTON SALEM, NC OR APPROVED EQUAL
5. SIDEWALK BRICK PAVER
   SIZE: 4" X 8' X 2 1/4"
   COLOR: PATHWAY FULL RANGE (FR)
   PATTERN: 45° HERRINGBONE
   MANUFACTURED BY: PINE HALL BRICK COMPANY, WINSTON SALEM, NC OR APPROVED EQUAL
6. WIPE DOWN CURB ALONG CONCRETE STRIP

CITY OF NORFOLK DEPT. OF PUBLIC WORKS	DESCRIPTION COMMERCIAL BRICK DRIVEWAY APRON			DESIGNATION HS-210
	SCALE NOT TO SCALE	EDITION NCDS2014.06	REVISED JUNE 2014	

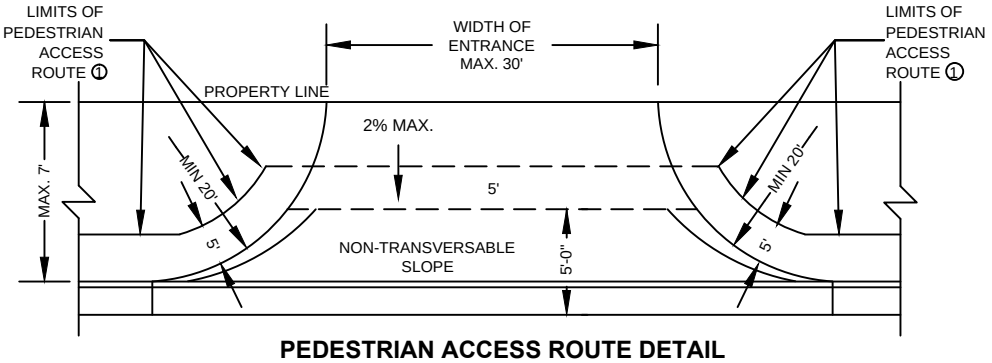

PEDESTRIAN ACCESS ROUTE DETAIL

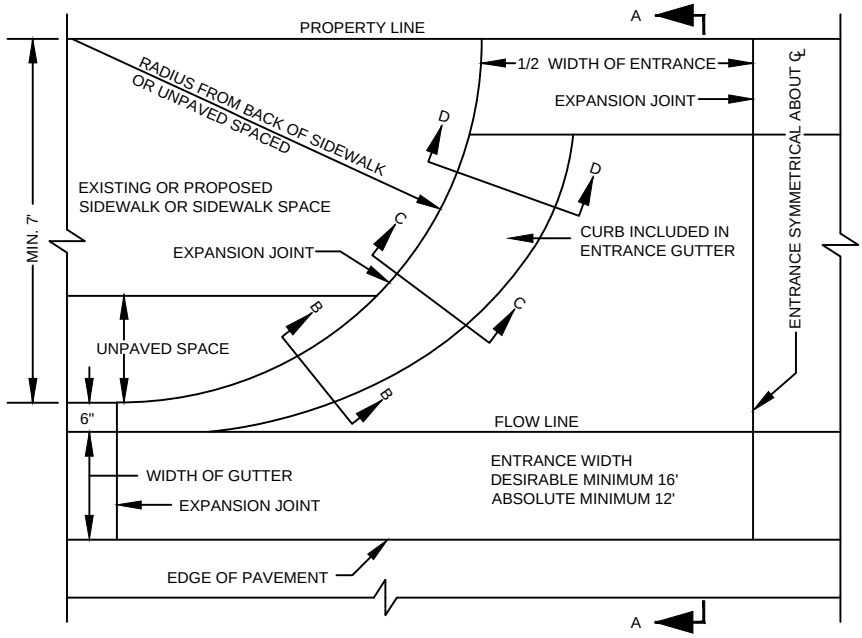

HALF PLAN

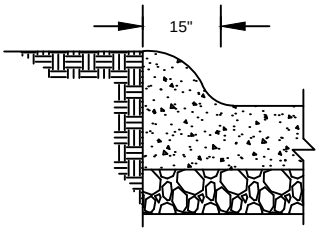

SECTION B-B

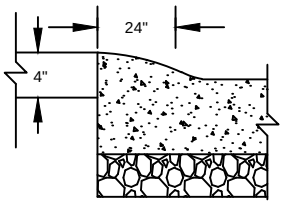

SECTION C-C

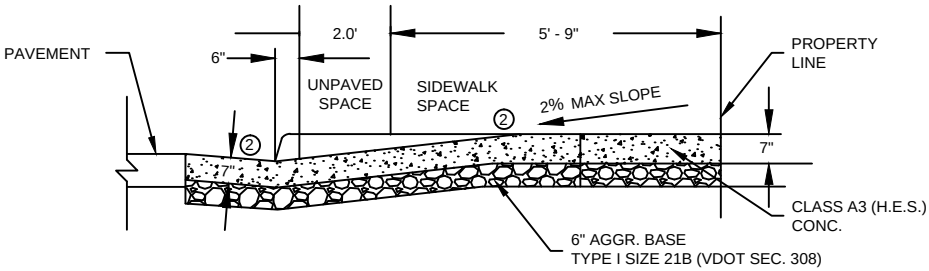

SECTION A - A

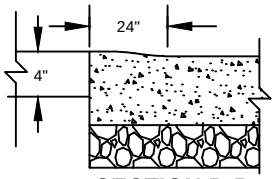

SECTION D-D

NOTES:

① ADDITIONAL RIGHT -OF-WAY IS REQUIRED IF THE LIMITS OF PEDESTRIAN ACCESS ROUTE EXTENDS BEYOND EXISTING OR PROPOSED RIGHT-OF-WAY.

② POINT OF GRADE CHANGE.

CITY OF NORFOLK DEPT. OF PUBLIC WORKS	DESCRIPTION STANDARD COMMERCIAL DRIVEWAY APRON			DESIGNATION HS-212
	SCALE NOT TO SCALE	EDITION NCDS2014.06	REVISED JUNE 2014	

NOTES

1. TACK COAT: CRS-1 OR RC-250 @ 0.10 GAL. PER SQUARE YARD ALL VERTICAL SURFACES.
2. REFER TO UTILITY PIPE BEDDING SPECIFICATIONS.

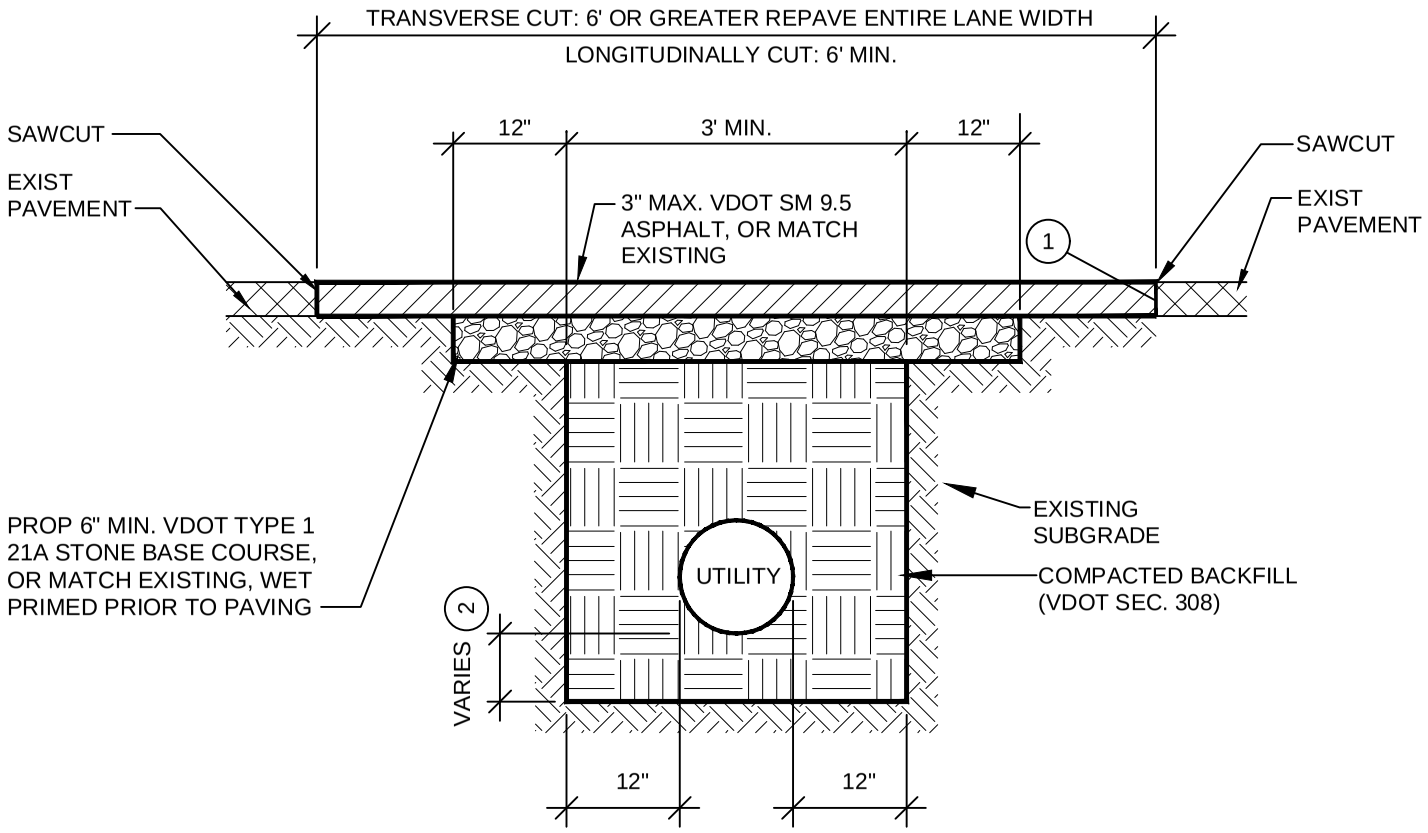

TYPE I
(BITUMINOUS ASPHALT OVER STONE)

CITY OF NORFOLK
DEPT. OF PUBLIC WORKS

DESCRIPTION
STANDARD PAVEMENT REPLACEMENT
ASPHALT OVER STONE

SCALE
NOT TO SCALE

EDITION
NCDS2014.06

REVISED
JUNE 2014

DESIGNATION
HS-301

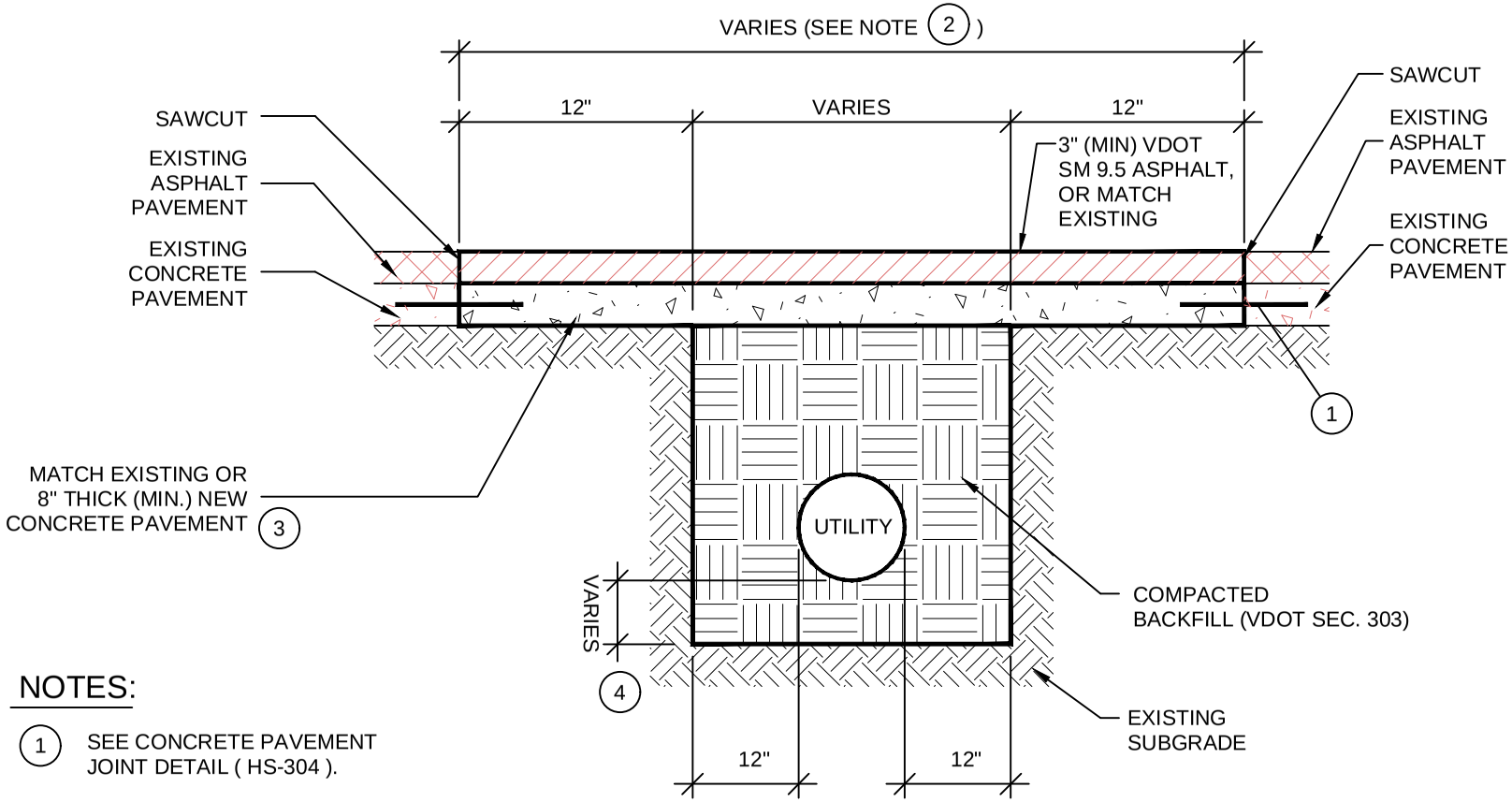

NOTES:

1. SEE CONCRETE PAVEMENT JOINT DETAIL (HS-304).
2. LIMITS OF RESTORATION ARE DEFINED IN THE RIGHT-OF WAY EXCAVATION AND RESTORATION MANUAL.
3. CONCRETE SHALL BE CLASS A3 OR CLASS A5 EARLY STRENGTH CONCRETE.
4. REFER TO UTILITY PIPE BEDDING SPECIFICATIONS.

TYPE II
(BITUMINOUS ASPHALT OVER CONCRETE)

CITY OF NORFOLK
DEPT. OF PUBLIC WORKS

DESCRIPTION
STANDARD PAVEMENT REPLACEMENT
ASPHALT OVER CONCRETE

SCALE
NOT TO SCALE

EDITION
NCDS2014.06

REVISED
JUNE 2014

DESIGNATION
HS-302

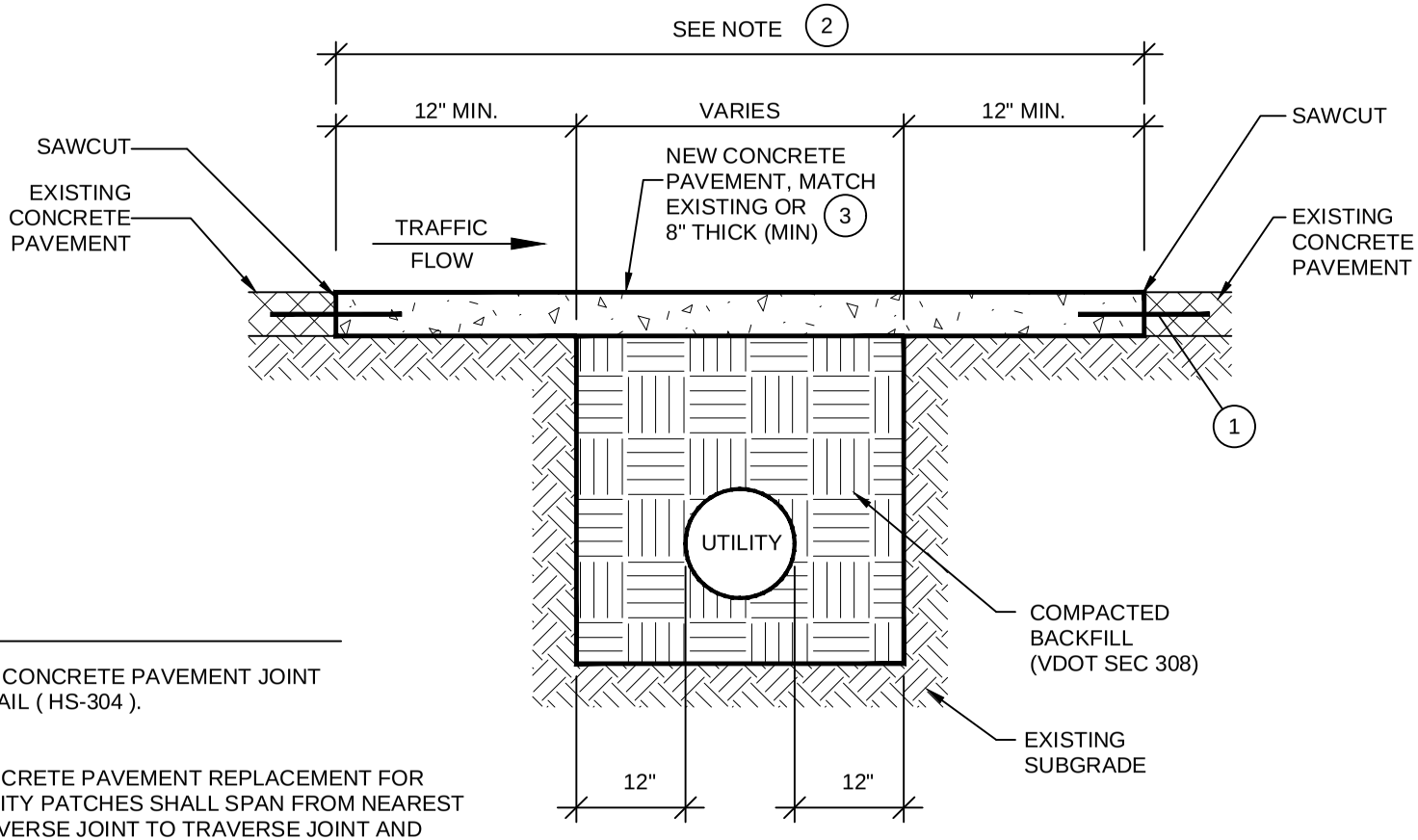

NOTES

1. SEE CONCRETE PAVEMENT JOINT DETAIL (HS-304).
2. CONCRETE PAVEMENT REPLACEMENT FOR UTILITY PATCHES SHALL SPAN FROM NEAREST TRAVERSE JOINT TO TRAVERSE JOINT AND FROM LONGITUDINAL JOINT TO LONGITUDINAL JOINT. DEFINED IN THE RIGHT-OF-WAY EXCAVATION AND RESTORATION MANUAL.
3. CONCRETE SHALL BE CLASS A3 OR CLASS A5 EARLY STRENGTH CONCRETE.

TYPE III
(CONCRETE)

CITY OF NORFOLK
DEPT. OF PUBLIC WORKS

DESCRIPTION
STANDARD PAVEMENT REPLACEMENT
CONCRETE

SCALE
NOT TO SCALE

EDITION
NCDS2014.06

REVISED
JUNE 2014

DESIGNATION
HS-303

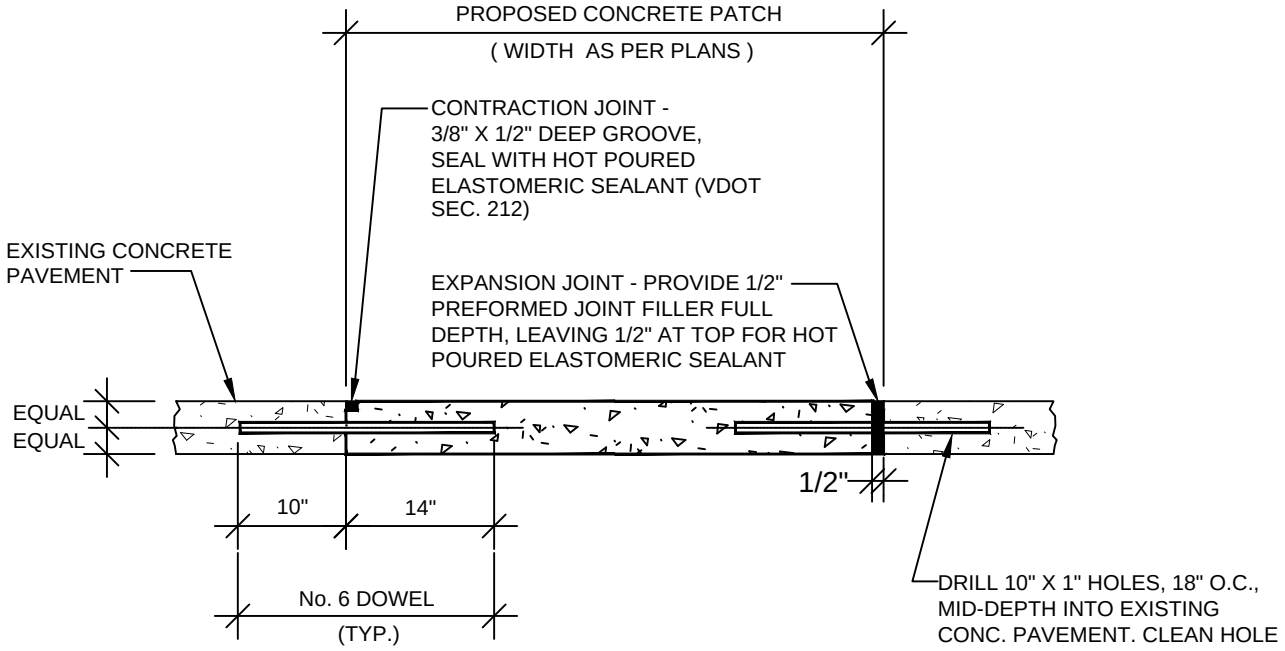

TRANSVERSE JOINTS

AT LONGITUDINAL JOINTS, PROVIDE DOWELS AT MAXIMUM 30" O.C. WITH MINIMUM DISTANCE OF 18" FROM TRANSVERSE JOINT.

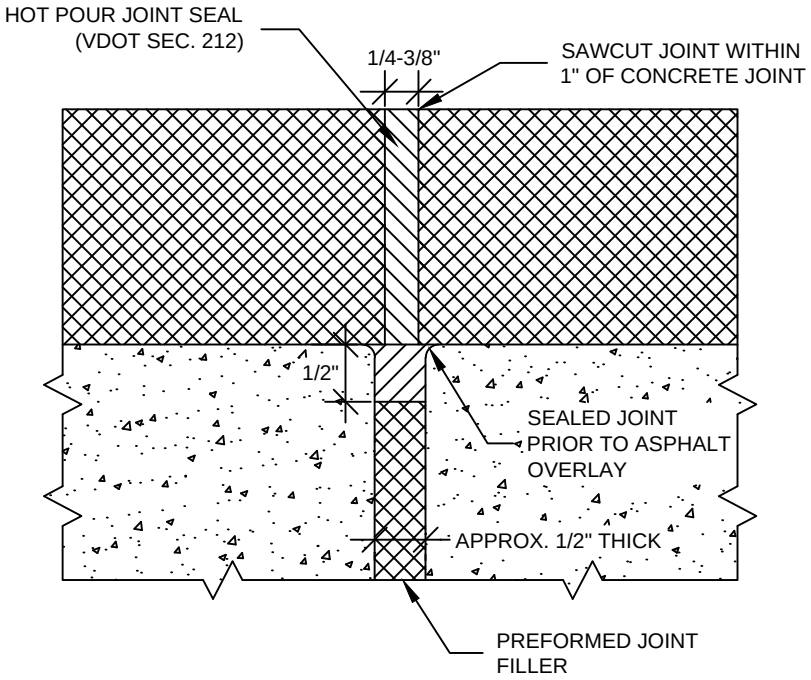

EXPANSION JOINT SEAL IN ASPHALT OVERLAY

CITY OF NORFOLK DEPT. OF PUBLIC WORKS	DESCRIPTION			DESIGNATION
	CONCRETE PAVEMENT JOINT DETAIL			HS-304
	SCALE NOT TO SCALE	EDITION NCDS2014.06	REVISED JUNE 2014	

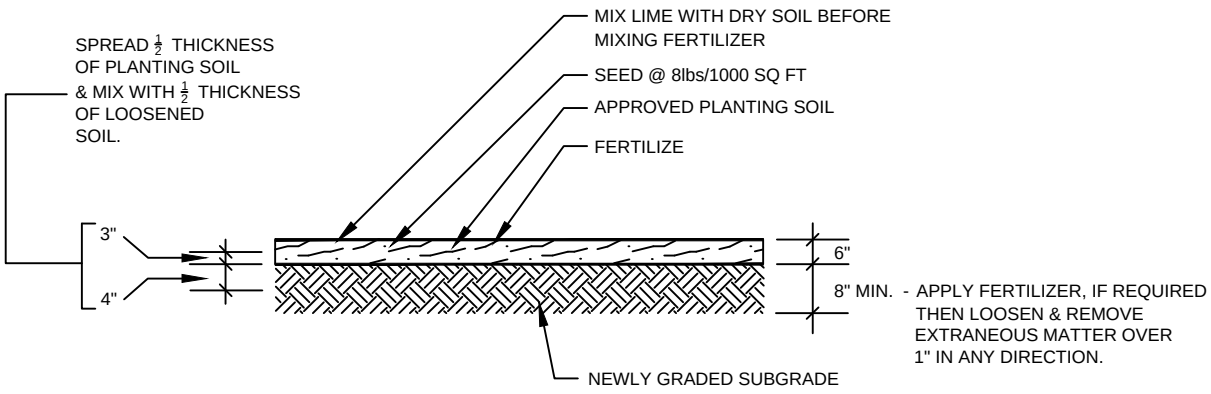

NOTES:

NEWLY GRADED AREAS

1. SEE "TURF AND GRASS" SPECIFICATIONS FOR SEED TYPE, PLANTING SEASONS, HYDRO-SEEDING, SODDING AND OTHER REQUIREMENTS.
2. TEST SOIL AND APPLY AMENDMENTS AND FERTILIZER TO COMPLY WITH ASTM D5268.
3. AFTER SEEDING, THE AREA SHALL BE RAKED, ROLLED, WATERED AND MULCHED IN AN APPROVED MANNER.
4. THE CONTRACTOR SHALL MAINTAIN ALL GRASSED AREAS TO PROVIDE FOR A SMOOTH UNIFORM TURF UPON COMPLETION OF THE CONTRACT.

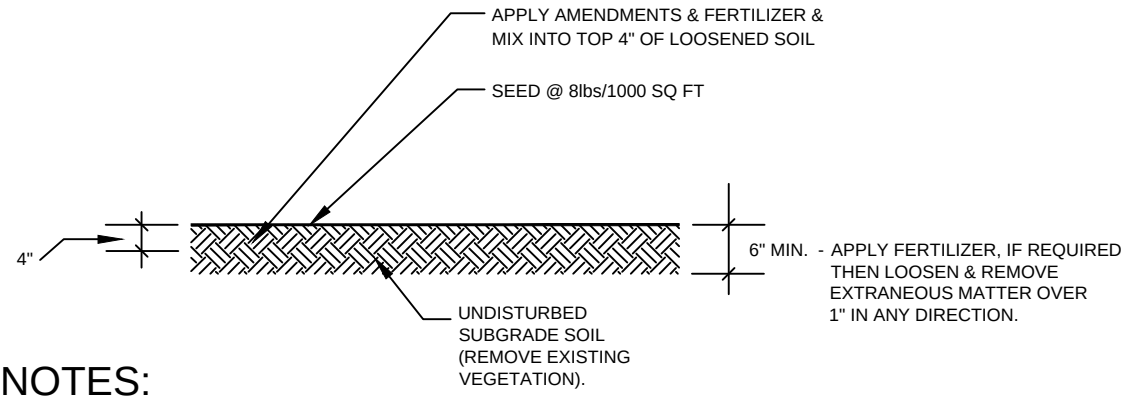

NOTES:

EXISTING AREAS

1. SEE "TURF AND GRASS" SPECIFICATIONS FOR SEED TYPE, PLANTING SEASONS, HYDRO-SEEDING, SODDING AND OTHER REQUIREMENTS.
2. TEST SOIL AND APPLY AMENDMENTS AND FERTILIZER TO COMPLY WITH ASTM D5268. AFTER SEEDING, THE AREA SHALL BE RAKED, ROLLED, WATERED

CITY OF NORFOLK DEPT. OF PUBLIC WORKS	DESCRIPTION			DESIGNATION
	STANDARD GRASS PLANTING DETAIL			HS-601
	SCALE NOT TO SCALE	EDITION NCDS2014.06	REVISED JUNE 2014	

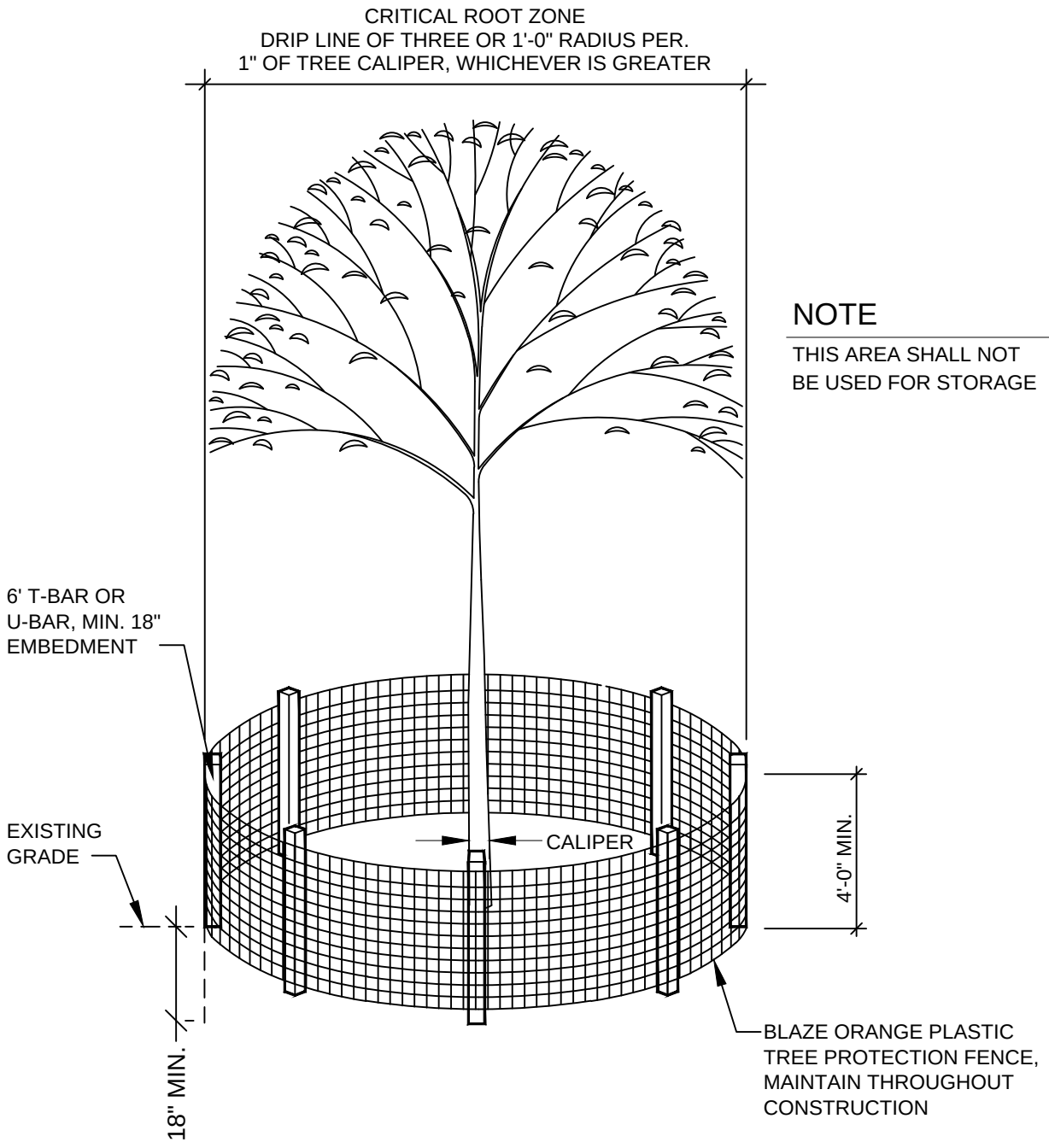

NOTE

THIS AREA SHALL NOT
BE USED FOR STORAGE

CITY OF NORFOLK DEPT. OF PUBLIC WORKS	DESCRIPTION STANDARD TREE PROTECTION DETAIL			DESIGNATION HS-602
	SCALE NOT TO SCALE	EDITION NCDS2014.06	REVISED JUNE 2014	

SIDE ELEVATION

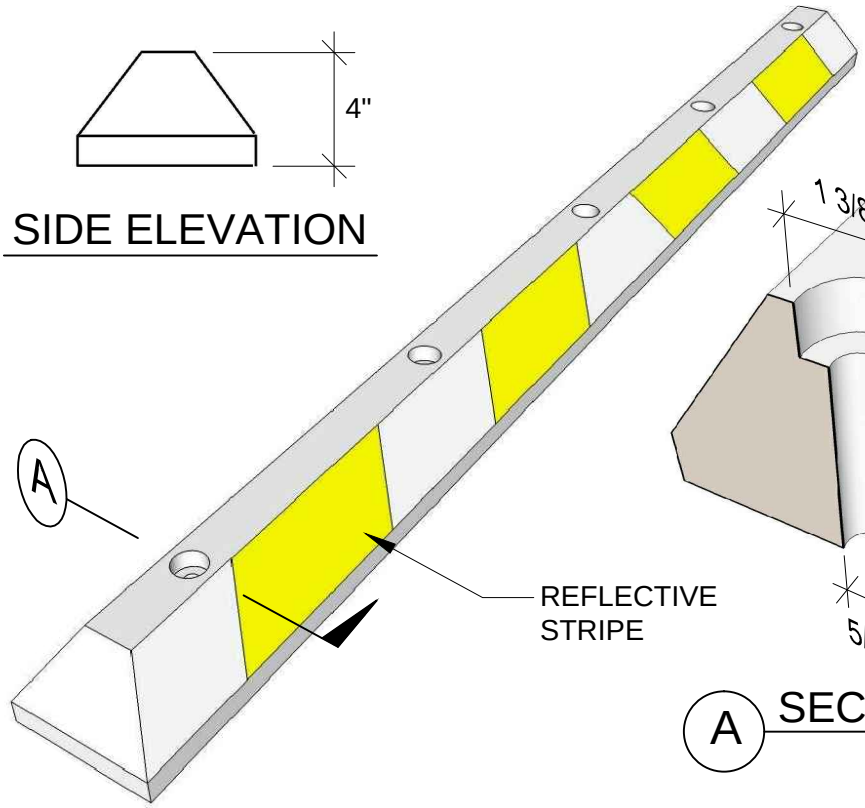

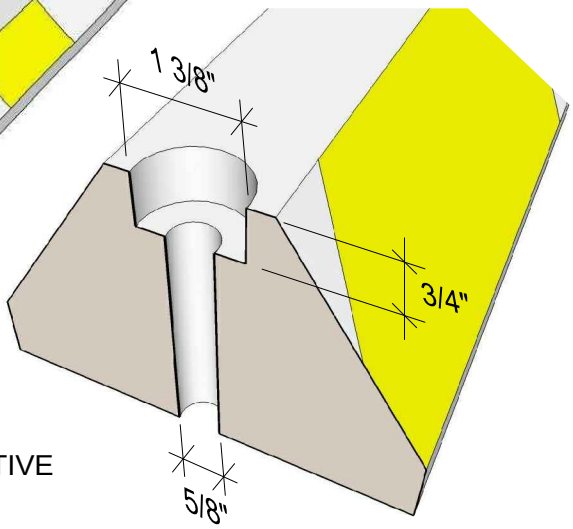

A SECTION

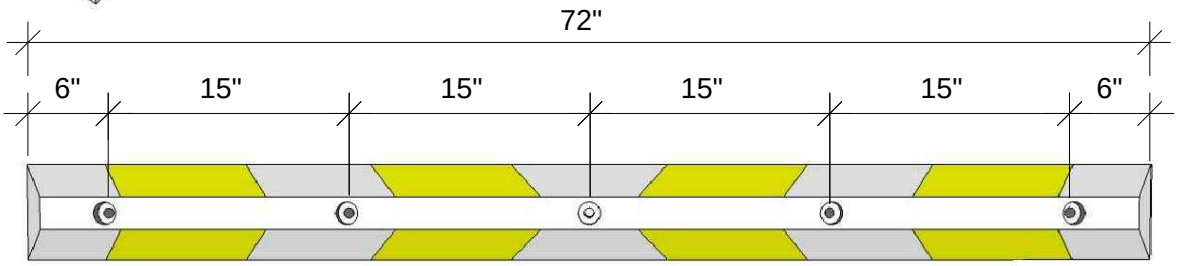

PLAN VIEW

FRONT ELEVATION

1. MATERIAL SHALL BE 100% RECYCLED RUBBER.

2. REFLECTIVE STRIPES SHALL BE YELLOW EXCEPT AT HANDICAP STALLS; THEN THE COLOR SHALL BE BLUE

3. ANCHORS SHALL BE 1/2" X 8" LAG BOLTS WITH METAL SHIELDS (APPLICABLE TO ASPHALT AND CONCRETE PAVEMENT). 1/2" X 14" REBAR SPIKES MAY BE USED WITH ASPHALT PAVEMENT ONLY.

CITY OF NORFOLK DEPT. OF PUBLIC WORKS	DESCRIPTION RECYCLED RUBBER WHEEL STOP (BUMPER LOG)			DESIGNATION HS-603
	SCALE NOT TO SCALE	EDITION NCDS2014.06	REVISED MARCH 2013	

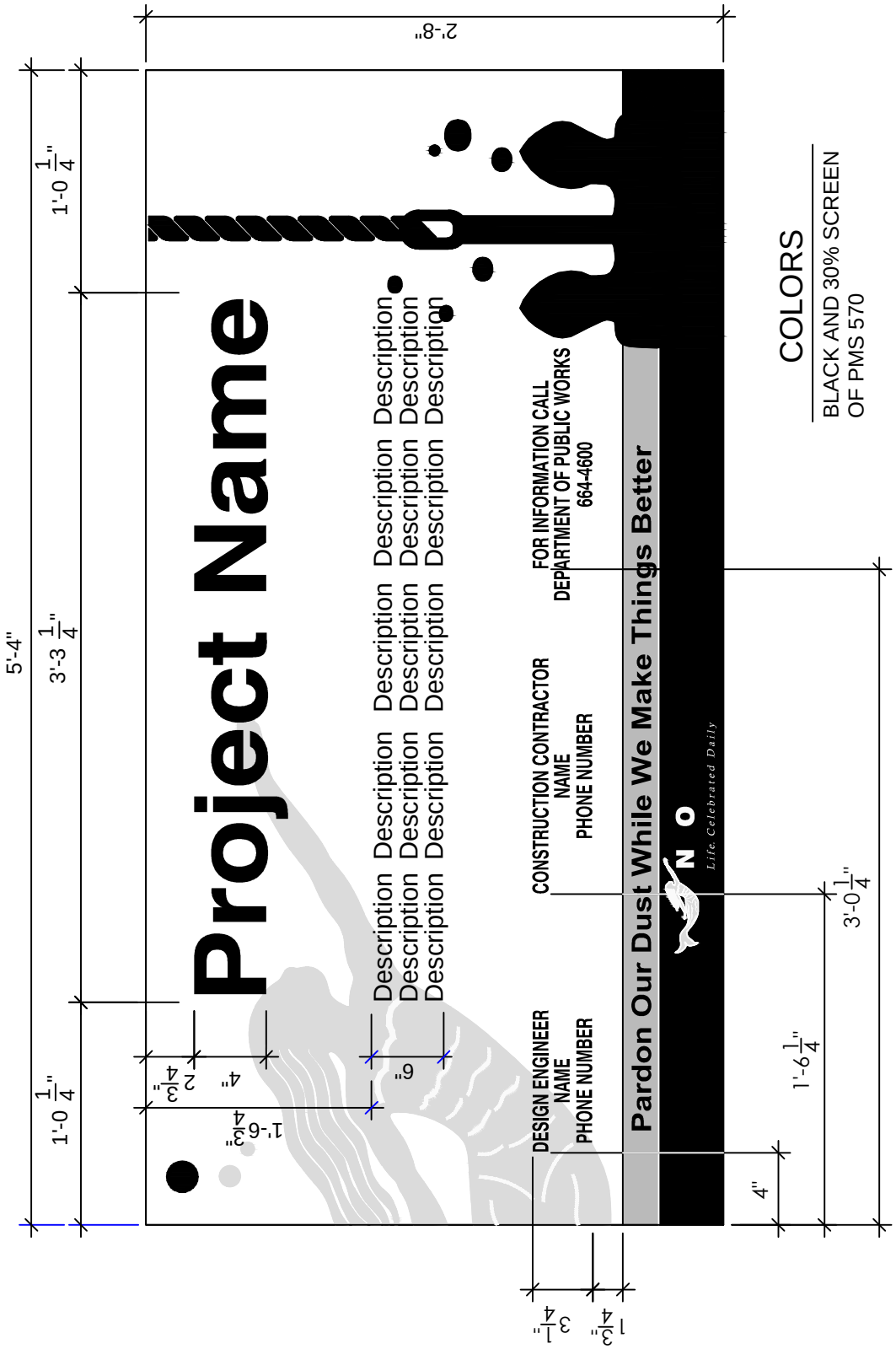

CITY OF NORFOLK DEPT. OF PUBLIC WORKS	DESCRIPTION STANDARD CITY CONSTRUCTION SIGN (SMALL)			DESIGNATION HS-604
	SCALE NOT TO SCALE	EDITION NCDS2014.06	REVISED JAN. 2004	

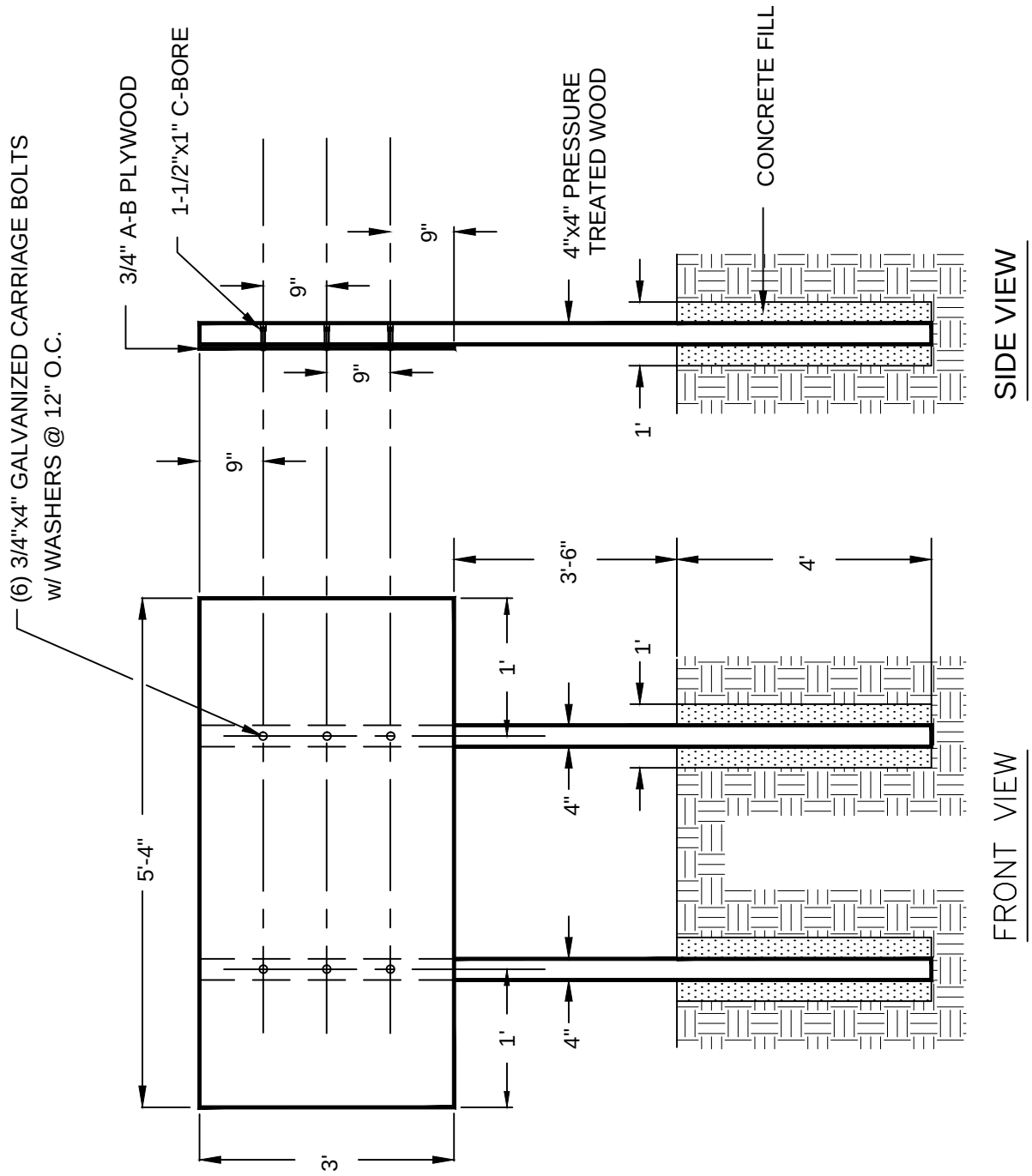

CITY OF NORFOLK	DESCRIPTION			DESIGNATION
DEPT. OF PUBLIC WORKS	CONSTRUCTION SIGN INSTALLATION (SMALL)			HS-605
	SCALE NOT TO SCALE	EDITION NCDS2014.06	REVISED JAN. 2004	

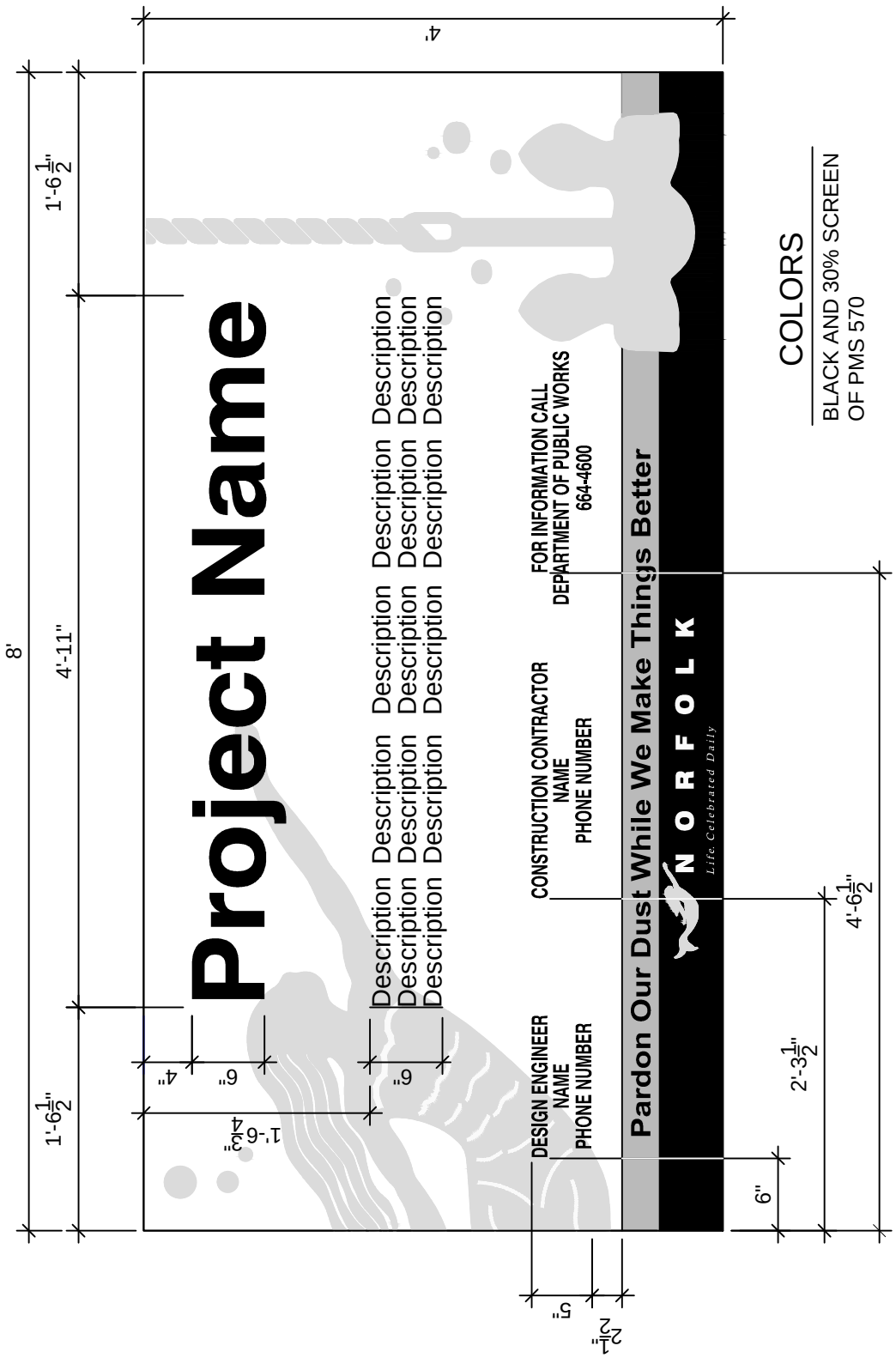

CITY OF NORFOLK DEPT. OF PUBLIC WORKS	DESCRIPTION STANDARD CITY CONSTRUCTION SIGN (LARGE)			DESIGNATION HS-606
	SCALE NOT TO SCALE	EDITION NCDS2014.06	REVISED JAN. 2004	

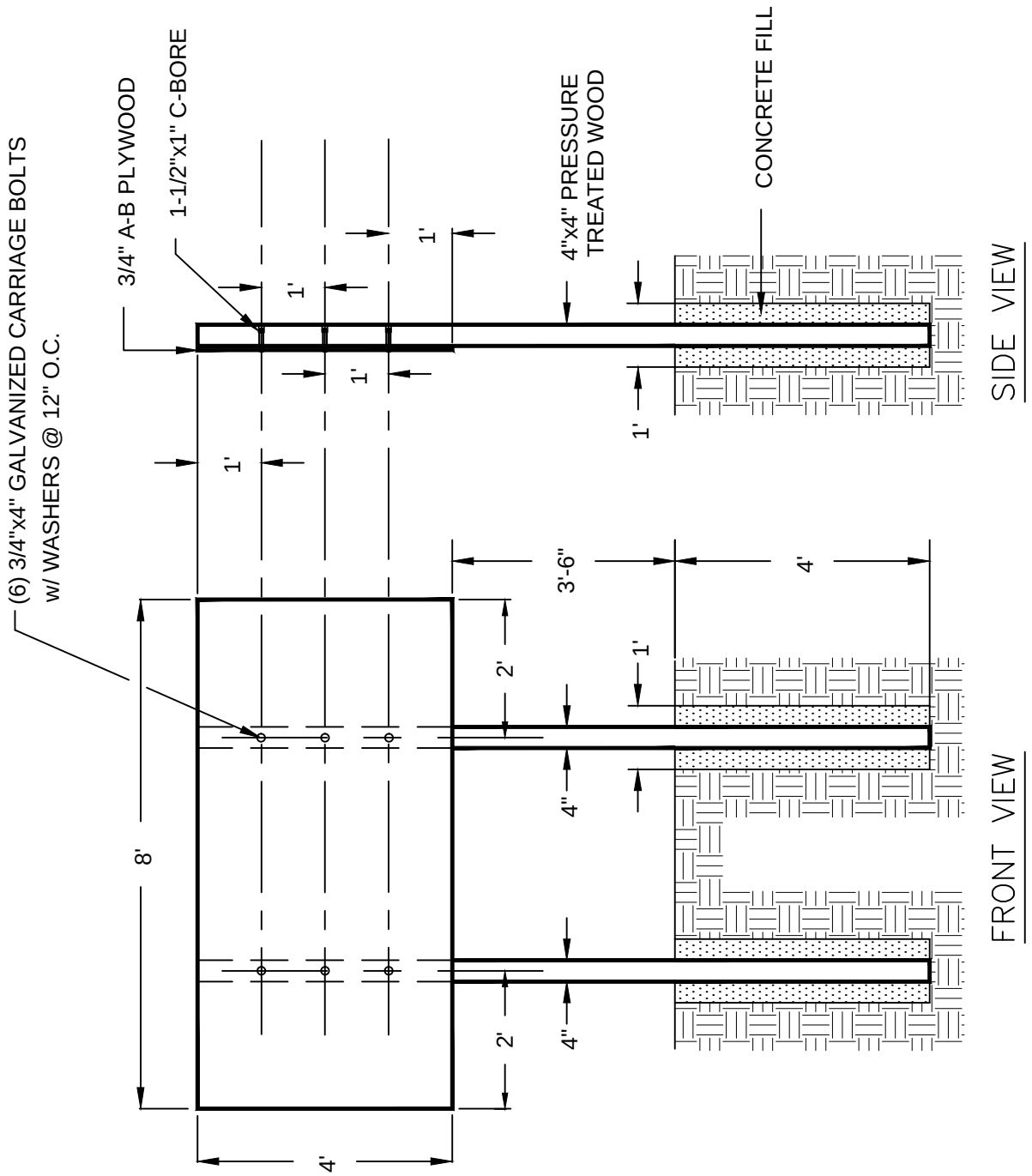

CITY OF NORFOLK	DESCRIPTION			DESIGNATION
DEPT. OF PUBLIC WORKS	CONSTRUCTION SIGN INSTALLATION (LARGE)			HS-607
	SCALE NOT TO SCALE	EDITION NCDS2014.06	REVISED JAN. 2004	

HAMPTON ROADS
PLANNING DISTRICT COMMISSION

REGIONAL
CONSTRUCTION STANDARDS

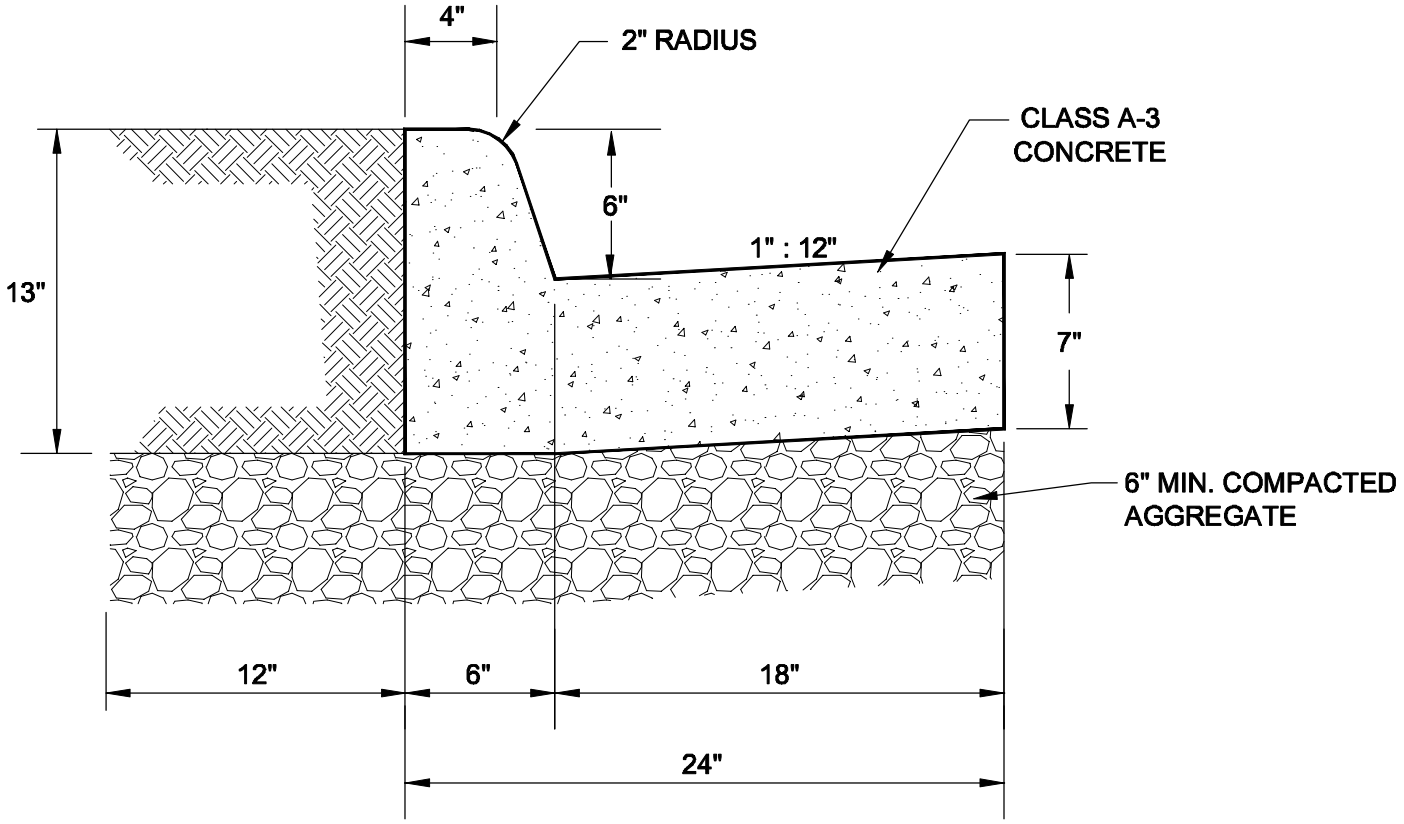

NOTES:

1. CRACK CONTROL JOINTS TO BE PROVIDED AT 10 FT. INTERVALS BY SAWING, SCORING, "LEAVE-IN" INSERTS, OR CUTTER PLATES TO 1-1/2 INCH DEPTH.

2. EXPANSION JOINTS TO BE INSTALLED PER SPECIFICATIONS SECTION 502.

3. AS SOON AS CONCRETE WILL NOT SLUMP, FACE FORMS ARE TO BE REMOVED, IRREGULARITIES REMOVED, A LIGHT BROOM FINISH GIVEN, AND LIQUID MEMBRANE SEAL OR OTHER APPROVED CURING MEDIUM APPLIED.

4. THE CONTRACTOR SHALL PREVENT THE TEMPERATURE AT THE SURFACE OF THE CONCRETE FROM FALLING BELOW 40°F DURING THE FIRST 72 HOURS IMMEDIATELY FOLLOWING CONCRETE PLACEMENT. PROTECTIVE MATERIAL SHALL BE LEFT IN PLACE FOR AN ADDITIONAL 48 HOURS IF FREEZING AIR TEMPERATURES ARE EXPECTED TO CONTINUE.

24" CURB & GUTTER

NOT TO SCALE

REFERENCE	CATEGORY	DATE	SHEET No.	DETAIL No.
200,502	CONCRETE ITEMS	12/10	1 OF 1	CI_01

HAMPTON ROADS
PLANNING DISTRICT COMMISSION
REGIONAL
CONSTRUCTION STANDARDS

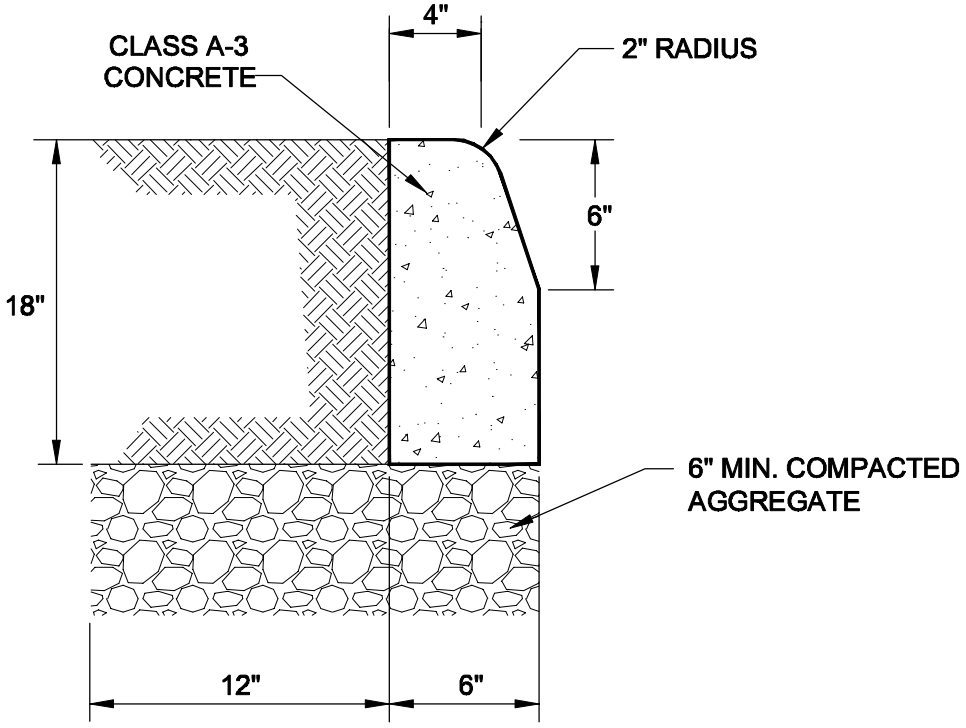

NOTES:

1. CRACK CONTROL JOINTS TO BE PROVIDED AT 10 FT. INTERVALS BY SAWING, SCORING, "LEAVE-IN" INSERTS, OR CUTTER PLATES TO 1-1/2 INCH DEPTH.

2. EXPANSION JOINTS TO BE INSTALLED PER SPECIFICATIONS SECTION 502.

3. AS SOON AS CONCRETE WILL NOT SLUMP, FACE FORMS ARE TO BE REMOVED, IRREGULARITIES REMOVED, A LIGHT BROOM FINISH GIVEN, AND LIQUID MEMBRANE SEAL OR OTHER APPROVED CURING MEDIUM APPLIED.

4. THE CONTRACTOR SHALL PREVENT THE TEMPERATURE AT THE SURFACE OF THE CONCRETE FROM FALLING BELOW 40°F DURING THE FIRST 72 HOURS IMMEDIATELY FOLLOWING CONCRETE PLACEMENT. PROTECTIVE MATERIAL SHALL BE LEFT IN PLACE FOR AN ADDITIONAL 48 HOURS IF FREEZING AIR TEMPERATURES ARE EXPECTED TO CONTINUE.

STANDARD MEDIAN CURB

NOT TO SCALE

REFERENCE	CATEGORY	DATE	SHEET No.	DETAIL No.
200,502	CONCRETE ITEMS	12/10	1 OF 1	CI_03

HAMPTON ROADS
PLANNING DISTRICT COMMISSION

REGIONAL
CONSTRUCTION STANDARDS

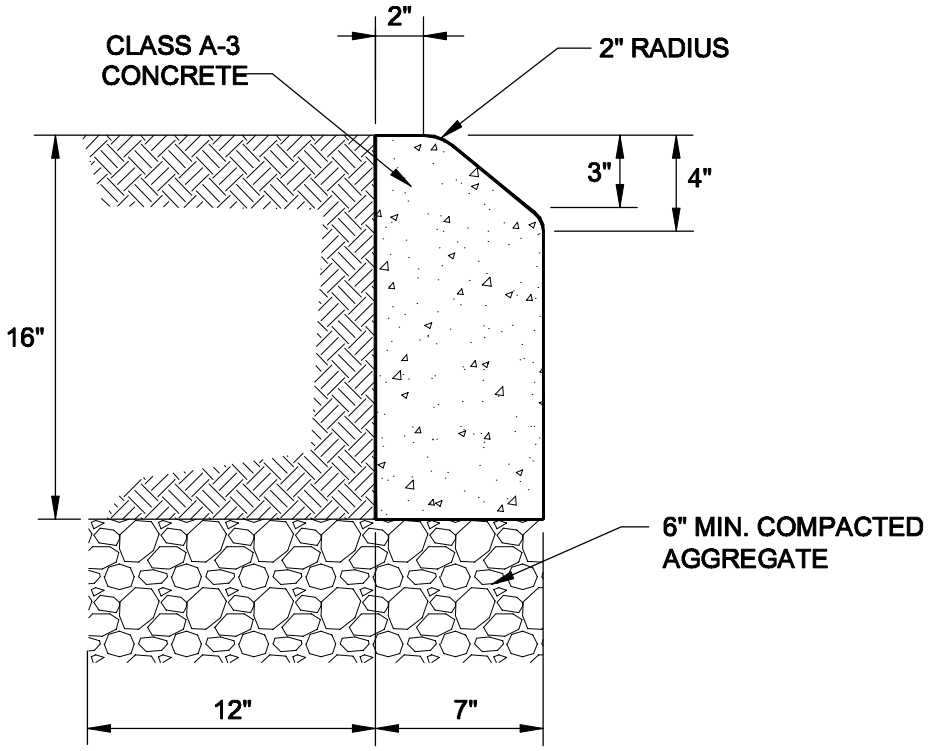

NOTES:

1. CRACK CONTROL JOINTS TO BE PROVIDED AT 10 FT. INTERVALS BY SAWING, SCORING, "LEAVE-IN" INSERTS, OR CUTTER PLATES TO 1-1/2 INCH DEPTH.

2. EXPANSION JOINTS TO BE INSTALLED PER SPECIFICATIONS SECTION 502.

3. AS SOON AS CONCRETE WILL NOT SLUMP, FACE FORMS ARE TO BE REMOVED, IRREGULARITIES REMOVED, A LIGHT BROOM FINISH GIVEN, AND LIQUID MEMBRANE SEAL OR OTHER APPROVED CURING MEDIUM APPLIED.

4. THE CONTRACTOR SHALL PREVENT THE TEMPERATURE AT THE SURFACE OF THE CONCRETE FROM FALLING BELOW 40°F DURING THE FIRST 72 HOURS IMMEDIATELY FOLLOWING CONCRETE PLACEMENT. PROTECTIVE MATERIAL SHALL BE LEFT IN PLACE FOR AN ADDITIONAL 48 HOURS IF FREEZING AIR TEMPERATURES ARE EXPECTED TO CONTINUE.

MOUNTABLE CURB

NOT TO SCALE

REFERENCE	CATEGORY	DATE	SHEET No.	DETAIL No.
200,502	CONCRETE ITEMS	12/10	1 OF 1	CI_04

HAMPTON ROADS
PLANNING DISTRICT COMMISSION

REGIONAL
CONSTRUCTION STANDARDS

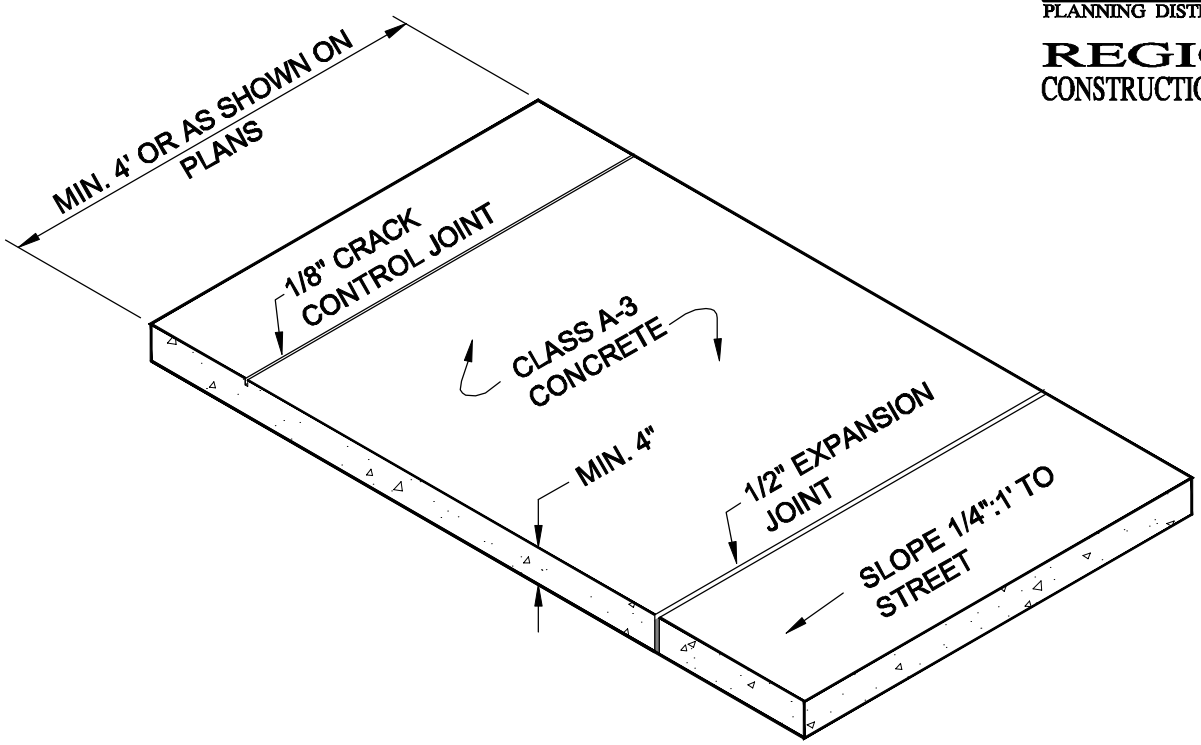

NOTES:

1. CRACK CONTROL JOINTS TO BE PROVIDED AT INTERVALS EQUAL TO THE WIDTH OF THE SIDEWALK BY SAWING, SCORING, "LEAVE-IN" INSERTS, OR CUTTER PLATES AND SHALL EXTEND INTO THE CONCRETE TO 1/4 OF THE DEPTH.

2. EXPANSION JOINTS TO BE INSTALLED AT INTERVALS NOT EXCEEDING 50', AND AT JUNCTION POINTS OF CURBS AND ENTRANCES, AND ON BOTH SIDES OF ALL SIDEWALK SECTIONS CONTAINING UTILITIES. PREMOLDED, 1/2" JOINT FILLER IS TO BE USED EXTENDING FROM BOTTOM OF SLAB TO 1/4" OF ITS TOP SURFACE.

3. AS SOON AS CONCRETE WILL NOT SLUMP, FACE FORMS ARE TO BE REMOVED, IRREGULARITIES REMOVED, A LIGHT BROOM FINISH GIVEN, AND A LIQUID MEMBRANE SEAL OR OTHER APPROVED CURING MEDIUM APPLIED.

4. SIDEWALKS ACROSS ENTRANCES SHALL HAVE A DEPTH OF SEVEN INCHES (7") WITH A MAXIMUM SLOPE OF 1":12".

5. THE CONTRACTOR SHALL PREVENT THE TEMPERATURE AT THE SURFACE OF THE CONCRETE FROM FALLING BELOW 40°F DURING THE FIRST 72 HOURS IMMEDIATELY FOLLOWING CONCRETE PLACEMENT. PROTECTIVE MATERIAL SHALL BE LEFT IN PLACE FOR AN ADDTIONAL 48 HOURS IF FREEZING AIR TEMPERATURES ARE EXPECTED TO CONTINUE.

SIDEWALK DETAIL

NOT TO SCALE

REFERENCE	CATEGORY	DATE	SHEET No.	DETAIL No.
200,502	CONCRETE ITEMS	12/10	1 OF 1	CI_09

HAMPTON ROADS
PLANNING DISTRICT COMMISSION
REGIONAL
CONSTRUCTION STANDARDS

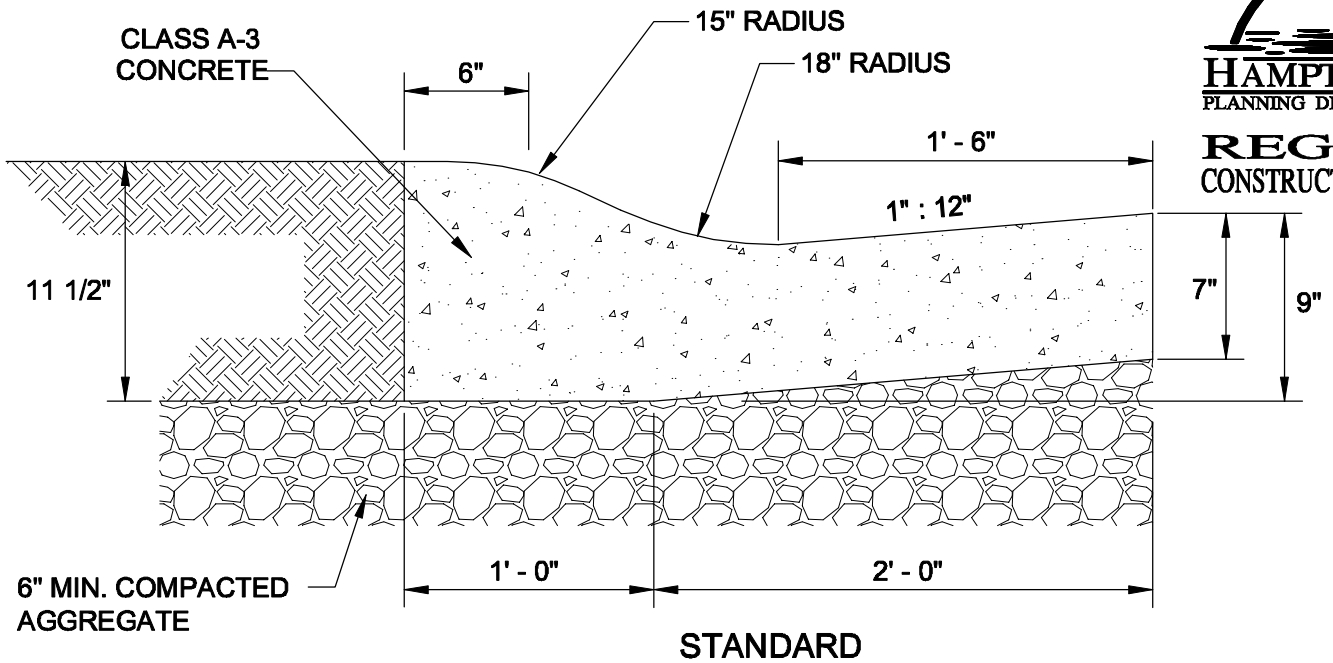

STANDARD

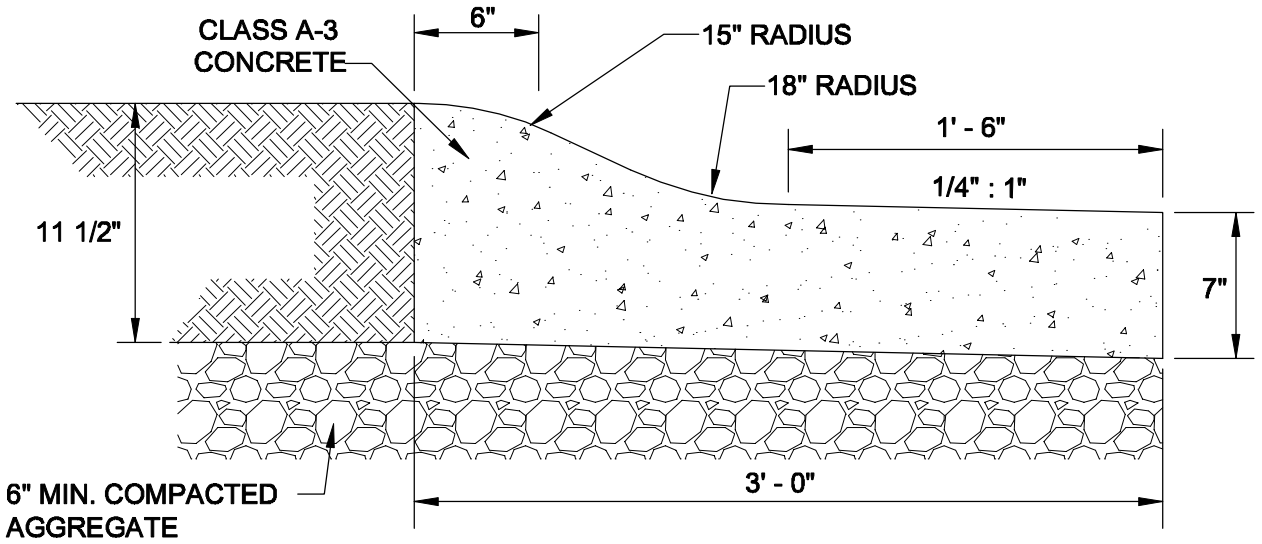

REVERSE

NOTES:

1. CRACK CONTROL JOINTS TO BE PROVIDED AT 10 FT. INTERVALS BY SAWING, SCORING, "LEAVE-IN" INSERTS, OR CUTTER PLATES TO 1-1/2 INCH DEPTH.

2. EXPANSION JOINTS TO BE INSTALLED PER SPECIFICATIONS SECTION 502.

3. AS SOON AS CONCRETE WILL NOT SLUMP, FACE FORMS ARE TO BE REMOVED, IRREGULARITIES REMOVED, A LIGHT BROOM FINISH GIVEN, AND LIQUID MEMBRANE SEAL OR OTHER APPROVED CURING MEDIUM APPLIED.

4. THE CONTRACTOR SHALL PREVENT THE TEMPERATURE AT THE SURFACE OF THE CONCRETE FROM FALLING BELOW 40°F DURING THE FIRST 72 HOURS IMMEDIATELY FOLLOWING CONCRETE PLACEMENT. PROTECTIVE MATERIAL SHALL BE LEFT IN PLACE FOR AN ADDITIONAL 48 HOURS IF FREEZING AIR TEMPERATURES ARE EXPECTED TO CONTINUE.

ROLL TOP CURB AND GUTTER

NOT TO SCALE

REFERENCE	CATEGORY	DATE	SHEET No.	DETAIL No.
200,502	CONCRETE ITEMS	12/10	1 OF 1	CI_10

NOTES:

1. CASTING AND COVER TO BE SUPPLIED BY CAPITAL FOUNDRY OF VIRGINIA, INC. OR APPROVED EQUAL.
2. ALL GRAY IRON CASTINGS SHALL CONFORM TO LATEST EDITION OF ASTM A-48, CLASS 30 AND SHALL BE OF UNIFORM QUALITY.
3. ALL CASTING DIMENSIONS SHALL HAVE A TOLERANCE OF 1/8"±.
4. ALL CASTINGS SHALL BE CLEANED BY SHOT BLASTING AND HAND CHIPPING UTILIZING STANDARD INDUSTRY PRACTICES PRIOR TO SHOP APPLICATION OF ASPHALTIC COATING, BY DIPPING.

HAMPTON ROADS PLANNING DISTRICT COMMISSION
REGIONAL CONSTRUCTION STANDARDS

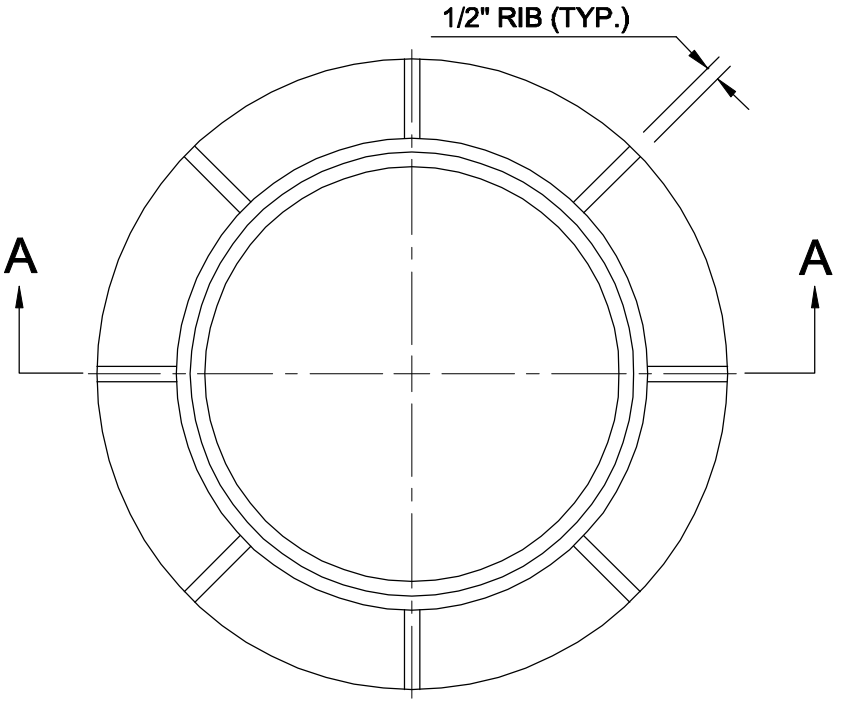

PLAN: CASTING

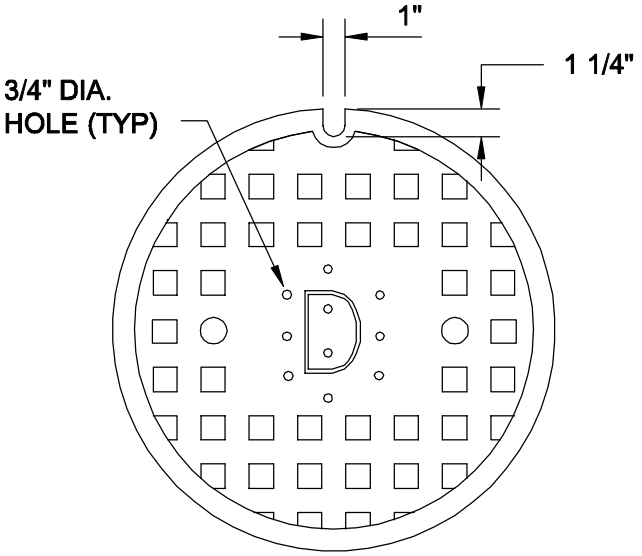

TOP VIEW: COVER

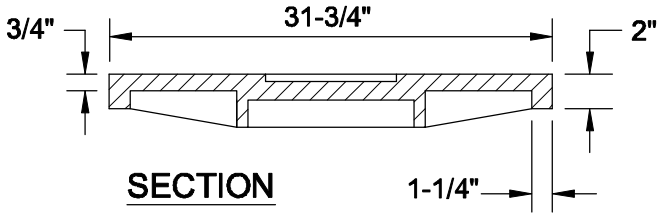

SECTION

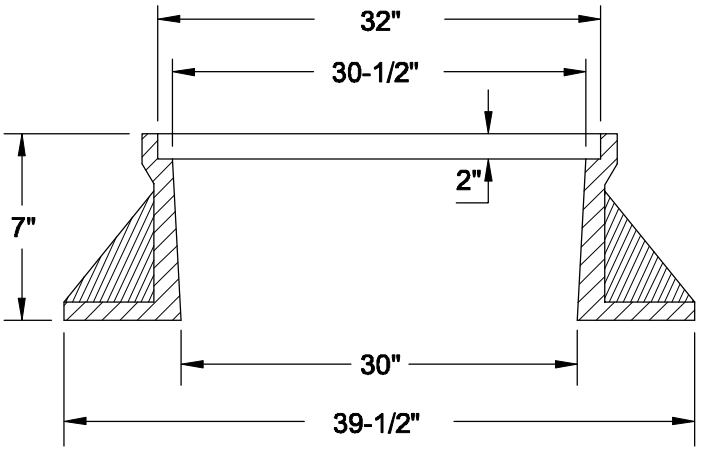

SECTION A-A

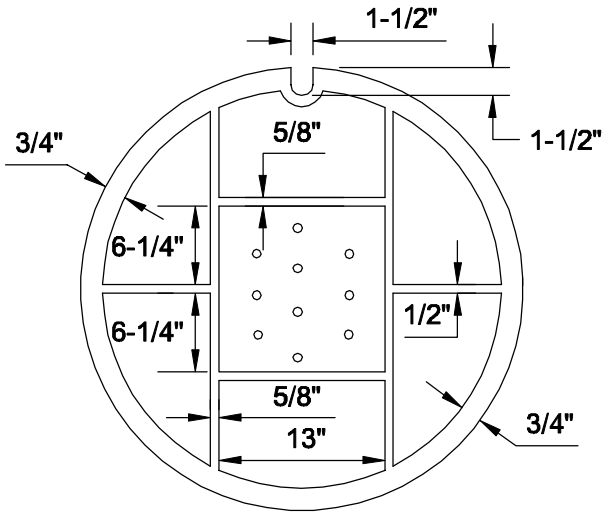

BOTTOM VIEW: COVER

STORM DRAIN CASTING & COVER (30")

NOT TO SCALE

REFERENCE	CATEGORY	DATE	SHEET No.	DETAIL No.
200,302	DRAINAGE STRUCTURES	12/10	1 OF 1	DS_01

HAMPTON ROADS
PLANNING DISTRICT COMMISSION

REGIONAL
CONSTRUCTION STANDARDS

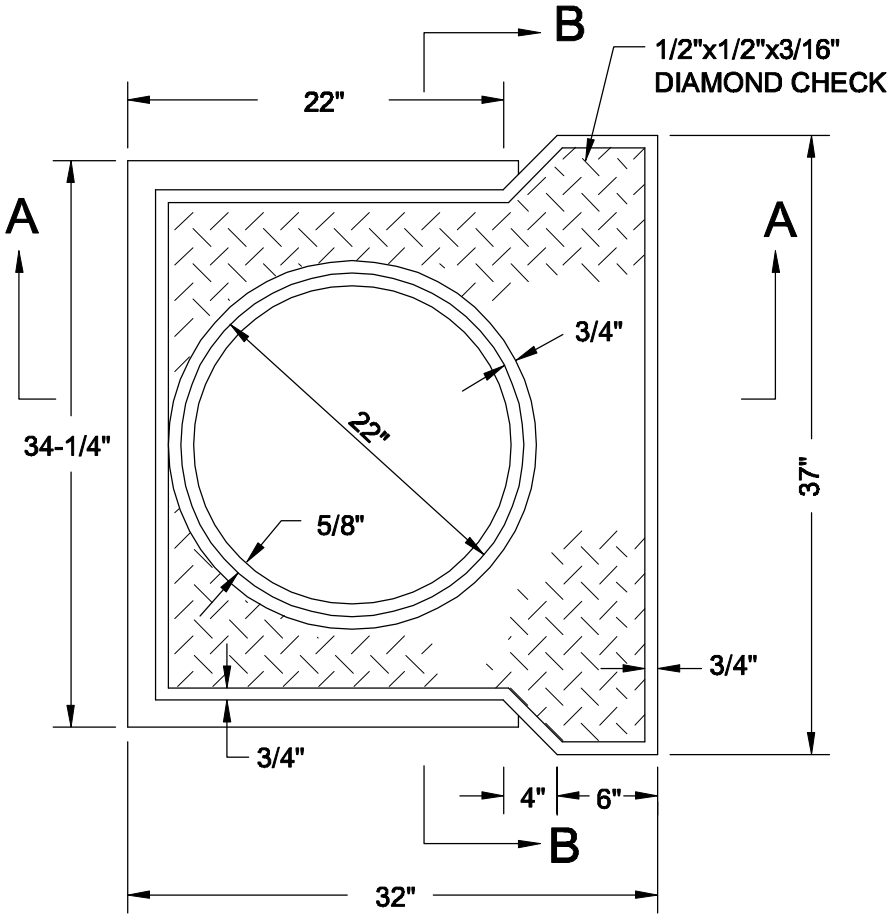

PLAN: FRAME

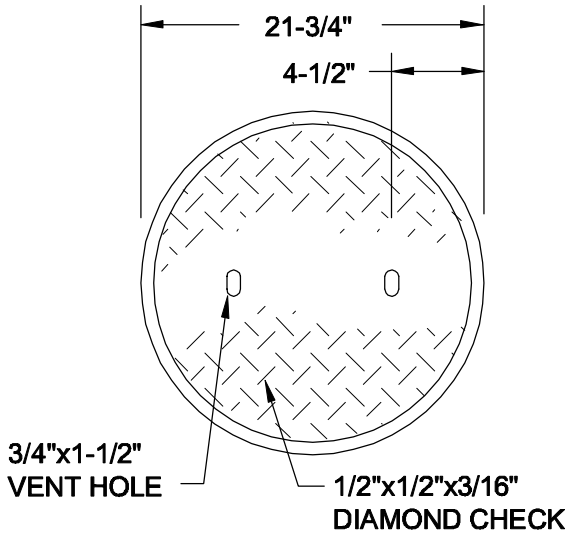

PLAN: COVER

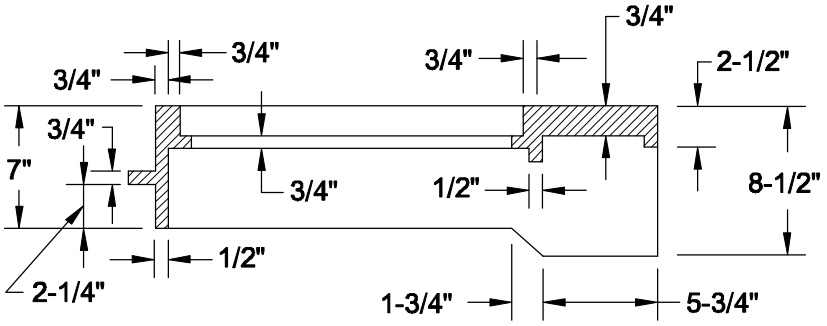

SECTION A-A

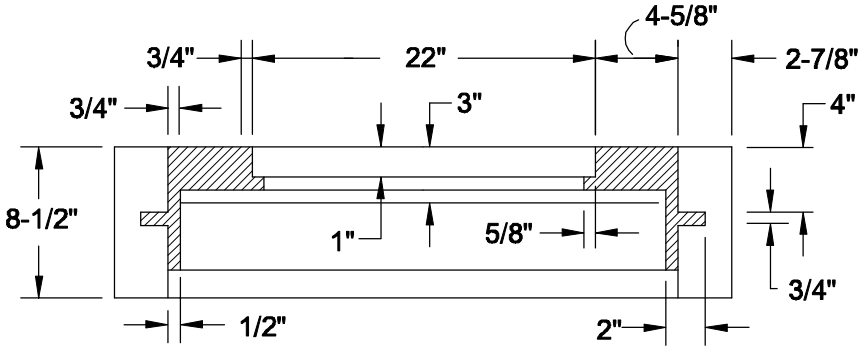

SECTION B-B

NOTES:

1. FRAME & COVER TO BE SUPPLIED BY CAPITAL FOUNDRY OF VIRGINIA, INC., OR APPROVED EQUAL.
2. ALL GRAY IRON CASTINGS SHALL CONFORM TO LATEST EDITION OF ASTM A-48, CLASS 30 AND SHALL BE OF UNIFORM QUALITY.
3. ALL CASTING DIMENSIONS SHALL HAVE A TOLERANCE OF 1/8"±.
4. ALL CASTINGS SHALL BE CLEANED BY SHOT BLASTING AND HAND CHIPPING UTILIZING STANDARD INDUSTRY PRACTICES PRIOR TO SHOP APPLICATION OF ASPHALTIC COATING, BY DIPPING.

CURB INLET/CATCH BASIN FRAME AND COVER

NOT TO SCALE

REFERENCE	CATEGORY	DATE	SHEET No.	DETAIL No.
200,302	DRAINAGE STRUCTURES	12/10	1 OF 1	DS_03

HAMPTON ROADS
PLANNING DISTRICT COMMISSION

REGIONAL
CONSTRUCTION STANDARDS

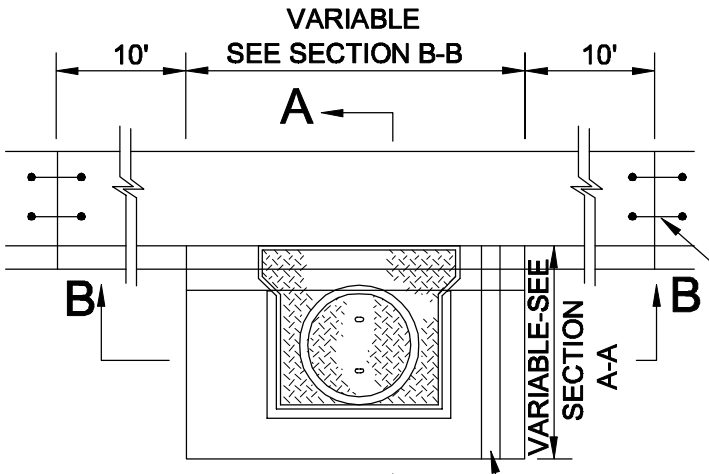

PLAN

(2)-24" #4 DOWELS, PLACED 2" ABOVE GUTTER BOTTOM AND CENTERED AT JOINT (TYP. EACH SIDE)

4"x3/8" IRON PLATE (FOR MULTIPLE CATCH BASINS ONLY - PROVIDE MIN. 6" SPACE BETWEEN MULTIPLE CASTINGS)

PROVIDE STEPS @ 12" TO 16" VERT. SEPARATION FOR STRUCTURES GREATER THAN 4' DEPTH: (24" MAX. FROM RIM TO FIRST STEP). SPECIFIC NEED, LOCATION AND SPECIFICATION OF STEPS TO BE DETERMINED BY LOCALITY.

9" CLASS A-3 CONCRETE TOP W/#4 BAR E.W. @ 6" O.C. POUR MONOLITHICALLY W/ 10' CURB & GUTTER EACH SIDE OF BASIN

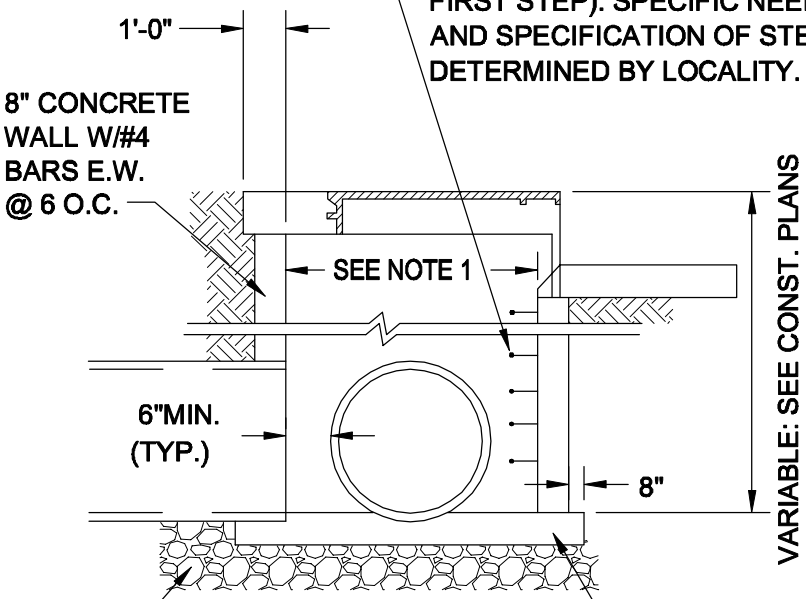

SECTION A-A

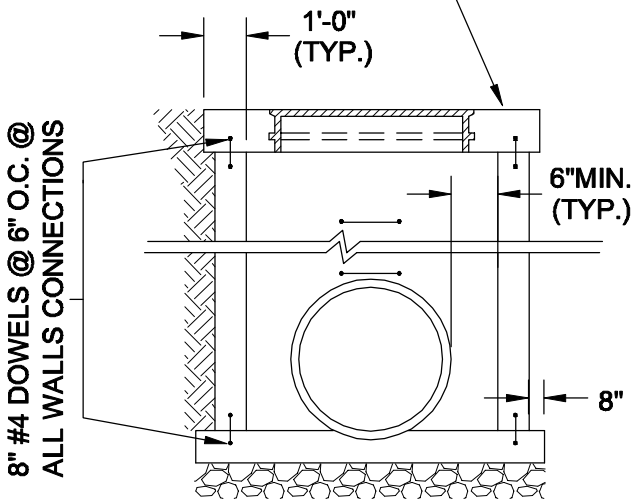

SECTION B-B

6" MIN. COMPACTED #57 STONE

8" CLASS A-3 CONCRETE BASE W/60-66 WIRE FABRIC (IN-PLACE CONSTRUCTION) OR #4 REBAR E.W. @ 12" O.C. (PRECAST CONSTRUCTION)

NOTES:

1. THE INTERIOR DIMENSIONS OF THE CATCH BASIN EQUAL 2'-6" FOR PIPE SIZES 12" THRU 18". WHERE THE PIPE SIZE IS 21" THRU 60", THE INTERIOR DIMENSIONS EQUAL 3'-0" OR THE O.D. OF THE PIPE, WHICHEVER IS GREATER, WHEN THE DEPTH DOES NOT EXCEED 4 FEET. IF THE DEPTH IS GREATER THAN 4 FEET, THE INTERIOR DIMENSIONS SHALL BE 4'-0" OR THE O.D. OF THE PIPE, WHICHEVER IS GREATER.

2. REFER TO THE VDOT ROAD AND BRIDGE STANDARDS, LATEST EDITION, - MANHOLE AND INLET SHAPING DETAIL.

CURB INLET/CATCH BASIN

NOT TO SCALE

REFERENCE	CATEGORY	DATE	SHEET No.	DETAIL No.
200,302	DRAINAGE STRUCTURES	12/10	1 OF 1	DS_04

HAMPTON ROADS
PLANNING DISTRICT COMMISSION
REGIONAL
CONSTRUCTION STANDARDS

PIPE SIZE	DIMENSION "X" (MIN.)
0"-24"	8"
27"-36"	12"
42"-72"	15"

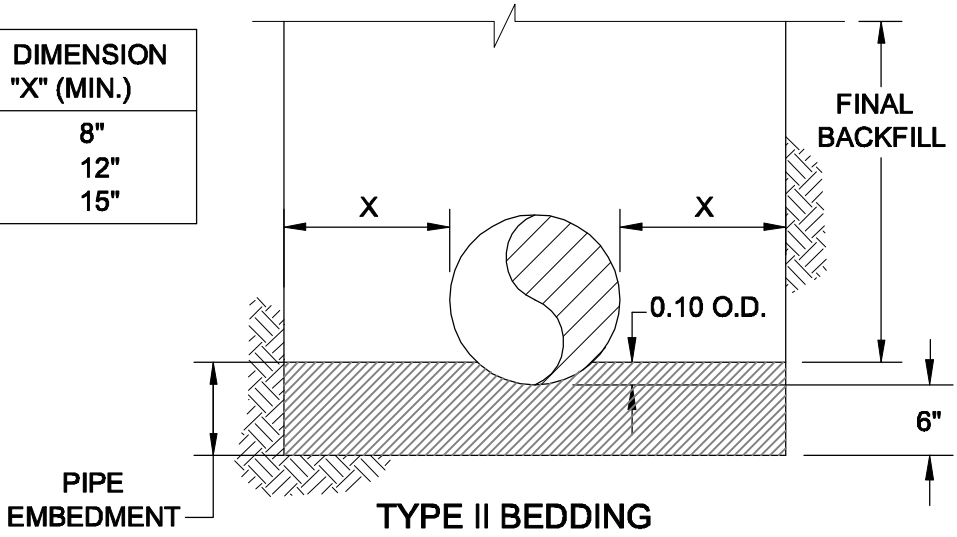

TYPE II BEDDING

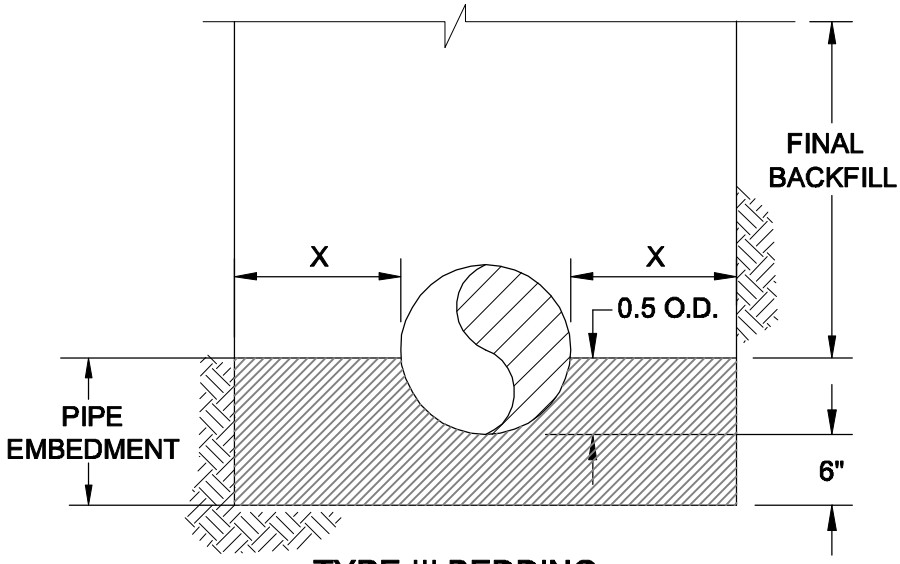

TYPE III BEDDING

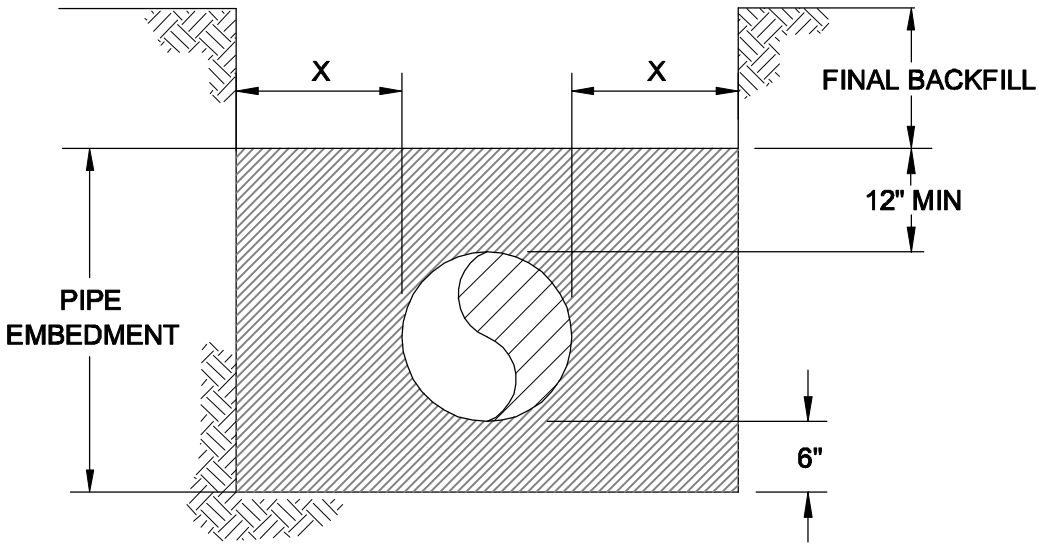

TYPE IV BEDDING

PIPE BEDDING DETAILS

NOT TO SCALE

REFERENCE	CATEGORY	DATE	SHEET No.	DETAIL No.
200,303	EARTHWORK	12/10	1 OF 2	EW_01

NOTES:

1. THESE BEDDING DETAILS ARE NOT INTENDED FOR THERMOPLASTIC STORM DRAINAGE PIPE
2. BEDDING MATERIAL TO BE APPROVED BY LOCALITY BEFORE USE.
3. TRENCH BOTTOM TO BE FREE OF WATER BEFORE PLACING BEDDING.
4. SHAPE RECESSES FOR BELL OF PIPE BY HAND.
5. BACKFILL ABOVE BEDDING WITH SPECIFIED BACKFILL MATERIAL. SEE SPECIFICATIONS SECTION 303.
6. REFER TO CONTRACT DOCUMENTS FOR TYPE OF BEDDING.
7. MINIMUM TRENCH WIDTH SHALL CONFORM TO PIPE MANUFACTURER'S RECOMMENDATIONS IF MORE STRINGENT.
8. TRENCH BOX OR OTHER SHORING METHODS SHALL NOT DISTURB PIPE EMBEDMENT AND BEDDING MATERIAL AFTER COMPACTION.
9. BEDDING SHALL BE INCLUDED IN THE PRICE OF THE PIPE UNLESS OTHERWISE INDICATED.

HAMPTON ROADS
PLANNING DISTRICT COMMISSION
REGIONAL
CONSTRUCTION STANDARDS

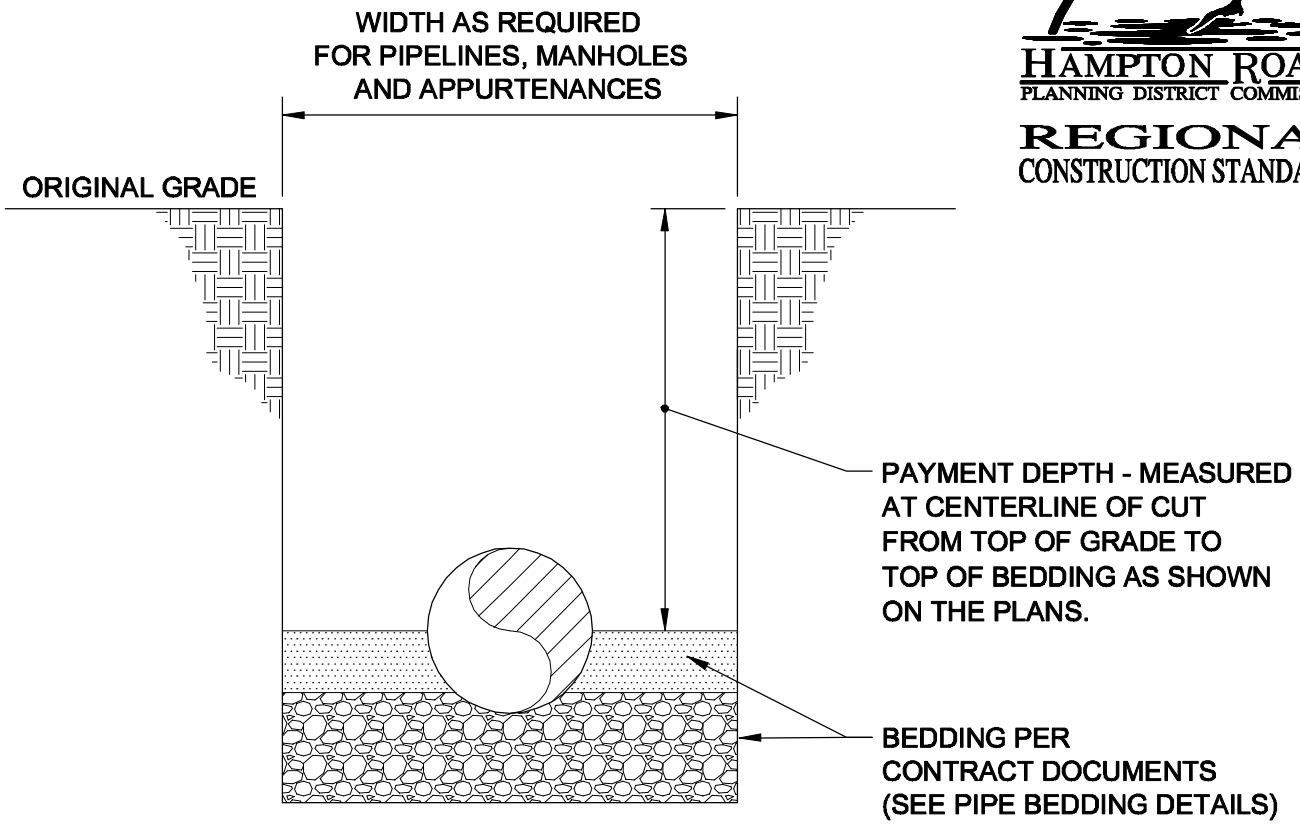

SECTION

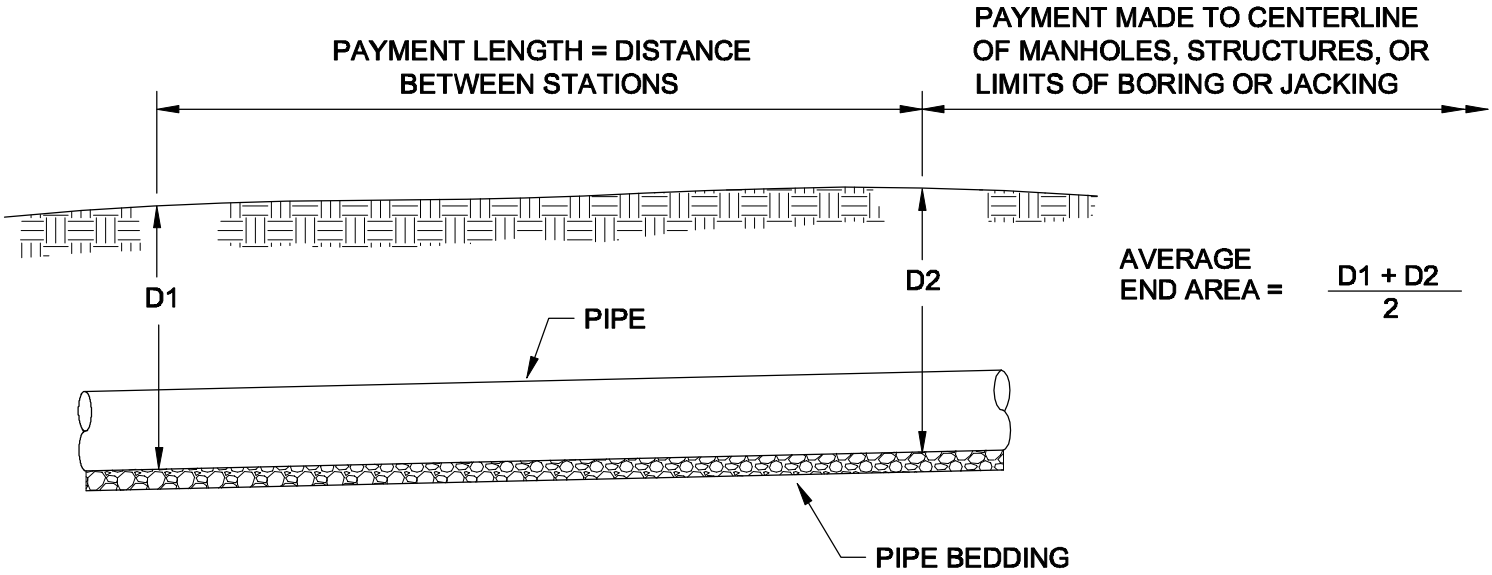

$$\text{AVERAGE END AREA} = \frac{D1 + D2}{2}$$

PROFILE

SEE EW_02, SHEET 2 0F 2 FOR NOTES.

PAYMENT LIMITS
TRENCH EXCAVATION AND BACKFILL

NOT TO SCALE

REFERENCE	CATEGORY	DATE	SHEET No.	DETAIL No.
200,303	EARTHWORK	12/10	1 OF 2	EW_02

HAMPTON ROADS
PLANNING DISTRICT COMMISSION
REGIONAL
CONSTRUCTION STANDARDS

NOTES:

1. PAYMENTS SHALL BE MADE USING THE AVERAGE END AREA METHOD AT THE UNIT COST PER FOOT, AT AVERAGE DEPTHS, AT 25' STATIONS BASED ON PLAN GRADES.

   EXAMPLE: D1 = 10.5 FT., D2 = 7.3 FT.

   $$\frac{D1 + D2}{2} = \frac{10.5 + 7.3}{2} = \frac{17.8}{2} = 8.9 \text{ FT.}$$

   PAYMENTS WOULD BE MADE AT THE UNIT PRICE BID FOR 8' TO 10' DEPTH FOR THIS 25 FOOT SECTION OF TRENCH EXCAVATION AND BACKFILL.

2. IN THE EVENT THE PAYMENT DEPTH SHALL EQUAL THE UPPER LIMIT OF PAYMENT CLASSIFICATION, PAYMENT WILL BE MADE AT THE LOWEST DEPTH UNIT PRICE (e.g. PAYMENT DEPTH = 10 FT.: PAYMENT WILL BE MADE AT THE UNIT PRICE FOR 8' TO 10' DEPTH, NOT AT THE UNIT PRICE FOR 10' TO 12' DEPTH).

PAYMENT LIMITS
TRENCH EXCAVATION AND BACKFILL

NOT TO SCALE

REFERENCE	CATEGORY	DATE	SHEET No.	DETAIL No.
200,303	EARTHWORK	12/10	2 OF 2	EW_02

PIPE SIZE	DIMENSION "E"
0"-24"	8"
27"-36"	12"
42"-72"	15"

DEPTH (FT.)	DIMENSION "W"*
0-4.99	2' OR O.D.+2E
5-9.99	4' OR O.D.+2E
10-13.99	5' OR O.D.+2E
14-20	7' OR O.D.+2E
OVER 20	SPECIAL DESIGN - SEE CONTRACT DOCUMENTS

HAMPTON ROADS
PLANNING DISTRICT COMMISSION
REGIONAL
CONSTRUCTION STANDARDS

* WIDTH FOR COMPUTING QUANTITIES OF SELECT FILL AND UNDERCUT (CONTINGENT ITEMS)
* FOR CONTINGENT ITEMS, "W" SHALL BE THE GREATER OF THE TWO DIMENSIONS LISTED.

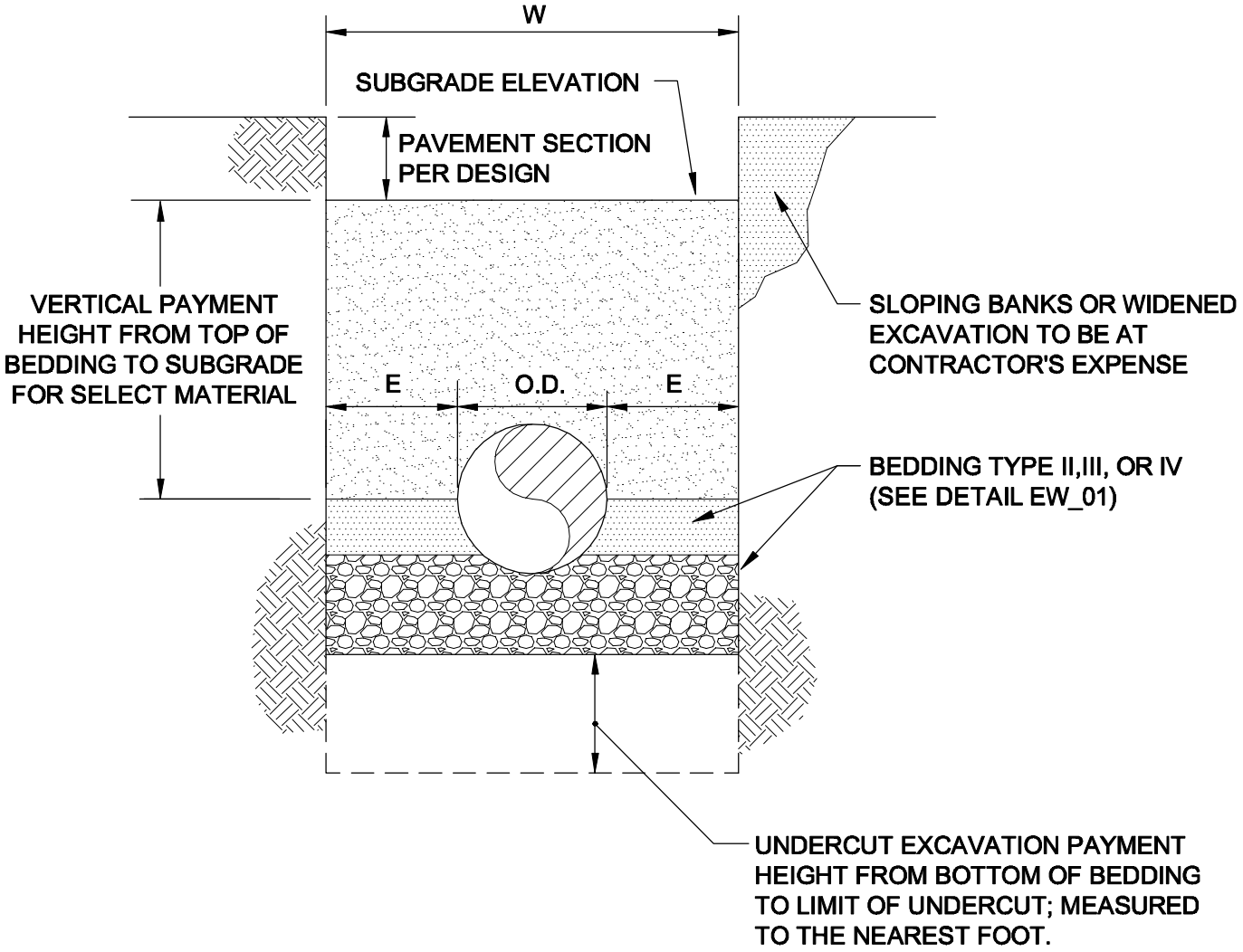

SEE EW_03, SHEET 2 0F 2 FOR ADDITIONAL NOTES.

TRENCH WIDTH DETAIL FOR PAYMENT OF CONTINGENT ITEMS

NOT TO SCALE

REFERENCE	CATEGORY	DATE	SHEET No.	DETAIL No.
200,303	EARTHWORK	12/10	1 OF 2	EW_03

HAMPTON ROADS
PLANNING DISTRICT COMMISSION
REGIONAL
CONSTRUCTION STANDARDS

NOTES:

1. "W" = MAXIMUM PAYMENT WIDTH FOR CONTINGENT ITEMS IN TRENCH EXCAVATION.

2. VOLUMES TO BE CALCULATED BY AVERAGE END AREA METHOD AS DESCRIBED IN EW_02 AND WIDTH ("W") AS DETERMINED IN EW_03.

3. NO ADDITIONAL PAYMENT WILL BE MADE FOR EXTRA WIDTH TO ACCOMMODATE MANHOLES OR OTHER APPURTENANCES.

4. MEASUREMENT OF LENGTH TO BE ALONG CENTERLINE OF PIPE FROM START TO FINISH OF CONTINGENT ITEM.

5. CONTINGENT ITEMS INCLUDE SELECT MATERIAL, SELECT BEDDING AND UNDERCUT EXCAVATION.

6. TONNAGE FOR CONTINGENT ITEMS SHALL BE COMPUTED USING THE UNIT WEIGHTS AS SPECIFIED FOR THE TYPE OF MATERIAL WITH VOLUMES DERIVED AS FOLLOWS:
   #57 STONE = 100 LBS./CUBIC FOOT
   #21A, 21B, OR 26 STONE = 138 LBS./CUBIC FOOT
   SAND (VDOT GRADE A) = 110 LBS./CUBIC FOOT

TRENCH WIDTH DETAIL FOR PAYMENT OF CONTINGENT ITEMS

NOT TO SCALE

REFERENCE	CATEGORY	DATE	SHEET No.	DETAIL No.
200,303	EARTHWORK	12/10	2 OF 2	EW_03

HAMPTON ROADS
PLANNING DISTRICT COMMISSION
REGIONAL
CONSTRUCTION STANDARDS

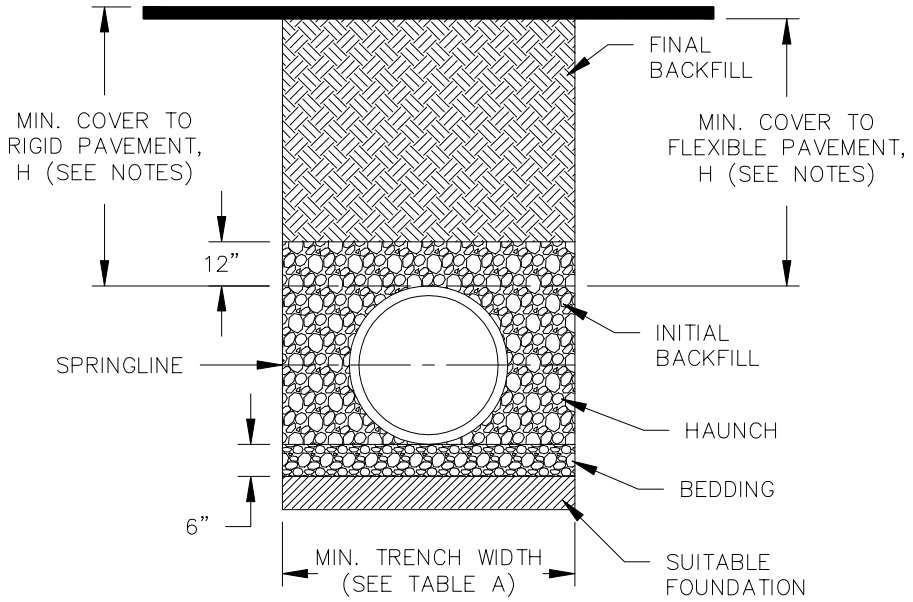

TABLE A- RECOMMENDED MINIMUM TRENCH WIDTHS	
PIPE DIAM.	MIN. TRENCH WIDTH
4"	21"
6"	23"
8"	26"
10"	28"
12"	30"
15"	34"
18"	39"
24"	48"
30"	56"
36"	64"
42"	72"
48"	80"
54"	88"
60"	96"

TABLE B- RECOMMENDED MAXIMUM HEIGHT OF COVER		
PIPE DIAMETER INCHES	AREA SQ. FT.	MAXIMUM HEIGHT OF COVER FEET
12	0.8	21
15	1.2	21
18	1.8	20
24	3.1	20
30	4.9	19
36	7.1	18
42	7.1	18
48	7.1	17

TABLE C- RECOMMENDED MINIMUM HEIGHT OF COVER DURING CONSTRUCTION	
PIPE DIAMETER	MINIMUM COVER HEIGHT DURING CONSTRUCTION
12" TO 30"	18"
36" AND ABOVE	1/2 DIAMETER

TABLE D MINIMUM RECOMMENDED COVER BASED ON RAILWAY LOADING CONDITIONS **	
PIPE DIAM.	COOPER E-80***
UP TO 24"	24"
30"-36"	36"
42"-60"	48"

** COVER IS MEASURED FROM TOP OF PIPE TO BOTTOM OF RAILWAY TIE.
*** E-80 COVER REQUIREMENTS, ARE ONLY APPLICABLE TO ASTM F 2306 PIPE.

TYPICAL TRENCH DETAIL FOR HDPE (TYPE S) STORM DRAIN PIPE

NOT TO SCALE

REFERENCE	CATEGORY	DATE	SHEET No.	DETAIL No.
200, 302, 303	EARTHWORK	12/10	1 OF 2	EW_04

HAMPTON ROADS
PLANNING DISTRICT COMMISSION

REGIONAL
CONSTRUCTION STANDARDS

NOTES:

1. ALL PIPE SYSTEMS SHALL BE INSTALLED IN ACCORDANCE WITH THESE SPECIFICATIONS OR AS MODIFIED BY THE OWNER.

2. TRENCH BOX OR OTHER SHORING METHODS SHALL NOT DISTURB THE PIPE BEDDING AND BACKFILL MATERIALS AFTER THEIR COMPACTION.

3. WHERE THE TRENCH BOTTOM IS UNSTABLE, THE CONTRACTOR SHALL EXCAVATE TO A DEPTH INDICATED ON THE DRAWINGS OR AS DIRECTED BY THE OWNER AND REPLACE WITH BEDDING MATERIAL.

4. BEDDING MATERIAL SHALL BE CRUSHED STONE OR VDOT NO. 57 STONE IN ACCORDANCE WITH SPECIFICATION SECTION 303 UNLESS OTHERWISE NOTED ON THE DRAWINGS OR REQUIRED BY THE OWNER. MINIMUM BEDDING THICKNESS SHALL BE 6-INCHES.

5. BACKFILL MATERIAL SHALL CONFORM TO THE FOLLOWING:
   A. INITIAL BACKFILL:
      VDOT AGGREGATE NO. 25, 26, 21A OR 21B; AS INDICATED ON THE DRAWINGS OR AS DIRECTED BY THE OWNER, SHALL BE INSTALLED AS INITIAL BACKFILL IN THE PIPE ZONE EXTENDING NOT LESS THAN 12-INCHES ABOVE THE CROWN OF PIPE. MATERIAL SHALL BE INSTALLED AS REQUIRED IN ASTM D2321, LATEST EDITION.
   B. FINAL BACKFILL:
      FINAL BACKFILL MATERIALS SHALL BE THE SAME AS THE INITIAL BACKFILL UNLESS OTHERWISE INDICATED ON THE DRAWINGS OR DIRECTED BY THE OWNER.

6. MINIMUM COVER (H):

   TRAFFIC APPLICATIONS – MINIMUM COVER SHALL BE 24-INCHES, UNLESS MODIFIED BY THE LOCALITY, FOR UP TO 60-INCH DIAMETER PIPE, MEASURED FROM THE TOP OF THE PIPE TO THE BOTTOM OF FLEXIBLE PAVEMENT OR TO THE TOP OF RIGID PAVEMENT.

   NON-TRAFFIC APPLICATIONS – MINIMUM COVER IN GRASS OR LANDSCAPE AREA IS 12-INCHES FROM THE TOP OF THE PIPE TO GROUND SURFACE.

   ENTRANCES – THE MINIMUM FINISHED COVER IS 9-INCHES FOR PIPE DIAMETERS LESS THAN OR EQUAL TO 24-INCH. FOR PIPE DIAMETERS GREATER THAN 24-INCHES, THE MINIMUM COVER SHALL BE 12-INCHES OR 1/8 THE PIPE DIAMETER, WHICHEVER IS GREATER. WHERE THE SURFACE OVER THE TOP OF THE PIPE WILL BE ASPHALT, A MINIMUM OF 6-INCHES OF SELECT BACKFILL MATERIAL SHALL BE PLACED BETWEEN THE TOP OF THE PIPE AND THE BOTTOM OF THE ASPHALT.

TYPICAL TRENCH DETAIL FOR HDPE (TYPE S) STORM DRAIN PIPE

NOT TO SCALE

REFERENCE	CATEGORY	DATE	SHEET No.	DETAIL No.
200, 302, 303	EARTHWORK	12/10	2 OF 2	EW_04